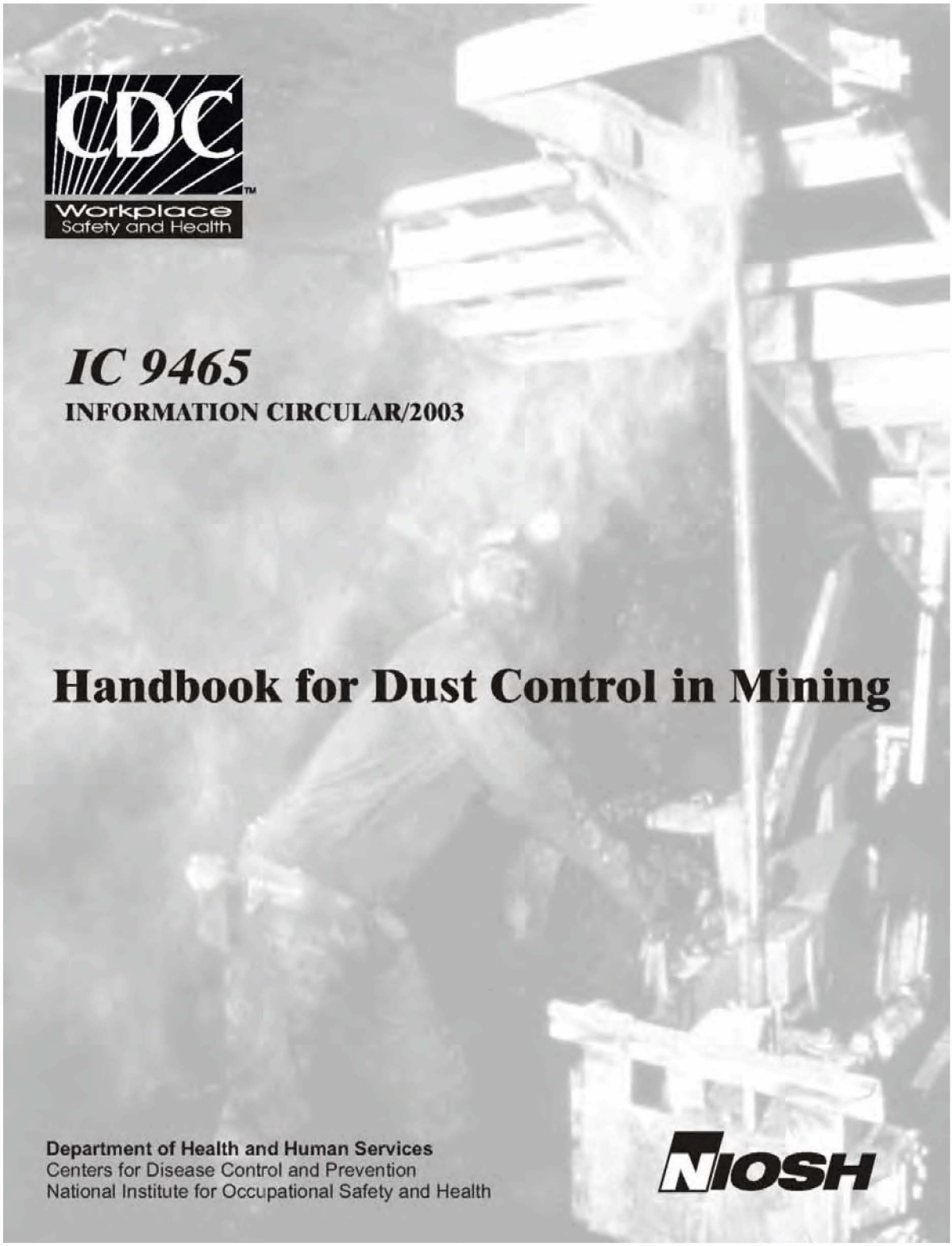

CDC Workplace Safety and Health

IC 9465

INFORMATION CIRCULAR/2003

Handbook for Dust Control in Mining

Department of Health and Human Services
Centers for Disease Control and Prevention
National Institute for Occupational Safety and Health

NIOSH

Information Circular 9465

Handbook for Dust Control in Mining

By Fred N. Kissell, Ph. D.

U.S. DEPARTMENT OF HEALTH AND HUMAN SERVICES
Public Health Service
Centers for Disease Control and Prevention
National Institute for Occupational Safety and Health
Pittsburgh Research Laboratory
Pittsburgh, PA

June 2003

ORDERING INFORMATION

Copies of National Institute for Occupational Safety and Health (NIOSH) documents and information about occupational safety and health are available from

NIOSH-Publications Dissemination
4676 Columbia Parkway
Cincinnati, OH 45226-1998

FAX: 513-533-8753
Telephone: 1-800-35-NIOSH
(1-800-553-4674)
E-mail: pubstaft@cdc.gov
Web site: www.cdc.gov/niosh

This document is in the public domain and may be freely copied or reprinted.

Disclaimer: Mention of any company or product does not constitute endorsement by NIOSH.

DHHS (NIOSH) Publication No. 2003-147

CONTENTS

Page

About this handbook 1
Acknowledgments 1
Chapter 1.—Dust control methods in tunnels and underground mines 3
Chapter 2.—Continuous miner and roof bolter dust control 23
Chapter 3.—Longwall dust control 39
Chapter 4.—Dust control in stone mines 57
Chapter 5.—Surface mine dust control 73
Chapter 6.—Underground hard-rock dust control 83
Chapter 7.—Control of dust in hard-rock tunnels 97
Chapter 8.—How to find the major dust sources 109
Chapter 9.—Dust respirators in mines and tunnels 119
Index 129

ILLUSTRATIONS

1-1. Rollback of dust resulting from nonuniform airflow 5
1-2. A half-curtain raises the air velocity to confine the dust cloud 6
1-3. Falling material drags air with it, so air must be extracted at the high-pressure side of the transfer point 7
1-4. Spray-generated airflow carries dust back to the shearer operator 9
1-5. Water spray test that can lead to overrating spray effectiveness 10
1-6. Airborne capture performance of four types of spray nozzles 11
2-1. Machine-mounted scrubber design 24
2-2. Dust scrubber used with blowing ventilation 26
2-3. Excessive air blown toward the face will cause dust to bypass the scrubber inlets 27
2-4. Dust scrubber used with exhaust ventilation 28
2-5. Half-curtain location 31
2-6. Modified cutting cycle 32
2-7. Antirollback water spray system 33
3-1. Longwall dust sampling locations 40
3-2. Gob curtain forces air to stay on longwall face 44
3-3. Typical respirable dust concentration profile around the shearer during the tail-to-head pass 45
3-4. Air currents when using the shearer-clearer system 46
3-5. Support dust in the walkway dilutes as it moves downwind 48
3-6. Airflow at longwall headgate with a wing curtain 48
3-7. Transparent mesh partition retards the spread of shearer dust into the walkway 51
4-1. Conceptual approach to controlling crusher dust in a stone mine 60
4-2. Jet fan ventilating a single straight heading 63
4-3. Jet fan entrainment of mine air 64
4-4. Multiple headings a few crosscuts away from a fresh air pathway 66
4-5. Airflows obtained with jet fan in operation 67
4-6. Stopping built from damage-resistant brattice 69
5-1. Corner flaps added to a deck shroud to reduce leakage 75
5-2. A circular shroud that can be raised and lowered improves dust collection efficiency 76
6-1. Ore pass adjacent to steeply dipping ore body 84
6-2. Wetting the top surface of the bottom belt 87
6-3. Wetting both surfaces of the bottom belt 88
6-4. Dust-laden air exhausted from transfer point enclosure 89
6-5. Effect of duct inlet position, air velocity, and air curtain use on dust levels 92
7-1. Results from a dust concentration survey 98
7-2. Dust concentration measured near cutter head with TBM idle and operating 99
7-3. Auxiliary, or scavenger, system with adequate overlap 100
7-4. Auxiliary, or scavenger, system with no overlap 101

CONTENTS—Continued

7-5. Loss of ventilation efficiency from mismatched airflow directions 101
7-6. Zone of low air movement is created because ducts have similar air quantities moving in opposite directions 102
7-7. TBM dust collection system 102
8-1. Mist eliminator for direct-reading instruments that use light scattering 111
8-2. Two gob-to-spillplate dust concentration gradients measured downwind of a longwall shearer 113
8-3. Air in return diluted by line curtain leakage 114
8-4. Cyclone shield for high-velocity air streams 115
9-1. Half-mask replaceable-filter respirator 122
9-2. Dust mask, also called a filtering facepiece 123
9-3. Air helmet 124

TABLES

3-1. Dust source contribution values from 13 longwalls 41
4-1. Results of jet fan studies 64
4-2. Cost and leakage of five types of stone mine stoppings 70
4-3. Pressure drop in stone mine airways 70

UNIT OF MEASURE ABBREVIATIONS USED IN THIS REPORT

cfm	cubic foot per minute	m	meter
ft	foot	m^3	cubic meter
ft^2	square foot	mg	milligram
ft/min	foot per minute	mg/m^3	milligram per cubic meter
gpm	gallon per minute	mg/sec	milligram per second
hr	hour	min	minute
in	inch	mm	millimeter
in w.g.	inch water gauge	µm	micrometer
lb	pound	psi	pound (force) per square inch
L/min	liter per minute	sec	second

HANDBOOK FOR DUST CONTROL IN MINING

Fred N. Kissell, Ph.D.,[1] Editor

ABOUT THIS HANDBOOK

This handbook describes effective methods for the control of mineral dusts in mines and tunnels. It assumes the reader is familiar with mining. The first chapter deals solely with dust control methods, regardless of the application. It is a brief tutorial on mining dust control and will be of help to the reader whose dust control problem does not conveniently fit any of the mining equipment niches described in later chapters.

The subsequent chapters describe dust control methods for different kinds of mines and mining equipment. This includes underground coal and hard-rock mines, as well as surface mines, stone mines, and hard-rock tunnels. Because dust sampling has so many pitfalls, a chapter on methods used to sample dust is included. For those occasions when there is no practical engineering control, a chapter on respirators is also included.

Except for those listed as “future possibilities” in the longwall chapter, the dust control methods described are practical and cost-effective for most mine operators.

If controlling dust were a simple matter, dust problems in tunnels and mines would have been eradicated years ago. Unfortunately, most underground dust control methods yield only 25% to 50% reductions in respirable-sized dust. Often, 25% to 50% reductions are not enough to achieve compliance with dust standards. Thus, mine operators must use several methods simultaneously, usually without knowing for sure how well any individual method is working. In fact, given a 25% error in dust sampling and day-to-day variations in dust generation of 50% or more, certainty about which control methods are most effective can be wanting. Nevertheless, over the years, some consensus has emerged on the best dust control practices. This handbook summarizes those practices.

---

[1]Research physical scientist, Pittsburgh Research Laboratory, National Institute for Occupational Safety and Health, Pittsburgh, PA.

ACKNOWLEDGMENTS

Parts of this handbook were previously published in the *Journal of the Mine Ventilation Society of South Africa* and *Tunnel Business Magazine*. Much credit is also due to Joe Schall, the Giles Writer-in-Residence at The Pennsylvania State University, who helped to transform the awkward prose of the authors into something more readable.

CHAPTER 1.—DUST CONTROL METHODS IN TUNNELS AND UNDERGROUND MINES

By Fred N. Kissell, Ph.D.[2]

In This Chapter

- ✓ Ventilation: dilution and displacement
- ✓ Water sprays: wetting and airborne capture
- ✓ Water additives: foam and wetting agents
- ✓ Dust collectors: filtration efficiency and inlet capture efficiency
- ✓ Reducing the generation of dust for cutting, drilling, blasting, crushing, and conveying

This chapter will give you a general perspective on what works or doesn't work. The chapter will also help if your dust control problem doesn't fit any of the circumstances described in later chapters.

This chapter describes the three major control methods used to reduce airborne dust in tunnels and underground mines: ventilation, water, and dust collectors. It also describes methods to reduce the generation of dust, so less has to be removed from the mine air.

The ventilation methods provide the best use of air in the vicinity of workers and in the vicinity of dust sources. In this sense, the methods described are local ventilation methods. Most of the emphasis is on so-called displacement ventilation because it is the most effective dust control technique available.

The section on water sprays outlines the dual role of sprays—wetting and airborne capture—and describes why wetting is more important. It also corrects some of the misconceptions about spray effectiveness and describes circumstances where sprays can actually *increase* the dust exposure of workers.

The section on dust collectors outlines the circumstances under which dust collectors can be expected to function effectively. It also describes some common design and maintenance problems.

The final section describes how to reduce the amount of dust that gets into the air in the first place, since once the dust is airborne it is always harder to control.

---

[2]Research physical scientist, Pittsburgh Research Laboratory, National Institute for Occupational Safety and Health, Pittsburgh, PA.

VENTILATION

Ventilation air reduces dust by dilution and by displacement. Displacement ventilation is far more effective, but it is harder to implement. Several examples of displacement ventilation are provided.

This section describes local ventilation methods for dust control. Ventilation air reduces dust through both dilution and displacement. The dilution mechanism operates when workers are surrounded by a dust cloud and additional air serves to reduce the dust concentration by diluting the cloud. The displacement mechanism operates when workers are upwind of dust sources and the air velocity is high enough to reliably keep the dust downwind.

Dilution Ventilation. The basic principle behind dilution ventilation is to provide more air and dilute the dust. Most of the time the dust is reduced roughly in proportion to the increase in airflow, but not always. The cost of and technical barriers to increased airflow can be substantial, particularly where air already moves through ventilation ductwork or shafts at velocities of 3,000 ft/min or more.

Displacement Ventilation. The basic principle behind displacement ventilation is to use the airflow in a way that confines the dust source and keeps it away from workers by putting dust downwind of the workers. Every tunnel or mine passage with an airflow direction that puts dust downwind of workers uses displacement ventilation. In mines, continuous miner faces or tunnel boring machines on exhaust ventilation use displacement ventilation. Enclosure of a dust source, such as a conveyor belt transfer point, along with extraction of dusty air from the enclosure, is another example of displacement ventilation.

Displacement ventilation can be hard to implement. However, if done well, it is the most effective dust control technique available, and it is worth considerable effort to get it right. The difficulty is that when workers are near a dust source, say, 10 to 20 ft from the source, keeping them upwind requires a substantial air velocity, typically between 60 and 150 ft/min. There is not always enough air available to achieve these velocities.

To compensate for the lack of air, two techniques are used. The first is to reduce the cross-sectional area of the air course between the worker and the dust source. This confines the dust source by raising the air velocity. Second, the turbulence of the dust source is reduced. A turbulent dust source creates dusty eddy currents of air that back up against the airflow and push upwind toward the worker. When the dust source is less turbulent, less air is required to confine the dust cloud. The best way to illustrate displacement ventilation is to consider four specific mining examples.

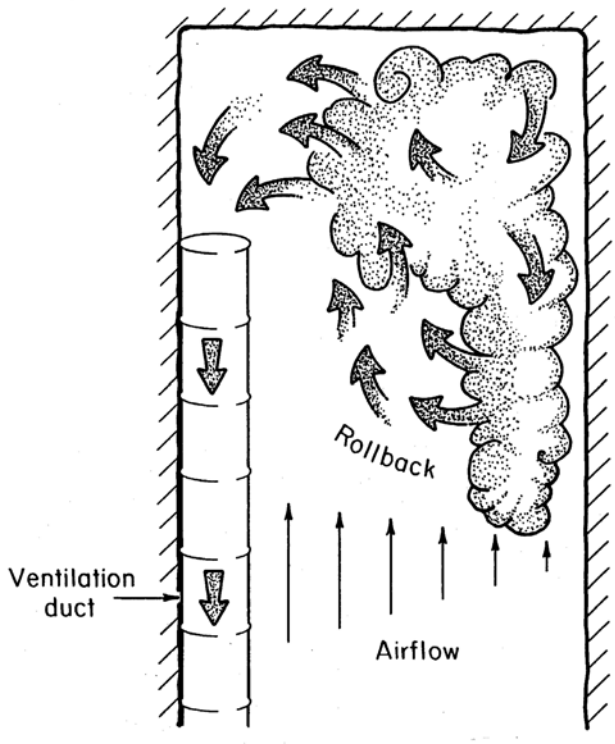

Figure 1-1.—Rollback of dust resulting from non-uniform airflow.

Example No. 1: Continuous miner faces on exhaust ventilation.—To confine the dust cloud at continuous miner faces, U.S. coal mine ventilation regulations require an average air velocity of 60 ft/min. This velocity is based on the entry cross-section without considering the area blocked by the equipment. However, 60 ft/min is a bare minimum, as it has been shown that 120 ft/min is required for good dust control [USBM 1985]. This relatively high air velocity is required because a typical coal mine entry is about 18 ft wide, and over this width the air velocity is not uniform. The air velocity is much higher on the side next to the ventilation duct, as shown in figure 1-1. Air turbulence created by the machine water sprays causes the dust cloud at the cutting face to expand and back up against the weaker airflow on the side opposite the ventilation duct. In mining, this is called rollback. It is surprising how far dust can roll back to contaminate the incoming air breathed by mine workers.

Rollback can be reduced by increasing the airflow. The air turbulence that causes rollback can be reduced by lowering the spray water pressure and aligning spray nozzles so that they are confined only to spray on the broken coal. Also, in high coal where the cross-sectional area is very large, a half-curtain in the entry is helpful. This curtain, shown in figure 1-2, is placed between the mining machine and the right or left rib, whichever is farthest from the mining machine [Jayaraman et al. 1986]. A half-curtain reduces the cross-sectional area of the entry and raises the air velocity to confine the dust cloud.

In addition to the half-curtain, there are many possible mining applications where a temporary curtain or screen can be used to channel airflow or raise the air velocity to keep nearby workers upwind of a dust source.

Example No. 2: Closed-face tunnel boring machine (TBM).—Cutter heads of hard-rock tunnel boring machines operate in what most would regard as an enclosed space. However, Myran [1985] has published recommended air quantities needed to confine dust to the cutter head space, and they are high. For example, a 20-ft-diam TBM requires 12,000 to 17,000 cfm. Why such high airflow for what is presumably an enclosed space? First, the stirring action of the large rotating cutter head creates a considerable amount of air turbulence. Second, there is far less enclosure of the cutter head than a casual inspection of a TBM would indicate. Depending on the TBM design, the entire belt conveyor access space can be open. Also, there is considerable open space when the grippers at the head expand to press out against the tunnel walls. Dust reduction efforts have focused on reducing the open space available for dust leakage by

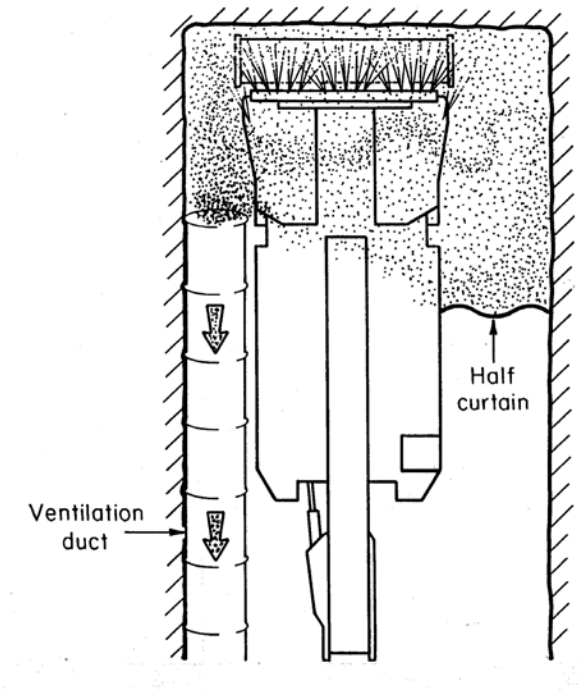

Figure 1-2.—A half-curtain raises the air velocity to confine the dust cloud.

enclosing the conveyor tunnel and by installing single or even double sets of rubber dust seals between the grippers and TBM body.

Example No. 3: Conveyor belt transfer point enclosure.—In addition to maintaining high airflow, sometimes it is necessary to extract the air at the right location in order to adequately confine dust. Figure 1-3 shows a conveyor transfer point enclosure. The design of this and similar enclosures used in materials transport has been well worked out [Goldbeck and Marti 1996; Swinderman et al. 1997]. In principle, a high degree of enclosure is possible, so even moderate airflow extracted from the enclosure should keep dust inside. However, the falling material drags air with it, creating an unbalanced pressure in the enclosure that pushes dust out of the high pressure end of the enclosure. The most effective designs address this issue by locating the exhaust port at the high-pressure end and exhausting sufficient air. Other designs incorporate steps to break the fall of the rock and thus diminish the amount of air moved. However, if the dust seals along the belt and the rubber flaps at the end of the enclosure are worn or missing, even the best designs available will leak dust.

Example No. 4: Dust avoidance measures.—Dust avoidance refers to moving either the dust cloud or the workers so that the workers are upwind of the dust. The use of remote control on coal mining machinery is the best example of dust avoidance in mining. On longwall shearers, remote control has enabled the shearer operators to move upwind 15-20 ft and avoid direct contact with the dust cloud coming off the headgate-end shearer drum, which reduces their dust exposure by 68% [USBM 1984]. On continuous miners, remote control has enabled the operator to step back toward the intake by about 12 ft and reduce his or her dust exposure level by 50% or more [Divers et al. 1982].

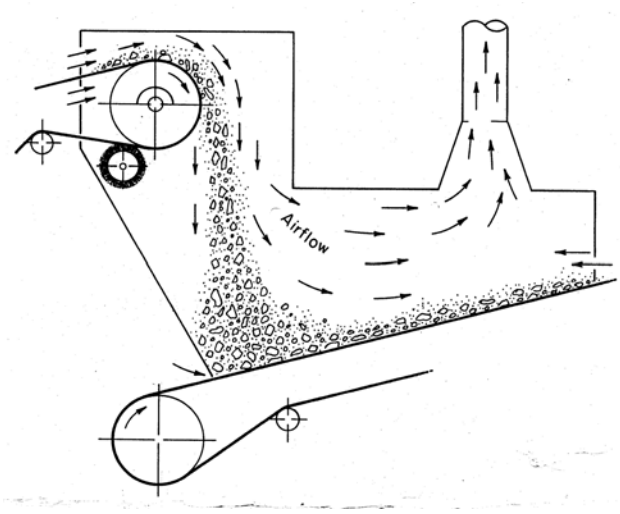

Figure 1-3.—Falling material drags air with it, so air must be extracted at the high-pressure side of the transfer point.

Sometimes, it is possible to move the dust cloud or at least its outer edge. On longwall shearers, the so-called "shearer-clearer" system uses the air-moving capacity of water sprays to hold the dust cloud against the face and prevent it from moving out into the walkway. This can reduce worker dust exposure by 50% [Shirey et al. 1985].

When workers are at the edge of a dust cloud, a small shift in the location of the workers or the location of the cloud can yield large benefits. However, if workers are in the middle of a dust cloud, dust avoidance has less chance of success because the distance moved must be greater.

WATER SPRAYS

When using water sprays, focus on uniform wetting more than airborne capture.

The role of water sprays in mining is a dual one: (1) wetting of the broken material being transported and (2) airborne capture. Of the two, wetting of the broken material is far more effective.

Wetting. Adequate wetting is extremely important for dust control. The vast majority of dust particles created during breakage are not released into the air, but stay attached to the surface of the broken material [Cheng and Zukovich 1973]. Wetting this broken material ensures that the dust particles stay attached. As a result, adding more water can usually (but not always) be counted on to reduce dust [Jankowski and Organiscak 1983; Ruggieri and Jankowski 1983; Zimmer et al. 1987]. For example, coal mine operators have been able to reduce the dust from higher longwall production levels by raising the shearer water flow rate to an average of 100 gpm [Colinet et al. 1997]. Compared to the amount of coal mined, on a weight basis, this 100 gpm is equivalent to 1.9% added moisture from the shearer alone. Unfortunately, excessive moisture levels can also result in a host of materials handling problems, operational headaches, and product quality issues, so an upper limit on water use is sometimes reached rather quickly. As a result, an alternative to simply adding more water is to ensure that the broken material is being wetted uniformly.

Uniformity of wetting was recognized as an important issue long ago by Hamilton and Knight [1957], who measured the amount of dust generated by dropping coal. By far the best dust reductions came from prespraying the coal with water and then mechanically mixing the coal and water together to achieve a uniformity of wetting. Subsequent mining experience has confirmed this. For example, releasing water at the cutting picks of rotating shearer drums has proven to be far more effective at suppressing longwall dust than using external sprays on the shearer body. This is because water released at the cutting picks gets mixed in with the broken coal, whereas water from external sprays usually provides just surface wetting.

Increasing the number of sprays is another way to promote uniformity of wetting. Bazzanella et al. [1986] showed that dust suppression is improved by increasing the number of sprays on a shearer drum even when the total water flow and nozzle pressure were held constant with the use of smaller orifice nozzles. When 46 smaller orifice nozzles were substituted for the 17 original nozzles, dust was reduced by 60%. This is better than the dust reduction given by most dust control techniques.

The benefits of improved mixing and uniformity of wetting have also been obtained with foam, with far greater effectiveness when the foam was mechanically mixed in with the coal [Mukherjee and Singh 1984] or mechanically mixed with silica sand [Volkwein et al. 1983].

The lessons from this knowledge about the use of water are twofold. First, it is best to wet the material fully during the breakage process. This is when most mechanical mixing is likely to take place. Wetting during breakage ensures that the benefits will carry over to any downstream secondary handling operation. Second, uniformity of wetting is best achieved by using more nozzles at lower flow rates and ensuring that the nozzles are aimed at the broken material rather than just spraying into the air and wetting an adjacent metal or rock surface.

While it is always best to aim sprays at broken material, circumstances dictate the impracticality of locating spray nozzles where they might be easily damaged. For example, spray nozzles under the boom of a continuous miner are more effective than those on the top of the boom [Matta 1976]. However, top nozzles are more commonly used because sprays under the boom are damaged more often and are harder to maintain.

Airborne capture. Under actual mining conditions, the typical water spray operating at 100 psi and 1-2 gpm gives no more than 30% airborne capture of respirable dust[3] [Courtney and Cheng 1977]. This is not as good as lab tests [Tomb et al. 1972] would lead one to believe. In lab tests, the

[3]The author is aware of one notable exception to this 30% rule: water blast sprays in metal mines. These sprays, using a combination of water and compressed air, were first used many years ago to reduce dust in metal mine headings after blasting. Brown and Schrenk [1938] saw dust reductions of 90%-99% from water blast sprays within 15 min after blasting. The reason for the difference (90%-99% instead of 30%) is that the water blast sprays had 15 min to work on a single-event dust cloud confined to the end of the heading. Most of the dust in the cloud recirculated through the sprays again and again, whereas in most modern mining applications the dust cloud is generated continuously, and the dust only gets one pass of a few seconds through the sprays. This explains the 30% spray effectiveness in modern mining applications. In more recent years, McCoy et al. [1985] measured the effectiveness of water spray nozzles using a closed chamber in which a single-event dust cloud was recirculated again and again through a spray. In a few minutes, the dust level was reduced by 90%, confirming the earlier observations of Brown and Schrenk, and others [van der Bank 1977].

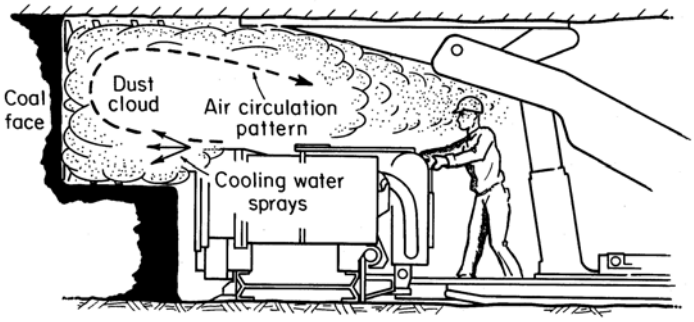

Figure 1-4.—Spray-generated airflow carries dust back to the shearer operator.

sprays were usually confined in a duct, and all of the dust was forced to pass through the spray. However, under actual mining conditions, dust clouds are unconfined. In all sprays, the moving droplets exert drag on the adjacent air; thus, sprays act to move the air. Because of this air entrainment effect, if a spray is aimed at an unconfined dust cloud, it will carry in air that spreads the cloud, thus making capture by the spray less efficient.

Aside from making sprays less efficient, the air entrainment of sprays can create other problems. Figure 1-4 shows how some sprays on a longwall shearer actually raise the shearer operator=s dust level. For many years, it was a common practice to discharge the motor-cooling water by aiming it at the coal face under the theory that it would capture some airborne dust. Although some dust was captured, a considerable airflow toward the coal face was also created. That airflow, upon reaching the coal face, simply turned around and carried the rest of the dust cloud, formerly confined to the face, back over the operator. Perhaps one-fourth of the cloud was captured, but the remaining three-fourths was blown back over the operator, raising the operator's dust level threefold [USBM 1981].

Air entrainment of sprays can also lead to overrating their effectiveness. Figure 1-5 shows a conceptual example. A dust cloud is generated by a dust source, such as a belt transfer point, and the cloud surrounds much of the dust source (figure 1-5, left). A water spray is aimed at the cloud, and a dust sampler located on or near the source shows a substantial dust reduction when the spray is turned on. Most of this dust reduction is actually caused by the air currents induced by the water spray, which dilute and blow away much of the dust cloud (figure 1-5, right). Normally, this dust reduction would be misinterpreted as airborne capture by the spray droplets.

A flawed spray application that appears in all types of mines is the so-called "water curtain." It is based on the incorrect notion that dust particles passing across a barrier row of sprays will always be captured.

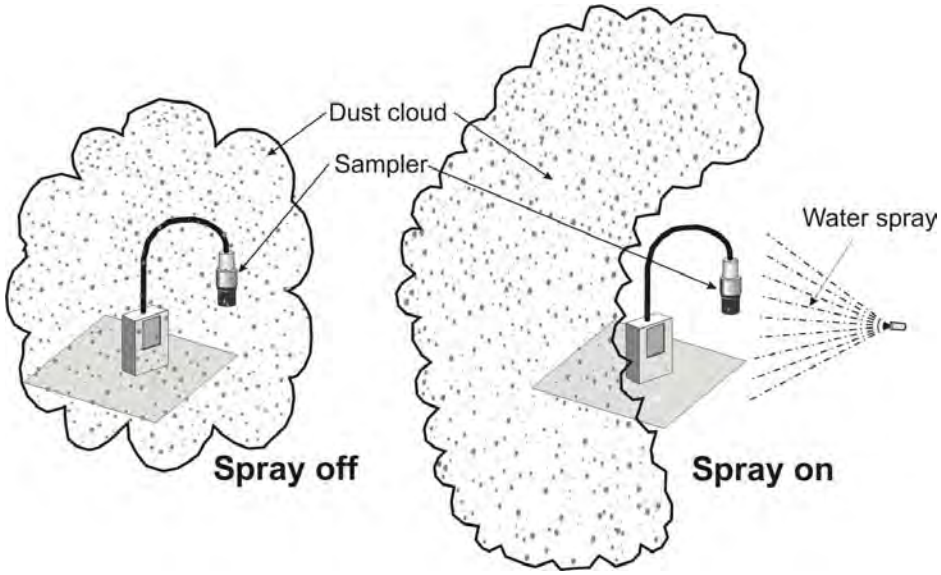

Figure 1-5.—Water spray test that can lead to overrating spray effectiveness.

Attempts to improve the airborne capture efficiency of sprays have not met with practical success. One approach has been to reduce droplet size, based on the notion that capture by smaller droplets is more efficient. This effort has included atomizing or fog sprays, steam, sonically atomized sprays, compressed air-atomized sprays, and electrically charged atomized sprays [Bigu and Grenier 1989; McCoy et al. 1983]. These methods usually offer somewhat better dust capture and some economy in the use of water, but have many disadvantages that prevent their use in mining. Nozzles with very small orifices are more prone to clogging. Fine droplets are likely to evaporate quickly and release captured dust along with the minerals that had been dissolved in the water [McCoy et al. 1983].

Sprays that use less water fall short in the more important role of wetting the broken material.

Despite the limitations of sprays, proper nozzle selection can enhance their use. Figure 1-6 shows the airborne capture performance of some common spray nozzle types at different pressures. Atomizing sprays are the most efficient. Hollow-cone sprays are a close second and are the best choice for practical mining applications because they have larger orifice nozzles and are less likely to clog. Flat fan sprays are more appropriate for spraying into a narrow rectangular space because less water is wasted by spraying against an adjacent rock or metal surface.

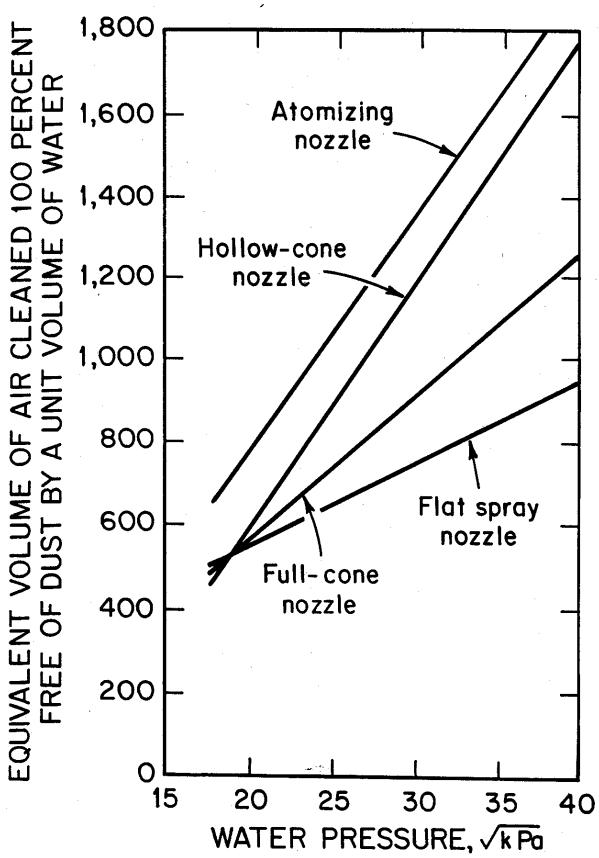

Figure 1-6.—Airborne capture performance of four types of spray nozzles.

High-pressure sprays. One way to improve sprays is to raise the water pressure. This raises the efficiency per unit use of water, as shown in figure 1-6. Jayaraman and Jankowski [1988] tested the airborne capture of both conventional and high-pressure sprays at a full-scale model continuous miner face. A conventional spray system on the miner (100 psi, 19 gpm) gave 30% respirable dust reduc-tion. A high-pressure system (2,500 psi, 3 gpm) gave the same reduction, but with much less water. The two systems operating together (22 gpm) gave 59% dust reduction. The dual system would be the choice for underground use, providing both airborne capture and sufficient wetting of the broken material.

A marked disadvantage of high-pressure sprays is that they entrain large volumes of air, often leading to more dispersal of dust than is captured. Because of this secondary dispersal, their application is limited to enclosed or semienclosed spaces, such as under the boom of a continuous mining machine.

Aside from efforts to improve sprays, the most helpful action you can take is to provide an automatic feature that turns sprays on and off as needed. This allows sufficient wetting while helping to avoid the problems associated with overuse of water.

Foam. For dust control, foam works better than water. It provides dust reductions of 20% to 60% compared to water. Foam also can produce similar results at lower water use, that is, the amount of water needed to make the foam is less than the equivalent water spray.

Seibel [1976] compared high-expansion foam to water sprays at a belt transfer point. Compared to water, the foam averaged an additional 30% dust reduction. Mukherjee and Singh [1984] found that foam released from a longwall shearer drum cut the dust an additional 50% compared to conventional water sprays on the drum. Also, the system used one-half the water of the conventional sprays. The drawback of the foam was high cost. Like water, foam works best

when it is mechanically mixed with the broken material. A comprehensive review of foam for dust control in mining and minerals processing has been given by Page and Volkwein [1986].

Wetting agents. Wetting agents receive a disproportionate amount of attention, perhaps because they seem to offer an easy fix to dust problems. Most interest has been in coal mining because of the hydrophobic nature of coal. The effectiveness of wetting agents has been the subject of considerable research over the years, without much of a definitive answer on how well they work. Various studies have shown a respirable dust control effectiveness compared to plain water, averaging about 25% and ranging from zero [MRDE 1981; Chander et al. 1991] to 25%-30% [Kost et al. 1980] to more than 40% [Meets and Neethling 1987]. It seems that wetting agent effectiveness depends on the type of wetting agent, type of coal, dust particle size, dust concentration, water pH, and water mineralogy [Hu et al. 1992; Kim and Tien 1994; Tien and Kim 1997]. However, no general formula or methodology has emerged that would allow a mine operator to select a wetting agent appropriate for its specific coal (or rock) type. The only alternative is to try out a prospective wetting agent and discontinue its use if there is no clear benefit. However, given that the average effectiveness of a wetting agent is 25%, about the same as the accuracy of dust sampling methods, a wetting agent choice is never easy.

DUST COLLECTORS

Dust collectors can play a valuable role in dust reduction—if space is available to locate the collector and if the collector efficiency is high. Dust collectors range from low-volume filtration systems used in the cabs of mining equipment [Organiscak et al. 2000] to high-volume wet collectors used on continuous miners in coal mines [Volkwein et al. 1985].

The most difficult dust collector application occurs when the dust has a high percentage of silica and the air passing through the collector is reused. Then, any minor collector malfunction or design flaw will lead to excessive dust levels.

It is important to recognize that the efficiency of a dust collector is the filtration efficiency of the unit times the capture efficiency of its inlet. For collectors properly designed to trap respirable dust, the filtration efficiency is usually quite high, in the 90%-95% range. The inlet capture efficiency is much more variable. The inlet capture efficiency is high, 80% or better, when the collector extracts air from an enclosed or semienclosed space, such as the cutter head space of a hard-rock TBM or the crusher on a longwall stageloader. If the coalbed is not too high, capture efficiency is also reasonable at continuous miner faces, which are dead-end spaces crammed with equipment. However, where there is less enclosure, such as in continuous miner faces in high coal, roadheader faces, or longwall shearer faces, inlet capture efficiency is poor, 50% or less, unless the collector air quantity is unreasonably high.

Collectors also exhibit many design and maintenance problems, as follows:

Design problems. The designers of dust collection systems take many shortcuts to cut costs and reduce the amount of maintenance required, some of which also reduce the efficiency. For example, some of the fiber filters on cab filtration systems [Organiscak et al. 2000] and the flooded-bed panels on continuous miners [Colinet and Jankowski 2000] have been found to be too porous. A porous filter permits more airflow and allows for a smaller fan, but exhibits a poor collection efficiency for hard-to-trap respirable dust. Also, in recent years, continuous miner booms have been redesigned to move the collector inlets from the boom to the hinge point. This has had many benefits in cost and maintenance, but this location is farther from the dust source and thus has lowered the inlet capture efficiency [Jayaraman et al. 1992b].

Maintenance problems. Dust collectors in mines and tunnels can be high-maintenance equipment. Screens and filters clog often, sometimes more than once per shift. Gaskets disappear and access doors leak. Often, filters are not seated properly, and dusty air leaks around them. Filters also develop holes from mishandling and from abrasion by larger-sized particulate. Ductwork leading to the collector fills with coarse particulate, cutting off the airflow. Fans located on the inlet side of the collector suffer rapid erosion of their blades and are usually not designed for convenient blade replacement. High dust levels are the result. A major reason for excessive silica exposure during coal mine roof bolting is lack of maintenance on the bolting machine dust collector.

REDUCING THE AMOUNT OF DUST GENERATED

When less dust is generated, less has to be removed from the mine air.

Dust is generated by extraction, drilling, blasting, dropping, crushing, and conveying. Usually, there is some opportunity for improved control.

Extraction. The machines that produce extraction dust are longwall shearers, continuous miners, tunnel boring machines, and roadheaders. For these, the deeper the cut and the larger the chips, the less the dust produced per pound of material removed [Ludlow and Wilson 1982]. Of the factors that impact cut depth, the one under the control of the mine operator is the sharpness and the lacing pattern of the cutting tools. Lab studies on conical cutting bits have shown that significantly worn bits without their carbide tips produce much more dust [Organiscak et al. 1995].

Aside from using sharper cutting bits, water can be applied as described above. Another application of water that reduces cutting dust is water infusion of coal seams. Although it has been largely abandoned because of high cost, water infusion of coal seams will reduce dust by about 50%. To infuse a coal seam, boreholes are drilled into the coal seam ahead of mining and large volumes of water are pumped in under high pressure to wet the coal [McClelland et al. 1987].

Somewhat analogous to cutting is the grinding action of longwall shields as they are pressed against the coal mine roof. This dust is released into the air as the shields are lowered and moved forward. The factors affecting dust generated by longwall shields and the methods used to control this dust have been discussed by Organiscak et al. [1985].

Drilling. In coal mines, the most common method of drill dust control is a dry collector with the intake at the tip of the drill bit. This arrangement provides excellent dust control if the collector is maintained properly [Divers and Jankowski 1987].

In hard-rock mines and tunnels, water injection through the drill steel has been effectively used to control dust for many years [ILO 1965; Page 1982]. Foam injection through the drill steel also can be used in those applications where excessive water can create a problem [Page 1982]. Problems with wet drills usually result from maintenance difficulties such as failure to clean out clogged lines or refill water tanks. Dry dust collectors with the inlet located at the collar of the drill hole have also worked [Page and Folk 1984], but not as well as water or foam.

Blasting. Blasting is done at a time when workers are not expected to enter the affected area of the mine for the next hour or so [Knight 1980]. This allows some dust to settle out and the rest

to be carried away by the ventilation system. Water can help control dust by wetting down the blast area.

Dropping. In removing and transporting mined material, the broken material is inevitably dropped. At longwall faces, the broken coal can fall 6 ft or more to the panline. At tunnel-boring machines, rock removed at the crown can drop 25 ft or more. At conveyor belts, the dropping of material from one belt to another can be a major dust source. Where it is possible to do so, dust from falling material, whether at ore passes or at conveyor transfer points, is usually controlled by enclosure and exhaust ventilation [Marshall 1964].

Crushing. Crushers in mines range from small roll types used in coal mines to large gyratory types used in hard-rock mines and mills. Whatever the size and method of crushing, dust is controlled by water sprays and local exhaust ventilation. The amount of water and air needed to do the job is hard to specify. It depends on the type of material being crushed and the degree to which the crusher can be enclosed. Jayaraman et al. [1992a] obtained substantial reductions in crusher dust at a longwall by enclosing the entire stageloader-crusher unit, using 18 gpm of water inside the enclosure, and extracting 2,500 cfm of air from the enclosure. Rodgers et al. [1978] described how dust from a 5-ft gyratory crusher was reduced by using a 75,000-cfm exhaust ventilation system and a control booth for the operators.

Conveying. Conveying by railcar usually generates little dust. Rubber-tired vehicles will kick up dust if the mine floor is dry. This dust from the floor can be reduced by wetting, by calcium chloride, or by any of the chemical preparations used to control dust at surface mines [ILO 1965; Kissell 1992].

A conveyor belt can generate large amounts of dust from several sources. Dust originates at transfer points. It is also shaken from the belt as the belt passes over the idlers. Spillage of material from the belt can also be a big contributor. Further, a high velocity of ventilation air will assist the release of dust by drying the material and releasing settled particulate.

Methods to deal with belt dust are well known [Goldbeck and Marti 1996; Swinderman et al. 1997]. If belt dust is high, the relevant questions to address are the following:

1. Are transfer points enclosed? A simple enclosure with a spray or two inside of it may be adequate. If this is not enough, the air inside must be exhausted to a dust collector, with all of the leakage points on the enclosure sealed properly [Swinderman et al. 1997].

2. Is the material being conveyed adequately wet, but not so much that it leaves a sticky mud residue on the belt? When this residue dries, dust is released; thus, an end result of excessive wetting can be an increase in belt dust.

3. Are the undersides of both the top and the bottom belts being wet [Ford 1973] so that dust sticking to the belt is not shaken loose by the idlers? Does the belt stay wet or is it drying out and releasing dust?

4. Are the belt scrapers working properly? Is a second set of scrapers being used? Has a belt-washing system been tried [Bennett and Roberts 1988; Stahura 1987]?

5. Is the belt running true and not spilling its contents [Swinderman et al. 1997]?

Chapter 6 on hard-rock mines contains more information on conveyor belt dust control. See page 86.

SUMMARY

DUST CONTROL METHOD	EFFECTIVENESS (Low is 10%-30%, moderate is 30%-50%, high is 50%-75%)	*COST AND DRAWBACKS*
Dilution ventilation	Moderate	High – more air may not be feasible
Displacement ventilation, including enclosure with extraction of dusty air	Moderate to high	Moderate – can be difficult to implement well
Wetting by sprays	Moderate	Low – too much water can be a problem
Airborne capture by sprays	Low	Low – too much water can be a problem
Airborne capture by high pressure sprays	Moderate	Moderate – can only be used in enclosed spaces
Foam	Moderate	High
Wetting agents	Zero to low	Moderate
Dust collectors	Moderate to high	Moderate to high – possible noise problems
Reducing generated dust	Low to moderate	Moderate
Enclosure with sprays	Low to moderate	Moderate
Dust avoidance	Moderate	Low to moderate

Many methods have been tested to control dust in tunnels and underground mines. Poor results and difficult operating conditions have ruled out a high proportion. Those that have remained will reliably reduce dust if one makes a determined effort to deal with the problem. Inevitably, there is cost and inconvenience involved. However, the proper consideration and use of ventilation, water, and dust collectors can usually achieve a satisfactory result.

REFERENCES[4]

Bazzanella A, Becker H, Kemper F [1986]. Staubbekampfung in abbaubetrieben mit schneidender kohlengewinning. Gluckauf *122*(11):728-735. Also available in translation as: Dust suppression in shearer faces, Gluckauf Translation *122*(11):204-207.

[4]References that contain general information on dust control are: Hartman et al. [1997], Kissell [1992, 1996], Knight [1980], McPherson [1993], Swinderman et al. [1997], Tien [1999], and WHO [1999].

Bennett DJ, Roberts AW [1988]. Carry-back measurements to evaluate the design, selection, and performance of belt cleaning systems. Mechanical Engineering Transactions, The Institution of Engineers, Australia. Vol. ME13, No. 4, December, pp. 215-221.

Bigu J, Grenier MG [1989]. Reduction of airborne radioactive dust by means of a charged water spray. AIHA J *50*:336-345.

Brown CE, Schrenk HH [1938]. Control of dust from blasting by a spray of water mist. Pittsburgh, PA: U.S. Department of the Interior, RI 3388.

Chander S, Alaboyun AR, Aplan FF [1991]. On the mechanism of capture of coal dust particles by sprays. In: Proceedings of the Third Symposium on Respirable Dust in the Mineral Industries (Pittsburgh, PA, October 17-19, 1990). Littleton, CO: Society for Mining, Metallurgy, and Exploration, Inc.

Cheng L, Zukovich PP [1973]. Respirable dust adhering to run-of-face bituminous coals. Pittsburgh, PA: U.S. Department of the Interior, Bureau of Mines, RI 7765. NTIS No. PB 221-883.

Colinet JF, Jankowski RA [2000]. Silica collection concerns when using flooded-bed scrubbers. Min Eng *Apr*:49-54.

Colinet JF, Spencer ER, Jankowski RA [1997]. Status of dust control technology on U.S. long-walls. In: Ramani RV, ed. Proceedings of the Sixth International Mine Ventilation Congress. Littleton, CO: Society for Mining, Metallurgy, and Exploration, Inc., pp. 345-351.

Courtney WG, Cheng L [1977]. Control of respirable dust by improved water sprays. In: Respirable Dust Control – Proceedings of Technology Transfer Seminars, Pittsburgh, PA, and St. Louis, MO, IC 8753, pp. 92-108. NTIS No. PB 272 910.

Divers EF, Jankowski RA [1987]. Maintaining filters, bits can control respirable quartz dust during roof drilling. Coal Age *Feb*:57-59.

Divers EF, Jayaraman NI, Custer J [1982]. Evaluation of a combined face ventilation system used with a remotely operated mining machine. Pittsburgh, PA: U.S. Department of the Interior, Bureau of Mines, IC 8899. NTIS No. PB83-156794.

Ford VHW [1973]. Bottom belt sprays as a method of dust control on conveyors. Min Technol (U.K.) *55*(635):387-391.

Goldbeck LJ, Marti AD [1996]. Dust control at conveyor transfer points: containment, suppression, and collection. Bulk Solids Handling *16*(3):367-372.

Hamilton RJ, Knight G [1957]. Laboratory experiments on dust suppression with broken coal. London, U.K.: National Coal Board, Mining Research Establishment Report No. 2083.

Hartman HL, Mutmansky JM, Ramani RV, Wang YJ [1997]. Mine ventilation and air conditioning. Third Edition. New York: John Wiley & Sons, Inc.

Hu Q, Polat H, Chander S [1992]. Effect of surfactants in dust control by water sprays. In: Proceedings of the Symposium on Emerging Process Technologies for a Cleaner Environment. Littleton, CO: Society for Mining, Metallurgy, and Exploration, Inc., pp. 269-276.

ILO [1965]. Guide to the prevention and suppression of dust in mining, tunnelling, and quarrying. Geneva, Switzerland: International Labour Organization.

Jankowski RA, Organiscak JA [1983]. Dust sources and controls on the six U.S. longwall faces having the most difficulty complying with dust standards. Pittsburgh, PA: U.S. Department of the Interior, IC 8957. NTIS No. PB84-142058.

Jayaraman NI, Jankowski RA [1988]. Atomization of water sprays for quartz dust control. Appl Ind Hyg *3*:327-331.

Jayaraman NI, Divers EF, Derick RL, Babbitt C [1986]. Evaluation of a new half-curtain technique for continuous miner faces. In: Proceedings of the Symposium on Respirable Dust. University Park, PA: The Pennsylvania State University.

Jayaraman NI, Jankowski RA, Organiscak JA [1992a]. An update on stageloader dust control. In: Proceedings of Longwall USA (Pittsburgh, PA).

Jayaraman NI, Jankowski RA, Whitehead KL [1992b]. Optimizing continuous miner scrubbers for dust control in high coal seams. In: Proceedings of New Technology in Mine Health and Safety Symposium. Littleton, CO: Society for Mining, Metallurgy, and Exploration, Inc., pp. 193-205.

Kim J, Tien JC [1994]. Effect of added base on coal wetting ability of nonionic surfactant solutions used for dust control. Min Eng (London) *154*(399):151-155.

Kissell FN [1992]. Gas and dust control. In: SME Mining Engineering Handbook. Littleton, CO: Society for Mining, Metallurgy, and Exploration, Inc., pp. 1004-1020.

Kissell FN [1996]. How to control air contaminants during tunnel construction. Pittsburgh, PA: U.S. Department of the Interior, Bureau of Mines, IC 9439. NTIS No. PB96-147558.

Knight G [1980]. Generation and control of mine airborne dust. Canada Centre for Mineral and Energy Technology (CANMET) Report 80-27E.

Kost JA, Shirey GA, Ford CT [1980]. In-mine tests for wetting agent effectiveness. Bituminous Coal Research, Inc. U.S. Bureau of Mines contract No. J0295041. NTIS No. PB82-183344/XAB.

Ludlow J, Wilson RJ [1982]. Deep cutting = key to dust free longwalling. Coal Mining and Processing *19*(8):40-43.

Marshall L [1964]. Dust control at ore and waste pass dumps. Canad Min J *Oct*:84-86.

Matta JE [1976]. Effect of location and type of water sprays for respirable dust suppression on a continuous mining machine. Pittsburgh, PA: U.S. Department of the Interior, Bureau of Mines, TPR 96. NTIS No. PB-254-677.

McClelland JJ, Organiscak JA, Jankowski RA, Pothini BR [1987]. Water infusion for coal mine dust control: three case studies. Pittsburgh, PA: U.S. Department of the Interior, Bureau of Mines, RI 9096. NTIS No. PB88-120514.

McCoy J, Melcher J, Valentine J, Monaghan D, Muldoon T, Kelly J [1983]. Evaluation of charged water sprays for dust control. Waltham, MA: Foster-Miller, Inc. U.S. Bureau of Mines contract No. H0212012. NTIS No. PB83-210476.

McCoy JF, Schroeder WE, Rajan SR, Ruggieri SK, Kissell FN [1985]. New laboratory measurement method for water spray dust control effectiveness. AIHA J *46*(12):735-740.

McPherson MJ [1993]. Subsurface ventilation and environmental engineering. Kluwer Academic Publishers.

Meets EJ, Neethling AF [1987]. Some experiences in the use of wetting agents to suppress dust at Sigma colliery. J Mine Vent Soc S Afr *Oct*:126-133.

MRDE [1981]. Methods of reducing dust formation and improving dust suppression on longwall faces: final report on ECSC research project 7256-12/003/08. Mining Research and Development Establishment (U.K.).

Mukherjee SK, Singh MM [1984]. New techniques for spraying dust. Coal Age *June*:54-56.

Myran T [1985]. Tunnel boring machines in Norway: ventilation and dust problems. In: Proceedings of the Second U.S. Mine Ventilation Symposium (Reno, NV).

Organiscak JA, Cecala AB, Heitbrink WA, Thimons ED, Schmitz M, Ahrenholtz E [2000]. Field assessment of retrofitting surface coal mine equipment cabs with air filtration systems. In: Bockosh GR, Karmis M, Langton J, McCarter MK, Rowe B, eds. Proceedings of the 31st Annual Institute of Mining Health, Safety and Research. Blacksburg, VA: Virginia Polytechnic Institute and State University, Department of Mining and Minerals Engineering, pp. 57-68.

Organiscak JA, Khair AW, Ahmad M [1995]. Studies of bit wear and respirable dust generation. Transactions SME, Vol. 298. Littleton, CO: Society for Mining, Metallurgy, and Exploration, Inc., pp. 1874-1879.

Organiscak JA, Listak JM, Jankowski RA [1985]. Factors affecting respirable dust generation from longwall roof supports. Pittsburgh, PA: U.S. Department of the Interior, Bureau of Mines, IC 9019. NTIS No. PB85 236453.

Page SJ [1982]. An evaluation of three wet dust control techniques for face drills. Pittsburgh, PA: U.S. Department of the Interior, Bureau of Mines, RI 8596. NTIS No. PB82-177320.

Page SJ, Folk M [1984]. Keystone achieves positive dust control during dry drilling. Eng Min J *185*(9):84-85.

Page SJ, Volkwein JC [1986]. Foams for dust control. Eng Min J *187*(10):50-52, 54.

Rodgers SJ, Rankin RL, Marshall MD [1978]. Improved dust control at chutes, dumps, transfer points, and crushers in noncoal mining operations. MSA Research Corp. U.S. Bureau of Mines contract No. H0230027. NTIS No. PB297-422.

Ruggieri SK, Jankowski RA [1983]. Fundamental approaches to longwall dust control. In: Proceedings of the Symposium on Control of Respirable Dust (Beckley, WV, Oct. 4-8, 1983).

Seibel RJ [1976]. Dust control at a transfer point using foam and water sprays. Pittsburgh, PA: U.S. Department of the Interior, Bureau of Mines, TPR 97. NTIS No. PB-255-440.

Shirey CA, Colinet JF, Kost JA [1985]. Dust control handbook for longwall mining operations. BCR National Laboratory. U.S. Bureau of Mines contract No. J0348000. NTIS No. PB86-178159/AS.

Stahura RP [1987]. Conveyor belt washing: is this the ultimate solution? TIZ-Fachberichte *111*(11):768-771. ISSN 0170-0146.

Swinderman RT, Goldbeck LJ, Stahura RP, Marti A [1997]. Foundations 2: the pyramid approach to dust control and spillage from belt conveyors. Neponset, IL: Martin Engineering.

Tien JC [1999]. Practical mine ventilation engineering. Chicago, IL: Intertec Publications.

Tien JC, Kim J [1997]. Respirable dust control using surfactants. Appl Occ Env Hyg *12*(12): 957-963.

Tomb TF, Emmerling JE, Kellner RH [1972]. Collection of airborne coal dust by water spray in a horizontal duct. AIHA J *33*(11):715-721.

U.S. Bureau of Mines [1981]. Technology news 118: Lower dust exposure of longwall shearer operator by relocating the machine cooling water sprays. Pittsburgh, PA: U.S. Department of the Interior, Bureau of Mines.

U.S. Bureau of Mines [1984]. Technology news 203: How to reduce shearer operators dust exposure by using remote control. Pittsburgh, PA: U.S. Department of the Interior, Bureau of Mines.

U.S. Bureau of Mines [1985]. Technology news 220: How twelve continuous miner sections keep dust levels at 0.5 mg/m^3 or less. Pittsburgh, PA: U.S. Department of the Interior, Bureau of Mines.

van der Bank PJ [1977]. Fog nozzle water blast. J Mine Vent Soc S Afr *Apr*:81-82.

Volkwein JC, Cecala AB, Thimons ED [1983]. Use of foam for dust control in minerals processing. Pittsburgh, PA: U.S. Department of the Interior, Bureau of Mines, RI 8808. NTIS No. PB84-131184.

Volkwein JC, Thimons ED, Halfinger G [1985]. Extended advance of continuous miner successfully ventilated with a scrubber in a blowing section. In: Proceedings of the Second U.S. Mine Ventilation Symposium (Reno, NV).

WHO [1999]. Hazard prevention and control in the work environment: airborne dust. Geneva, Switzerland: World Health Organization.

Zimmer RA, Lueck SR, Page SJ [1987]. Optimization of overburden drill dust control systems on surface coal mines. Int J Surf Min *1*:155-157.

CHAPTER 2.—CONTINUOUS MINER AND ROOF BOLTER DUST CONTROL

By Fred N. Kissell, Ph.D.,[5] and Gerrit V. R. Goodman, Ph.D.[6]

In This Chapter

- ✓ Design and operation of machine-mounted scrubbers
- ✓ Dust control with scrubbers and blowing ventilation
- ✓ Dust control with scrubbers and exhaust ventilation
- ✓ Dust control with exhaust ventilation and no scrubber
- ✓ Dust control methods common to all continuous miner sections
- ✓ Dust control for roof bolters

This chapter explains how to control dust at continuous miner sections in coal mines where the main dust sources are continuous miners and roof bolters. In relation to dust, there are three categories of continuous miner faces depending on the type of ventilation and whether or not a machine-mounted dust scrubber is used. These are—

1. Mining machines with dust scrubbers used with blowing face ventilation
2. Mining machines with dust scrubbers used with exhaust face ventilation
3. Mining machines without scrubbers used with exhaust face ventilation

The approach to dust control is somewhat different in all three of these. However, there are many dust control features (such as the need to provide adequate airflow) common to all continuous miner sections.

For workers at roof bolter faces, there are two dust sources:

1. Dust from the continuous miner when it is upwind.
2. A malfunctioning dust collector on the bolter, which allows dust to escape

DESIGN AND OPERATION OF MACHINE-MOUNTED SCRUBBERS

Almost all new continuous miners are equipped with scrubbers. When the dust is excessive, it is possible that the scrubber needs some maintenance.

---

[5]Research physical scientist.
[6]Mining engineer.
Pittsburgh Research Laboratory, National Institute for Occupational Safety and Health, Pittsburgh, PA.

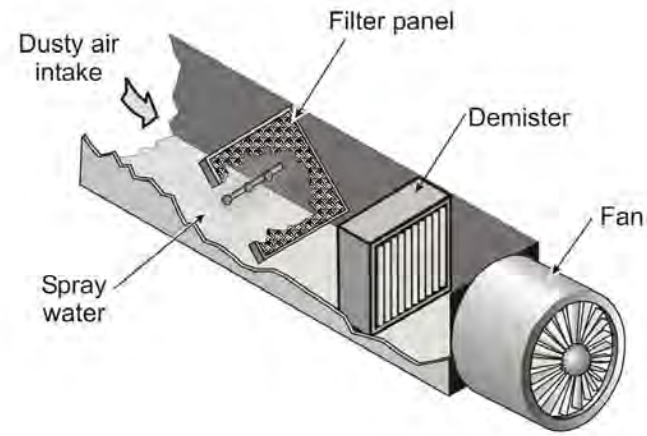

Figure 2-1.—Machine-mounted scrubber design.

Machine-mounted scrubbers, which are installed on continuous miners, collect dust-laden air through one or more inlets near the front of the miner and discharge cleaned air at the back of the miner. Figure 2-1 shows a typical design.

Inside the scrubber, the dust-laden air passes through a knit wire-mesh filter panel that is wetted with water sprays, which causes the dust particles to be captured by the water. After passing through the filter panel, the airstream then enters a demister, which removes the dust-laden water droplets from the airstream. The cleaned air passes through the fan and is then discharged at the back of the scrubber unit. Some scrubber designs have ductwork on the rear of the miner, which permits the discharge of air on either side of the machine.

Overall scrubber efficiency. The overall efficiency of the scrubber is determined by the fraction of face air that is drawn into the scrubber inlet (inlet capture efficiency) multiplied by the fraction of respirable dust removed from the captured air (filter efficiency). Overall efficiency ranges from 60% to 75% in most instances. However, several factors can cause the efficiency to decline. The most common is clogging of the filter panel.

Inlet capture efficiency. In practice, the inlet capture efficiency can be reduced by both working factors and machine design factors. The main working factors causing loss in inlet capture efficiency are entries that are large, spray pressures that are too high, and the use of blowing ventilation systems. Ideally, a dust scrubber should function like an exhaust ventilation system, drawing clean air forward over the miner and confining the dust cloud to that part of the miner that is forward of the inlet. When the entry is large, however, the scrubber capacity may not be adequate to maintain sufficient forward airflow over the miner.[7] The result is a rollback of dust, as depicted in figure 1-1. Excessive spray pressure or poorly aligned sprays also can cause rollback because of the turbulence and air movement they create. When air is delivered via blowing ventilation, and particularly with blowing duct, the amount of air delivered[8] to the face can exceed that removed by the scrubber. When this happens, dust-laden air is no longer confined to the front of the miner, but rolls back over the miner, contaminating the return air and the air breathed by workers. Specifics on how to deal with rollback are given later in this chapter.
The machine design factors that impact inlet capture efficiency are the scrubber air quantity and the location of the inlets. The air quantity should always be as large as possible and the inlets as

[7]When the entry size increases, the open area increases by a greater proportion because some of the entry is blocked by the miner.
[8]The amount of air delivered to the face includes both the airflow (the air jet) from the duct and that portion of the surrounding air induced into the jet.

far forward and close to the cutting drum as practical [Jayaraman et al. 1992]. On high-coal machines, the inlets are usually distributed under the cutting boom, which is a good location because it is where the dust cloud is thickest. On low-coal machines, the inlet is usually at the boom hinge point, which is not as good because it is farther from the cutting drum. However, since low-coal machines usually work in entries where the clearance over the machine is less, the rollback of dust that might result from using a hinge point inlet may be offset by higher forward air velocities through a narrower space over the miner. Mines in high coal that use a hinge point inlet never reach adequate capture efficiencies, even with very high scrubber airflows [Hole and Von Glen 1998].[9]

One frequently asked question is what the airflow ratio should be, that is, the ratio of ventilation airflow to scrubber airflow. The most recent research [Fields et al. 1990] shows that this ratio is not particularly important for dust control, assuming there is enough ventilation airflow to dilute dust (and gas) and assuming that blowing systems are not used in a way[10] that overpowers the scrubber and causes a loss in inlet capture efficiency.

Filter efficiency. The thickness of the filter panel controls the filter efficiency. The original filter panel was made with 40 layers of stainless steel mesh knit from 85-micrometer stainless steel wire. Today, thinner filter panels containing 30, 20, and 10 layers of stainless steel mesh are available. The reduced filter thickness allows larger quantities of air to be moved by the scrubber, potentially improving inlet capture efficiency. However, thinner filters are less efficient at trapping dust. In a study by Colinet and Jankowski [2000], the 30-layer panel displayed a filter efficiency above 90% for respirable-sized dust, but the filter efficiency dropped too much when the thinner 20- and 10-layer panels were tested.

Scrubber maintenance. When the dust is excessive, it is likely that the scrubber needs maintenance. More than likely, some cleaning of the filter panel or ductwork is required.[11] The sprays should be checked to ensure they are completely wetting the entire filter panel, and not just the center. The density of the panel should also be checked to ensure that a panel of 30 layers was purchased.

Schultz and Fields [1999] reported a method used by one mine operator to block large pieces of coal from entering the scrubber inlets under the boom. The mine had installed a flap of conveyor belt about 8 inches inby each inlet and the flaps extended downward about 8 inches. The flaps forced the air to make an extra turn before entering the inlet, blocking the larger particles flying from the cutting drum. These flaps worked so well that the scrubber lost only 10% of its airflow capacity after an entire shift of operation.

[9]Hole and Von Glen [1998] tested a scrubber for which the distance between the inlet and outlet was only about 8.2 ft. Air entrainment into the outlet jet produced a low-pressure region on the side of the machine that caused air at the front of the machine to bypass the inlet, further reducing the inlet capture efficiency.
[10]This is described in more detail in the next section.
[11]Schultz and Fields [1999] have noted that some scrubbers lose as much as one-third of their airflow after just one cut. Scrubber airflow can be monitored by measuring the filter differential pressure, the fan inlet pressure, or the fan motor current [Taylor et al. 1996].

DUST CONTROL WITH SCRUBBERS AND BLOWING VENTILATION

Dust scrubbers are most often used with blowing ventilation. When operator dust levels are too high, the most likely reason is that the operator is not spending enough time standing in front of the blowing line curtain.

With blowing face ventilation, fresh air is directed behind the line curtain or through ventilation duct and then discharged from the end of the line curtain/duct toward the face. This fresh air dilutes and entrains dust at the mining face, and the dust-laden air then passes out of the immediate face area and into the dust scrubber. After the dust is removed from the air, the air is discharged backwards from the rear of the mining machine on the side of the machine opposite the line curtain. A typical scrubber-blowing ventilation arrangement is shown in figure 2-2.

Remote placement of the mining machine operator. Although sections using blowing face ventilation use machine-mounted scrubbers, the operator can still be exposed to some of the respirable dust escaping the scrubber. This includes dust that escaped being drawn into the intake, as well as dust drawn into the intake but not collected by the filter panel. As a result, it can make a difference where the remote operator is located while operating the miner. A study by Jayaraman et al. [1987] in an Illinois mine measured the dust reduction benefits from positioning the operator in intake rather than return air, as shown in figure 2-2. The average intake level was 0.2 mg/m^3 and the average return level was 3.1 mg/m.^{3} This shows that a 94% reduction in operator exposure could be obtained by moving the operator to a

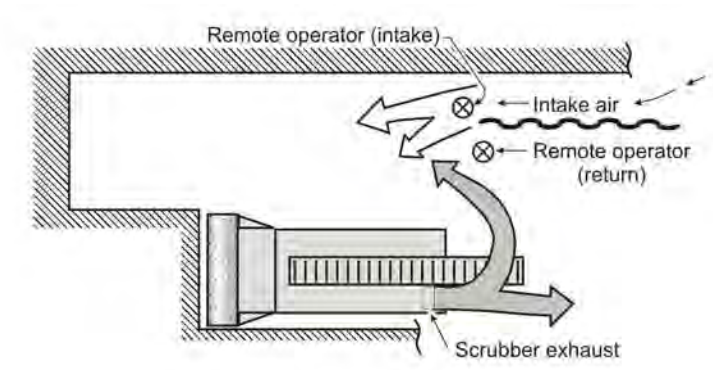

Figure 2-2.—Dust scrubber used with blowing ventilation.

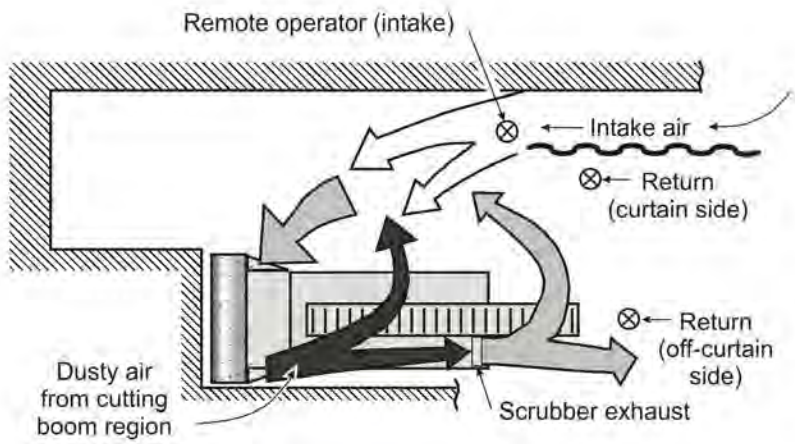

Figure 2-3.—Excessive air blown toward the face will cause dust to bypass the scrubber inlets.

position in front of the line curtain.[12] More recently, Goodman and Listak [1999] measured 0.79 mg/m^3 on a remote operator who spent most (but not all) of the time in front of the line curtain. The actual dust concentration of the intake air was 0.13 mg/m^3. Still, the dust reduction was 73% when compared to the return dust level of 2.9 mg/m^3.

Factors causing high dust levels. When remote operator dust levels are too high, the most likely reason is that the operator is not spending enough time standing in front of the blowing line curtain.[13] When downwind dust levels are too high,[14] it is likely that the scrubber needs maintenance. More than likely, some cleaning of the ductwork or filter panel is required. If the scrubber is operating properly, then the ventilation and the sprays should be checked. If the amount of air directed into the cutter boom region exceeds the amount of air withdrawn by the scrubber, then much of the dust cloud around the cutter boom will bypass the scrubber and move outby to contaminate the return (figure 2-3). This is the rollback of dust described earlier in this chapter. This excess air may be reduced by winging out the line curtain at the end to lower the velocity of the air emerging from behind it [Schultz and Fields 1999] or to pull the line curtain back slightly. Jayaraman et al. [1988] described successful experiments in a mine where the operator erected a short line curtain during the slab cut to shield the miner from the air jet emerging from a blowing duct.[15] However, the ability to use these techniques will depend on the amount of methane gas present, since limiting the fresh air may increase methane levels.

---

[12]Gas emissions, MSHA guidelines regarding line curtain setback, and roof control plans may limit the selection of the best location from a dust exposure standpoint.

[13]Some mines position the operator on the return side of the line curtain but very close to the line curtain. If the line curtain has a high leakage rate, this leakage air can reduce the operator's dust level. Occasionally, a mine will slit the line curtain and position the operator in the clean air emerging from the slit. How well this works is not known.

[14]The miner helper, the shuttle car operator, or other positions downwind.

[15]Dust problems caused by blowing too much air at the face are more prevalent when ventilation duct is used in place of blowing line curtain. This is because the jet of air from the duct is moving at a much higher velocity. Due to the higher velocity, the reach of the jet is extended and the amount of surrounding air entrained by the jet and pushed forward is much greater. The problem is common in Germany, where coal mine face ventilation systems use a blowing duct in combination with an exhaust system. The usual approach to reduce dust is to use a diffuser at the end of the blowing duct [Noack et al. 1989; Graumann and Gastberg 1984].

The dust cloud also can bypass the scrubber when the spray pressure is too high[16] or when directional sprays, such as in the "spray fan" system, are used. The resulting turbulence and air movement also will cause much of the dust cloud to bypass the scrubber inlet and move outby toward the operator.

DUST CONTROL WITH SCRUBBERS AND EXHAUST VENTILATION

As with blowing ventilation, the position of the operator is crucial for good dust control.

When exhaust ventilation is used with a scrubber, fresh air is drawn through the mine entry toward the face. This air then passes into the scrubber where it is cleaned of dust and discharged back toward the line curtain. From the line curtain, the air passes to the return. Figure 2-4 shows a typical scrubber-exhaust ventilation arrangement with the miner operated by remote control. As with blowing ventilation, the location where the mining machine operator stands greatly changes his or her dust level. However, dust levels in exhaust ventilation sections can be lower than those in blowing ventilation sections because the mining machine operator has more options as to where to stand and stay out of the dust cloud. Also, the shuttle car operator is working in fresh air.

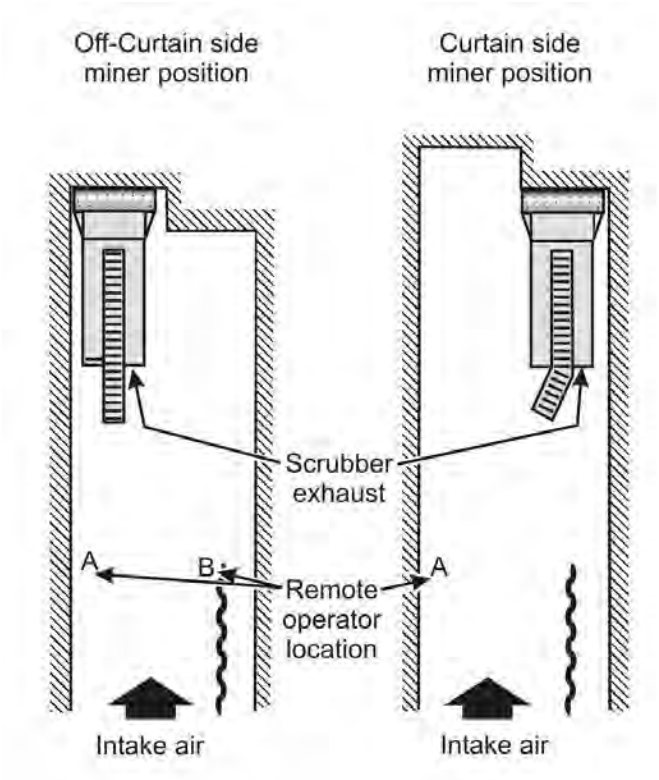

Figure 2-4.—Dust scrubber used with exhaust ventilation.

In a mine using a machine-mounted scrubber and exhaust ventilation, Goodman and Listak [1999] measured dust levels at the mining machine and at the remote operator location. The entry size was 10 ft by 20 ft. The scrubber flow was 9,500 cfm, and the air quantity exhausted by the line curtain was 15,000 cfm. For the box cut (figure 2-4, left), the remote operator stood at locations A or B; for the slab cut (figure 2-4, right), at location A only. Both locations were parallel with the end of the line curtain. The dust level at the

[16]Remedies include lowering the spray pressure to under 100 psi. The spray pressure is measured by removing a nozzle and attaching a hose that leads to a pressure gauge. See the section in this chapter on the antirollback spray system.

right rear corner of the miner (the cab location on nonremote machines) was 4.3 mg/m^3; the dust level for the remote operator location was 0.79 mg/m^3, about 80% lower than the cab location.

Goodman and Listak also found that when the remote operator positioned himself at location A, he could move a few feet inby toward the face without his dust level increasing much. However, when he stood at location B and moved a few feet inby, his dust level rose significantly because he had moved out of the intake air zone.

In another study of scrubbers and exhaust ventilation, Colinet and Jankowski [1996] used a full-scale lab model to assess the dust impact of moving the location of the remote operator while changing the distance from the end of the line curtain to the face, the line curtain airflow, and the water pressure. The entry size was 9 ft by 18 ft, and the scrubber flow was 7,800 cfm. Tests were done with the airflow ranging from 3,000 to 13,000 cfm, the line curtain-to-face distance from 30 to 40 ft, and the water spray pressure from 60 to 200 psi. Dust was measured at location A shown in figure 2-4, 5 ft inby location A, and 5 ft outby location A. Colinet and Jankowski found higher dust levels at the inby location and recommended that operators always position themselves either at location A, parallel to the end of the line curtain, or outby. At these recommended locations, changing the water pressure and line curtain-to-face distance had no effect on dust levels. Changing the airflow from 3,000 to 13,000 cfm produced a modest[17] 0.5 mg/m^3 decrease in dust. Colinet and Jankowski also point out that the scrubber exhaust must be on the same side of the entry as the line curtain and that this may require a crossover air duct at the rear of the miner.

When the dust level is too high, the first thing to check is whether the operator is standing parallel to or outby the end of the line curtain. Other factors to check are whether the jet from the scrubber exhaust is on the same side of the entry of the line curtain, whether the line curtain end is outby the scrubber exhaust, and whether the air in the jet is all passing behind the line curtain rather than backing up against the intake air. To test if the air in the jet is all passing directly behind the line curtain, the contents of a dry powder fire extinguisher should be released into the scrubber exhaust stream. Then, observe whether all of the powder goes behind the line curtain.

DUST CONTROL WITH EXHAUST VENTILATION AND NO SCRUBBER

Exhaust ventilation alone can be a very effective way to control dust. The quantity of ventilation air is the most important factor in controlling dust exposure.

With exhaust ventilation, fresh air is drawn up the mine entry to the face to dilute and entrain dust. Dust-laden air is then pulled from the face area and carried behind the line curtain or into ventilation duct and out of the face area.

[17]This amount is modest considering such a huge change in the airflow.

Over 15 years ago, the U.S. Bureau of Mines (USBM) surveyed 12 continuous miner sections that were at or below 0.5 mg/m^3 during the previous 18 months [USBM 1985b]. Three features were common in all or most of the sections: good ventilation, good spray systems, and a modified cutting cycle. The last two of these are discussed later in this chapter. The first, good ventilation, is discussed here.

Good ventilation. At all mines surveyed, the quantity of face ventilation air was the most important factor in controlling dust exposure.[18] The mean entry air velocity ranged from 63 to 335 ft/min and averaged 122 ft/min. In all cases, the distance from the face to the end of the line curtain/duct was 15 ft or less. Eight of the mines used exhaust duct with an auxiliary fan. At the other mines, the exhaust line curtain was very well maintained, and leakage was minimized by sealing the floor/line curtain interface. The high entry air velocity, averaging 122 ft/min, reduced dust rollback significantly. Rollback takes place when turbulence from the water sprays causes the dust cloud to spread toward the miner operator. Because of the high air velocity, dust generated by coal extraction was usually confined to the face area, and any operator exposure was usually from intake sources such as shuttle car loading and haulage.

Unfortunately, achieving a high ventilation air velocity is not always possible. Mine operators who cannot supply a high air velocity have three alternatives: a half-curtain, antirollback sprays, and remote control. The last two of these are discussed in the section on common dust control methods. The first, a half-curtain, is discussed here.

Half-curtain. Mines in high coal may have difficulty achieving adequate air velocities because the cross-sectional area of the mine entry is larger than normal. Although the quantity of air delivered may be large, inadequate air velocities will permit the dust cloud at the face to roll back over the miner operator. The half-curtain [Jayaraman et al. 1986] is a piece of brattice cloth supported by two pogo sticks. It is placed perpendicular to the rib just inby the operator's position and extends from roof to floor (figure 2-5).[19] The half-curtain reduces the cross-sectional area of the entry, thus increasing the air velocity in the region between the operator and the dust source. Results of a lab study show that the half-curtain performance depends largely on placement. The greatest improvement (86%) was achieved when the half-curtain was outby the end of the line curtain and just inby the operator. Underground tests show that with the half-curtain, the respirable dust exposure of the operator was reduced by 50%.

In gassy mines, caution must be used to ensure that hazardous accumulations of methane do not build up behind the half-curtain during the box cut. Jayaraman et al. [1986] also give procedures to follow when gas is present.

---

[18] A full-scale lab study by Colinet et al. [1991] reached the same conclusion.

[19] The half-curtain shown in figure 2-5 is on the off-curtain (duct) side of the entry. It also can be placed on the curtain (duct) side of the entry. Some mines using exhaust duct have placed a narrow curtain at the end of the duct to enlarge the capture area of the duct. This might be described as a quarter-curtain rather than a half-curtain, since the area blocked is much less. Nevertheless, it can reduce dust for the same reason, particularly if the air velocity is in the critical 40-60 ft/min range, where minor differences in air velocity can make large differences in the dust level.

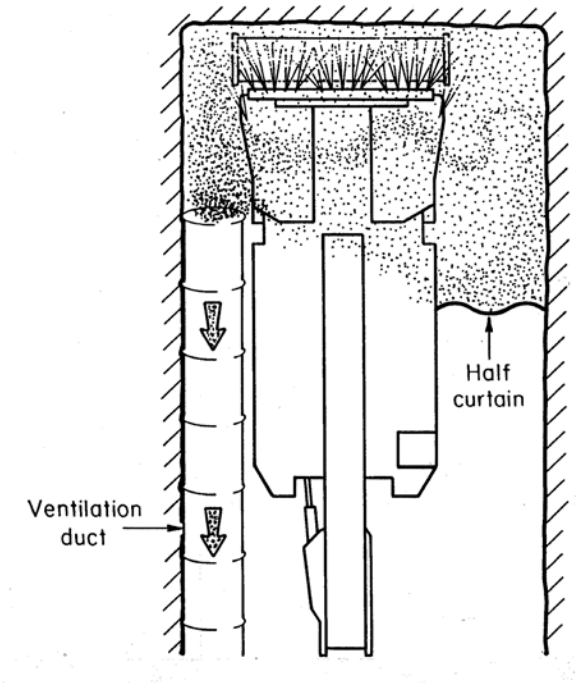

Figure 2-5.—Half-curtain location.

When dust levels are too high, the air velocity and the distance from the face to the end of the line curtain or duct should be checked. These are both critical.[20] Studies have shown that dust levels are much lower when the end of the line curtain or duct[21] is located close to the face. For this reason, the end of the exhaust line curtain or duct should be maintained within 10 ft of the face. Also, when using exhaust ventilation, mean entry air velocities above 60 ft/min have been shown to minimize dust. Both the 10-ft and 60-ft/min criteria are required by Mine Safety and Health Administration (MSHA) regulations. If these ventilation changes are not possible or if dust levels are still too high, the methods described in the next section should be considered.

DUST CONTROL METHODS COMMON TO ALL CONTINUOUS MINER SECTIONS

Many dust control methods are common to all continuous miner sections. These include good spray systems, a modified cutting cycle, remote control, good water filtration, and regular bit replacement.

The first two dust control methods in this section, good spray systems and a modified cutting cycle, originated in the USBM survey [USBM 1985b] of continuous miner sections with dust levels of 0.5 mg/m^3 or less, as discussed in the last section.

Good spray systems. All spray systems in the USBM survey were well maintained and completely functional. Water flow to the miners in the survey averaged 29 gpm. Also, sprays

[20]See figure 6-5 on page 92.
[21]When ventilation duct is used, a convenient way to keep the end close to the face is to incorporate a smaller diameter sliding section into the last fixed segment.

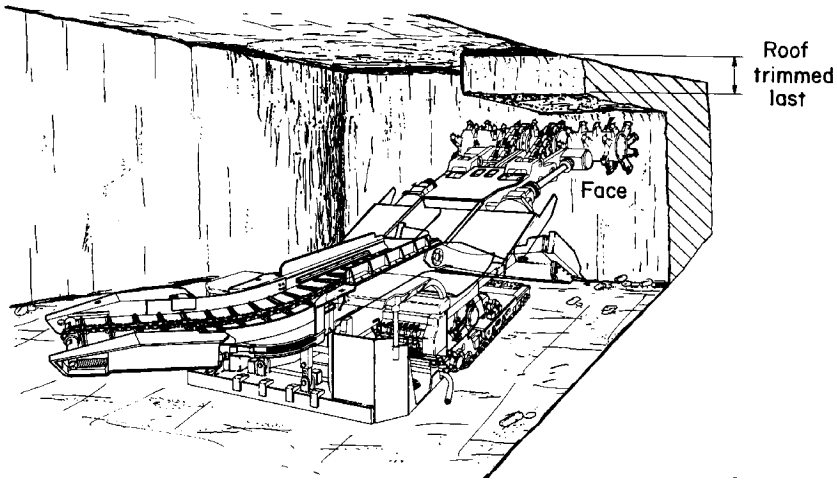

Figure 2-6.—Modified cutting cycle. In this cutting cycle, the roof is trimmed last.

were mounted on the flight

are somewhat
more effective than sprays

Modified cutting cycle. The USBM survey of low-dust continuous miner sections also found that two-thirds of the surveyed mines used a modified cutting cycle (figure 2-6). The usual cutting cycle is to sump in at the roof and then shear down to the floor. With the modified cutting cycle, the machine sumps into the coal face a foot below the roof and then shears down to the floor. This is continued for at least two sump/shear sequences. The miner then backs up and trims the remaining rock and coal from the roof.

This modified cutting cycle leaves the roof rock in place until it can be cut out to a free face, generating less dust (and particularly less quartz dust).[22] Also, some operators have found that the modified cutting cycle provides better machine control. They reported that it prevents the machine from climbing into the roof when sumping high.

Remote control. If machine operators can avoid dusty areas and remain in uncontaminated air, their dust exposure will be much lower.[23] Remote control of the miner is the way to accomplish this. With exhaust ventilation, dust is avoided by moving away from the face and back into intake air. With blowing ventilation that uses a line curtain, dust is avoided by stepping in front of the line curtain. In either case, dust reductions of 90% are possible. Remote control allows the operator to step back and get away from the dust cloud that surrounds the machine. Several studies have shown how effective remote control can be [Divers et al. 1982; Jayaraman et al. 1987; Goodman and Listak 1999].

---

[22]Jayaraman et al. [1988] describe experiments at a mine where the operator used a modified cutting procedure to deal with a high level of quartz dust that originated from cutting a sandstone floor. The miner sumped into the coal face about 6 inches above the floor and sheared upwards. The bench on the floor was then trimmed separately. This change, combined with a curtain to confine the dust cloud during removal of the slab, cut the dust concentration in half and also cut the quartz percentage in half.

[23]A downside of remote control is that it may remove the operator from a location that is protected from roof falls, such as the cab of a continuous miner.

Remote control is one of the best, if not *the* best, dust control available for all kinds of mining machinery.

Antirollback water spray system. A way to counter rollback resulting from low air velocity is to use an antirollback spray system (figure 2-7) [Jayaraman et al. 1984]. Most conventional spray systems consist of multiple nozzles (15 to 30) located across the top and along the side of the miner boom. Jayaraman et al. [1984] showed that many water spray systems produce enough air turbulence to overwhelm the primary airflow, causing dust rollback. Spray system characteristics that promote rollback are:

(1) High spray pressure (over 100 psi), which increases air turbulence at the face more than it suppresses dust. Tests have shown that a moderate spray pressure of 100 psi, measured at the nozzle, is a practical maximum pressure. However, water flows should be as high as possible. The spray pressure is measured by removing a nozzle and attaching a hose that leads to a pressure gauge.

(2) Top and side sprays with wide-angle cones that purposely overspray the cutter head or are set on the boom too far back from the cutter head. The longer the spray path, the more air is set in motion, and this air movement stirs up dust. A typical miner spray does most of its airborne dust collection in the first 12 inches; thus, top and side nozzles should be arranged for "low" reach and no overspray (figure 2-7, *A* and *B*). Flat fan sprays delivering about 1 gpm per nozzle are best suited for this application since the entire flow from the nozzle can be directed onto the cutter head. Underneath the boom, deluge-type nozzles delivering about 5 gpm per nozzle should be used to wet the broken coal. These nozzles should be mounted in a protected location close to the edge of the boom to ease servicing.

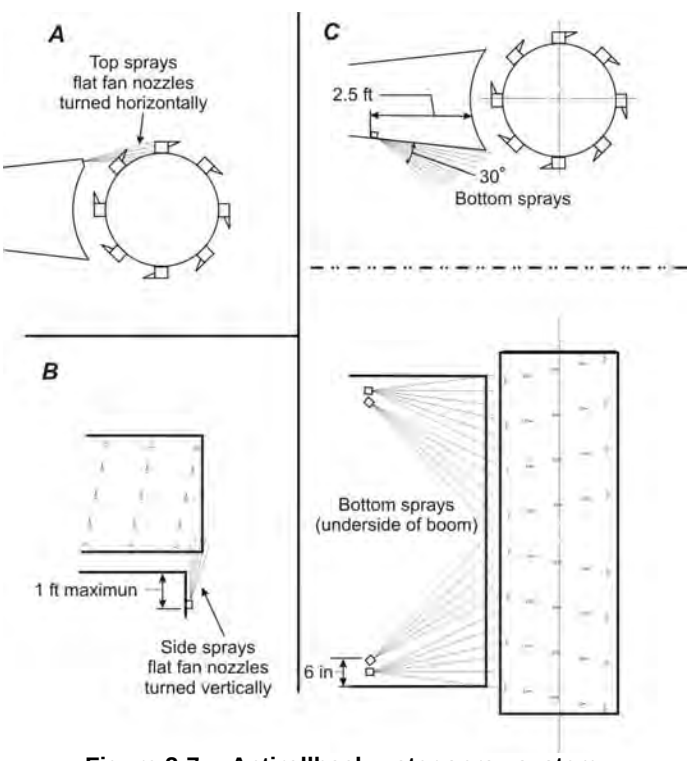

Figure 2-7.—Antirollback water spray system.

In underground trials, the antirollback spray system reduced dust levels at the operator's position by 40%[24] compared to conventional sprays.

Good water filtration. Dirt and rust particles in the water line cause frequent clogging of spray nozzles. A simple, nonclogging water filtration system is available to replace conventional spray filters [Divers 1976]. The system consists of an in-line Y-strainer to

[24]Without using the underboom sprays.

remove the plus 1/8-in material, a hydrocyclone to remove most of the remaining particles, and a polishing filter to remove the few particles that are not trapped by the hydrocyclone during startup and shutdown of the spray system. A new type of removable manifold that facilitates the quick changing of clogged sprays can also be used. To construct it, obtain a piece of 0.5-in wall pipe that is 0.5- to 2-ft long, depending on the intended location. Cut a lengthwise slot in the pipe. Weld the pipe to the miner with the slot facing forward. Fabricate a conventional spray bar from a second piece of pipe that slides into the slotted heavy wall pipe with the nozzles keyed into the slot and aimed out of the slot. Devise some means to hold the smaller pipe in place so that it can be removed to service the nozzles.

Regular bit replacement. Routine inspection of the cutting drum and replacement of dull, broken, or missing bits improves cutting efficiency and helps to minimize dust. Also, Organiscak et al. [1996] showed that bits designed with large carbide inserts and smooth transitions between the carbide and steel shank typically produce less dust.

Reduction of intake dust. Intake dust is often overlooked as a source of dust overexposure. Intake sources may include movement of outby equipment on dry roadways, feeder-breakers, and conveyor belts. Methods to reduce conveyor belt dust are described in chapter 6 on hard-rock mines. Methods to reduce haul road dust are described in chapter 5 on surface mines. Potts and Jankowski [1992] measured the dust level impact of using belt air for face ventilation, both on continuous miner and longwall sections.

Bolter dust collector maintenance. Occasionally, a malfunctioning bolter dust collector upwind of the miner will produce enough quartz dust to raise the exposure of the continuous miner operator. This is more likely to create a compliance problem on sections that are on reduced (more stringent) standards because of quartz in the coal. In such instances, additional quartz from the bolter, even in small amounts, will have significant impact. As much as 25% of the continuous miner operator's quartz dust exposure can be attributed to dust from the bolting operation. The problem is usually a lack of maintenance on the bolter dust collector.

DUST CONTROL FOR ROOF BOLTERS

Dust at bolter faces originates from the continuous miner if it is upwind or from a malfunctioning dust collector at the bolter itself. In most instances, high dust exposures are easily remedied.

Dust from upwind sources. If the bolter dust collection systems are operating properly, most of the bolter operator's dust exposure is generated by the continuous miner when it is upwind. The best way to reduce this bolter exposure is to use double-split ventilation. If single-split ventilation is being used, then the cutting sequence must be designed to limit the amount of time that the continuous miner is upwind.

If the continuous miner has a scrubber and the bolter dust exposure is still high, the scrubber should be checked to ensure that it is operating properly. Other techniques for reducing the dust level of personnel downwind of a continuous miner have been described by Jayaraman et al. [1989].

Dust from the bolter. While most of the roof bolter operator's dust exposure comes from upwind sources (e.g., the continuous miner), some bolting machines allow a significant amount of dust to escape the dust collector system, thus contaminating the region around the bolter. Such contamination is more likely when an insufficient amount of clean air is available to dilute the dust.

When dry dust collection systems are leaking, dust emission from the blower exhaust is the most common problem. It is usually caused by damaged or improperly seated filters. Also, many roof bolter dust collectors show accumulations of dust between the filters and blower, which results from past or current filter leaks. With the filters removed and the access door open, this dust can be removed by back-flushing the system with compressed air or by running the blower for several minutes.

Proper disposal of the dust that accumulates in the dust collector box can be important, since this dust is easily stirred up by mine traffic if just dumped onto the middle of the mine floor. Goodman and Organiscak [2002] compared two methods of cleaning the dust collector box. One was the common practice of using a metal rake to scrape the cuttings out of the collection box onto the mine floor. A second method was to collect the dust in a bag contained within the largest compartment of the dust box. When full of dust, the bag is carried to the rib and gently dumped. Comparisons of the bag versus the metal rake for cleaning the dust box showed that respirable coal dust and respirable silica dust exposures for the bolter operators dropped by a factor of two when the bag was used. Disposable bags are now available for some bolters.

Dust from the drill hole can also pose a problem. A visible plume from the collar of the drill hole is a sign of inadequate airflow to the chuck or bit. The air leaks that cause inadequate airflow occur mainly at loose hose connections, through the pressure relief valve, and through poorly fitting dust collector access doors. It is common to find as much as 50% leakage.

The bit type also makes a difference in the dust escaping from the drill hole. In one study, shank-type bits allowed from 3 to 10 times more dust to escape from the drill hole collar than "dust hog" bits [USBM 1985a]. Most of this dust escaped during the first few inches of bit penetration. Typically, the dust hog bits generate one-fifth of the dust generated by the shank bits in the initial 12 inches and one-third of the dust over the full length of the hole.

Some years ago, MSHA did a survey to evaluate the effectiveness of improved maintenance on dry dust collection systems [Thaxton 1984]. During the survey, the mine operators replaced all duct hoses, filters, and the blower muffler, repaired the vacuum system and dust box seals, and cleaned the blower unit. Results showed major improvements in both the quartz percentages and the dust levels.

A small proportion of roof bolters use wet systems to control dust. In wet systems, hollow drill steels are used to deliver low-pressure water (2 gpm per chuck) to the bits. These systems offer improved bit life, faster drilling, and excellent dust control. However, wet drilling can create problems in coal mines that cannot tolerate additional water on the mine floor. Also, leaking water seals can splash water over the bolter operators, making for unpleasant working conditions. As a result, good maintenance of all seals is important.

REFERENCES

Colinet JF, Jankowski RA [1996]. Dust control considerations for deep-cut faces when using exhaust ventilation and a flooded-bed scrubber. Transactions SME, Vol. 302. Littleton, CO: Society for Mining, Metallurgy, and Exploration, Inc., pp. 104-111.

Colinet JF, Jankowski RA [2000]. Silica collection concerns when using flooded-bed scrubbers. Min Eng *52*(4):49-54.

Colinet JF, McClelland JJ, Jankowski RA [1991]. Interactions and limitations of primary dust controls for continuous miners. Pittsburgh, PA: U.S. Department of the Interior, Bureau of Mines, RI 9373. NTIS No. PB91-241257.

Courtney WG, Jayaraman NI, Behum P [1978]. Effect of water sprays for respirable dust suppression with a research continuous-mining machine. Pittsburgh, PA: U.S. Department of the Interior, Bureau of Mines, RI 8283. NTIS No. PB 279 881.

Divers EF [1976]. Nonclogging water spray system for continuous mining machines: installation and operating guidelines. Pittsburgh, PA: U.S. Department of the Interior, Bureau of Mines, IC 8727. NTIS No. PB 265-934.

Divers EF, Jayaraman NI, Custer J [1982]. Evaluation of a combined face ventilation system used with a remotely operated mining machine. Pittsburgh, PA: U.S. Department of the Interior, Bureau of Mines, IC 8899. NTIS No. PB83-156794.

Fields KG, Atchison DJ, Haney RA [1990]. Evaluation of dust control for deep cut coal mining systems using a machine mounted collector. In: Proceedings of the 1990 International Symposium on Respirable Dust in the Mineral Industries, pp. 349-353.

Goodman GVR, Listak JM [1999]. Variation in dust levels with continuous miner position. Min Eng *51*(2):53-58.

Goodman GVR, Organiscak JA [2002]. An evaluation of methods for controlling silica dust exposures on roof bolters. SME preprint 02-163. Littleton, CO: Society for Mining, Metallurgy, and Exploration, Inc.

Graumann K, Gastberg I [1984]. Ventilating the roadhead of drivages headed with boom-type machines (in German). Gluckauf *120*(15):967-973. Also available in English: Gluckauf Translation *120*(15):264-267.

Hole BJ, von Glen FH [1998]. Dust capture effectiveness of scrubber systems on mechanical miners operating in larger roadways. Final report on project COL 310. Johannesburg, Republic of South Africa: Bluhm Burton Engineering. Available from Safety in Mines Research Advisory Committee (www.simrac.co.za).

Jayaraman NI, Babbitt CA, O'Green J [1989]. Ventilation and dust control techniques for personnel downwind of continuous miner. Transactions SME, Vol. 284, Littleton, CO: Society for Mining, Metallurgy, and Exploration, Inc., pp. 1823-1826.

Jayaraman NI, Colinet JF, Jankowski RA [1992]. Recent basic research on dust removal for coal mine applications. In: Proceedings of the Fifth International Mine Ventilation Congress (Johannesburg, Republic of South Africa), pp. 395-405.

Jayaraman NI, Divers EF, Derick RL, Babbitt C [1986]. Evaluation of a new half-curtain technique for continuous miner faces. In: Proceedings of the Symposium on Respirable Dust. University Park, PA: The Pennsylvania State University.

Jayaraman N I, Kissell FN, Schroeder W [1984]. Modify spray heads to reduce dust rollback on miners. Coal Age *89*(6):56-57.

Jayaraman NI, McClelland JJ, Jankowski RA [1988]. Reducing quartz dust with flooded-bed scrubber systems on continuous miners. In: Proceedings of the Seventh International Pneumoconiosis Conference (Pittsburgh, PA), pp. 86-93.

Jayaraman NI, Stritzel DL, Jankowski RA [1987]. Improving health, safety, and productivity through the use of machine-mounted scrubbers. In: Proceedings of the 95th Annual Meeting of the Illinois Mining Institute (Mount Vernon, IL), pp. 62-75.

Matta JE [1976]. Effects of location and type of water sprays for respirable dust suppression on a continuous mining machine. Pittsburgh, PA: U.S. Department of the Interior, Bureau of Mines, TPR 96. NTIS No. PB 254 677.

Noack K, Hinderfeld G, Marx W-E, Marth W [1989]. Latest developments with ventilation techniques, water spray systems and gas emission judging methods in machine-driven headings. In: Proceedings of the 23rd International Conference of Safety in Mines Research Institutes (Washington, DC, Sept. 11-15, 1989). Pittsburgh, PA: U.S. Department of the Interior, Bureau of Mines, pp. 914-926. NTIS No. 89-225262/AS.

Organiscak JA, Khair AW, Ahmad M [1996]. Studies of bit wear and respirable dust generation. Transactions SME, Vol. 298. Littleton, CO: Society for Mining, Metallurgy, and Exploration, Inc., pp. 1874-1879.

Potts JD, Jankowski RA [1992]. Dust considerations when using belt entry air to ventilate work areas. Pittsburgh, PA: U.S. Department of the Interior, Bureau of Mines, RI 9426.

Schultz MJ, Fields KG [1999]. Dust control considerations for deep cut mining sections. SME preprint 99-163. Littleton, CO: Society for Mining, Metallurgy, and Exploration, Inc.

Taylor CD, Kovscek PD, Thimons ED [1996]. Monitoring air flow through a machine-mounted dust scrubber. Appl Occ Env Hyg *11*(7):813-816.

Thaxton RA [1984]. Maintenance of a roof bolter dust collector as a means to control quartz. In: Proceedings of the Coal Mine Dust Conference (Morgantown, WV, Oct. 8-10, 1984), pp. 137-143.

U.S. Bureau of Mines [1985a]. Technology news 219: Reducing dust exposure of roof bolter operators. Pittsburgh, PA: U.S. Department of the Interior, Bureau of Mines.

U.S. Bureau of Mines [1985b]. Technology news 220: How twelve continuous miner sections keep their dust levels at 0.5 mg/m^3 or less. Pittsburgh, PA: U.S. Department of the Interior, Bureau of Mines.

CHAPTER 3.—LONGWALL DUST CONTROL

By Fred N. Kissell, Ph.D.,[25] Jay F. Colinet,[26] and John A. Organiscak[27]

In This Chapter

- ✓ Which dust source to address first
- ✓ How much air and water are needed
- ✓ Keeping dust out of the walkway
- ✓ Moving workers upwind
- ✓ Dealing with the stageloader-crusher
- ✓ Gob and wing curtains to aid airflow
- ✓ The shearer-clearer system
- ✓ Modified support movement practices

and

- ✓ Dust control for future longwalls

Controlling longwall dust is not easy. Longwall production levels are high, and there are several different sources of dust to contend with. If dust levels are high, the initial effort should be devoted to finding which source is the cause. Then, efforts to reduce dust can be concentrated where they will have the most impact.

To control dust at longwalls, a large amount of ventilation air and spray water must be used. The water must be sprayed correctly so as not to blow dust into the walkway. Techniques to change local airflow patterns can be helpful. The shearer-clearer, as well as gob and wing curtains, are examples of such techniques.

DECIDING WHICH DUST SOURCE TO ADDRESS FIRST

If a longwall is out of compliance with dust standards, knowing where the extra dust is coming from helps to get back in compliance quickly.

The four major sources of dust at longwall faces are (1) the shearer, (2) the shields, (3) the stageloader-crusher, and (4) the intake. Finding the source of the extra dust involves two tasks.

---

[25]Research physical scientist.
[26]Supervisory mining engineer.
[27]Mining engineer.
Pittsburgh Research Laboratory, National Institute for Occupational Safety and Health, Pittsburgh, PA.

First, the dust from each source must be measured. Second, these measurements must be compared to previous samples or to results from other longwalls in order to discover which dust source is causing the problem.

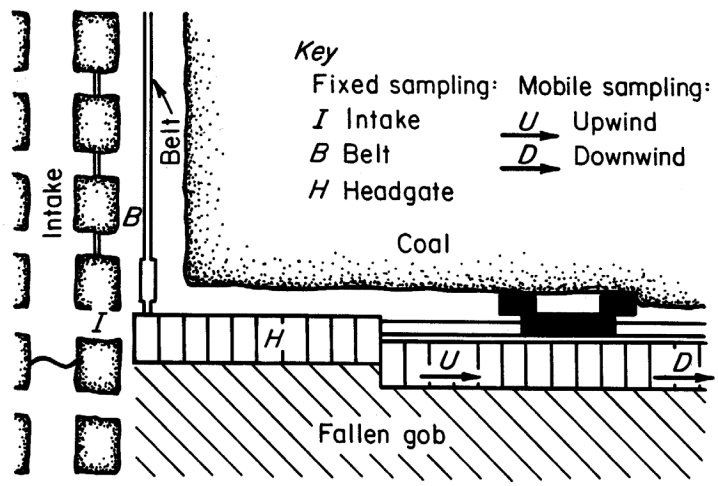

Figure 3-1.—Longwall dust sampling locations.

Finding the amount of dust from each source. The first task is to take dust samples to measure the amount of dust from each source. Initially, fixed-site on-section[28] dust samples should be taken at locations I and H shown in figure 3-1. Location I gives the intake dust level. Location H is at shield 10 and includes the intake dust in addition to the stageloader-crusher dust. The stageloader-crusher dust is obtained by subtracting the dust level at I from the dust level at H. To ensure reasonable accuracy, a package of at least two samplers should be used for three shifts.

If belt air is used to ventilate the longwall face, the belt air dust concentration at location B should be measured. If the airflow at both B and I is measured, a corrected average concentration from the two locations can be calculated.[29] The concentration at H then reflects[30] the addition of the stageloader-crusher dust[31] to the intake and belt dust.

Separating out shearer dust is a harder task. It requires two people who follow the shearer as it cuts. Each person carries several dust samplers. One stays upwind of the shearer (location U in figure 3-1); the other stays downwind of the shearer (location D in figure 3-1). The shearer dust contribution is the difference between the upwind and the downwind dust concentration values,[32] locations U and D.

Shield dust is measured in the same way, using upwind and downwind measurements, except that the sampling pumps are turned on only during the head-to-tail pass to minimize background dust levels. One person stays 25 ft upwind of shield movement; the other stays 25 ft downwind[33]

---

[28]On-section means that sampling is done while the shearer is operating, not portal to portal.

[29]If the concentration and airflow at I are C_I and Q_I and at B are C_B and Q_B, then the corrected average concentration is $[(C_I Q_I) + (C_B Q_B)] / [Q_I + Q_B]$.

[30]The reason that concentration (mg/m^3) is used instead of dust make (mg/sec) is that the dust make value is subject to error caused by air loss into the gob, which takes place between locations I and H.

[31]The concentration measured at H will contain a small amount of shearer dust from the cutout at the headgate. This error can be eliminated by turning off the sampling pump when the shearer is upwind of shield 10.

[32]This assumes that shield movement is far enough from the shearer to be subtracted out.

[33]The 25-ft value is approximate and may vary slightly depending on circumstances. If the downwind person gets too close to the shearer, the samplers will be biased upwards by shearer dust. If the downwind person gets too close to the moving shields, the samplers will be biased upwards because the shield dust, which falls mostly into the walk-

of shield movement. This "mobile sampling" has been described more fully by Colinet et al. [1997] and Srikanth et al. [1995].

Source comparison with other longwalls. Once sampling is completed, the results should be compared to earlier results obtained at the same mine or to other longwalls. Colinet et al. [1997] give dust source contributions obtained from a survey of 13 longwalls (table 3-1). The average percent values reflect the average contribution of a given source. For example, on average, intake sources account for 9% of the dust at the longwalls that were surveyed.

The concentration values in table 3-1 reflect dust levels measured *only when the shearer was operating*, using the sampling locations shown in figure 3-1 and explained in the accompanying text. Except for the intake, the values shown represent the difference between the upwind and downwind dust concentration values. They are *not* personal exposure values.

Any dust source showing a contribution greater than the median value of table 3-1 is a likely source of the extra dust that has caused the longwall to go out of compliance.

Table 3-1.—Dust source contribution values from 13 longwalls [Colinet et al. 1997]

SOURCE	AVERAGE PERCENT	CONTRIBUTION MEDIAN	CONTRIBUTION RANGE
Intake	9	0.33 mg/m^3	0.07-1.1 mg/m^3
Stageloader-crusher	15	0.78 mg/m^3	0.29-1.3 mg/m^3
Shields	23	1.8 mg/m^3	0.67-2.3 mg/m^3
Shearer	53	3.5 mg/m^3	0.7-8.8 mg/m^3

BASIC LONGWALL DUST CONTROL TECHNIQUES

Basic techniques are those widely used to control dust, applicable at every longwall. Mine operators can use high water and airflows and take measures to avoid blowing dust into the walkway. They can also move workers upwind, reduce dust from the stageloader-crusher, use a gob curtain, and use a shearer-clearer system.

Raising airflow to control dust. Raising the airflow provides some benefit when the existing face air velocity is below 600 ft/min [Organiscak and Colinet 1999]. Over the years, longwall air quantities have risen to compensate for higher production levels [Haney et al. 1993; Ondrey et al. 1994]. A survey by the Mine Safety and Health Administration in 1999 showed that longwalls

---

way, has not fully mixed into that portion of the airflow moving through the shield legs and down the panline. See figure 3-5 and the accompanying explanation.

had an average intake air quantity of 71,000 cfm[34] and an average headgate-end face velocity of 650 ft/min. Eighteen percent of longwalls exceeded 100,000 cfm in the intake airways. This high air quantity helps to control respirable dust by providing better dilution of dust sources.[35]

For many years, there has been a concern that high air velocities would entrain settled dust. However, 10% of longwalls now have face air velocities exceeding 1,000 ft/min without experiencing any evident[36] entrainment problems. This lack of dust entrainment is probably due to high water application rates in conjunction with shield washing.

Using water to control dust. Dust generated by the shearer is reduced by increasing the quantity of water *supplied to the shearer drums*, so it is important to supply as much water as possible to the drums. In two separate studies, water flow to the shearer drums was increased about 50% and dust levels at the shearer were reduced about 40% [Shirey et al. 1985]. In a survey of 13 longwalls, Colinet et al. [1997] report an average shearer water flow of 100 gpm, almost all of it to the drums.

The number of sprays and the type of spray nozzle chosen are important for best dust control performance. For example, pick-point sprays at the outer edge of the vanes, now commonly used, are superior to the old cavity-filling sprays that were mounted on a pipe welded to the side of the vane [Jankowski et al. 1987]. Also, the greater the number of sprays, the more thoroughly water is mixed with the broken coal. In a test that varied the number of sprays, Bazzanella et al. [1986] showed that dust suppression is improved by increasing the number of sprays on a shearer drum, even when the total water flow and nozzle pressure were held constant with the use of smaller orifice nozzles. When 46 smaller orifice nozzles were substituted for the 17 original nozzles, dust was reduced by 60%. This finding shows that there should be at least one spray for each pick on the drum.

Design of the water supply system is an important consideration if sprays are to be effective. Each water split should have its own flow meter and pressure gauge for convenient monitoring. All of the system components must be sized for the anticipated water flows, with particular attention devoted to the size of the pipe that goes through the ranging arm and connects to the feed lines in the drum spiral. Water filtration is often a source of headaches. The coarsest filter mesh size that can normally be used is 50 micron, and the stream of water should not bypass the filter mesh when it plugs up.

Avoiding the migration of dust into the walkway. Since water sprays are known to entrain air and generate their own local air currents, they must be used in a way that allows dust from the drums to hug the face and not be blown out into the walkway. Figure 1-4 illustrates how sprays

---

[34]For mines in coal under 8 ft, the average was 66,000 cfm; for mines 8 ft or more, 87,000 cfm.

[35]While increases in airflow are applicable at every longwall, it does not follow that such increases are always feasible. Depending on the age of the mine and the design of the ventilation system, major ventilation increases are not always practical. Such mines will have to depend more on the other dust controls.

[36]Evident from underground measurements, at least. Recently, Listak et al. [2001] conducted lab studies to assess the impact of higher face velocities on shield dust. Dry (1% moisture) mixed-size particulate was dropped into an airstream flowing in a horizontal wind tunnel. Surprisingly, airflow increases resulted in much higher dust concentration levels.

on the body of a longwall shearer can actually *raise* the shearer operator=s dust level by blowing dusty air into the walkway. Because of this air-entrainment effect, it is generally better not to have sprays mounted on the shearer body, unless they are part of a "shearer-clearer" configuration as described below.

Despite the need to keep sprays off of the shearer body, the motor cooling water must be discharged somewhere. The recommended location for these sprays is low on the end of the shearer, pointed straight down onto the panline so that they wet the coal on the panline and cause little air entrainment [Jankowski and Hake 1989].[37]

Excessive pressure on the drum sprays also blows dust into the walkway. In two separate studies [Pimentel et al. 1984; Kok and Adam 1986], the water pressure of the drum sprays was increased from 75 to 115 psi and 80 to 150 psi, respectively. In both instances, dust exposure of the shearer operators increased by 25% because the higher pressures on the trailing drum blew the dust into the walkway. Thus, the best drum spray pressure is in the range of 80 to 100 psi. Because of the tendency of high-pressure sprays to blow dust into the walkway, the water flow rate should always be raised by increasing the nozzle orifice size rather than the operating spray pressure.[38] However, when the nozzle pressure is below 80 psi, the sprays may plug with coal particles pushed in from the outside.

Moving workers upwind. Although measures can be taken to reduce the migration of dust into the walkway, the shearer-generated dust cloud at the face soon spreads from the panline to envelop the entire longwall face cross-section. Because of this dust cloud spreading, any mining practice or technology development that moves workers upwind of the shearer drums and moving supports is helpful. For example, use of remote control on shearers can significantly reduce dust exposure of the machine operators. A survey by the U.S. Bureau of Mines [1984] showed that exposure was reduced 68% by moving the operator just 20 ft upwind of the shearer body. Particular attention should be paid to the location of the tailgate-end shearer operator, who should always be positioned upwind of the tailgate-end drum to reduce dust exposure.

Shearer operators can further reduce their dust exposure by moving as far upwind at the headgate as possible as the shearer cuts out at the headgate.

Reducing dust from the stageloader-crusher. The stageloader-crusher can be a major dust source on longwall faces. To reduce this dust, the stageloader-crusher is enclosed with steel plates and strips of conveyor belting. All seals and skirts must be carefully maintained to ensure that dust stays inside the stageloader-crusher enclosure. Several sprays are mounted on internal spray bars, which usually span the width of the conveyor. Recommended spray bar locations are the mouth of the crusher, the discharge of the crusher, and at the stageloader-to-belt transfer point. Water pressure should be maintained below 60 psi, since high-pressure sprays may actually force dust out of gaps in the enclosure and into the intake air. During underground trials, covering the stageloader and adding spray manifolds to boost the water flow from 10 to 20 gpm yielded dust reductions of 79% at the headgate operator and 41% at support 20 [Organiscak et al.

[37] Some mines use the cooling water to wash the shearer haulage track.

[38] The spray pressure is measured by removing one spray nozzle and attaching a hose that leads to a pressure gauge.

1986; Kelly and Ruggieri 1990b].[39] The most important spray bar is the one located on the discharge side of the crusher [Jayaraman et al. 1992].

A few operators have attached dust collectors to the stageloader enclosure. This yielded no better results than just covering the stageloader and adding internal spray manifolds [Jayaraman et al. 1992]. Still, if enclosing the stageloader and adding internal sprays are not sufficient, a dust collector attached[40] to the stageloader is the next step.

Reducing dust from the intake. While the intake is usually the least significant source of longwall dust, it cannot be ignored. Reductions in intake dust from using homotropal ventilation, cleaning the panel belt, and adding water to the intake roadway have been discussed by Organiscak et al. [1986]. Other methods to reduce roadway dust are discussed in chapter 5 on surface mining. For mines that use belt air, the reduction of conveyor belt dust is discussed in chapter 6 on hard-rock mines. Work crews in the intake will often stir up dust, and rescheduling of work may be necessary.

Using a gob curtain to aid airflow. A gob curtain is a brattice curtain installed from the roof to the floor between the first support and adjacent rib in the headgate entry. It prevents air from leaking into the gob, forcing more of the ventilation airflow to make a 90º turn and stay on the face side of the supports (figure 3-2). This permits more dilution of dust in the region of the face near the headgate. Without a gob curtain, a substantial portion of intake air will pass into the gob, moving laterally behind the supports. During underground trials, the average face air velocity with the curtain installed was 35% greater than that without the curtain [Jankowski et al. 1993]. The most significant improvement was seen for the first 25 to 30 supports.[41]

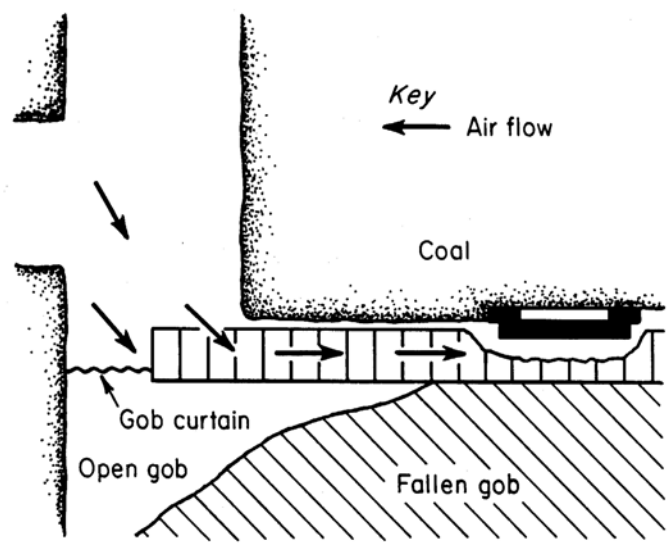

Figure 3-2.—Gob curtain forces air to stay on longwall face.

Gob curtains also have a secondary benefit. When less air enters the gob, then less air returns to the face halfway down the shield line. Therefore, dust generated by gob falls is less likely to be entrained and carried back onto the face.

Using the shearer-clearer system. A large portion of U.S. longwalls use a water spray system called a shearer-clearer, specifically designed to hold shearer-generated dust against the face. The shearer-clearer

[39]These were old studies done at low (by today's standards) production levels. Much higher water flows are necessary for today's longwalls.

[40]A dust collector on the stageloader will see a very high particulate load, so horizontal ductwork should be avoided and access doors for cleanout should be provided.

[41]Some operators use curtains or conveyor belt strips to seal the gaps between the first few shields. No data are available on how well this works to keep air on the face.

takes advantage of the air-moving capabilities of water sprays to direct the dust cloud downwind along the panline, which prevents it from spreading out into the walkway (figure 3-3). The system consists of several shearer-mounted water sprays, oriented downwind, and one or more passive barriers, which split the airflow around the shearer into separate clean and contaminated air streams (figure 3-4).

The air split in the shearer-clearer system is started by a splitter arm, with a strip of conveyor belting hanging from the splitter arm down to the panline. This belting extends from the top gobside corner of the shearer body to the cutting edge of the upwind drum. A spray manifold mounted on the splitter arm confines the dust cloud generated by the cutting drum, further enhancing the air split. The dust-laden air is drawn over the shearer body and held against the face by spray manifolds positioned between the drums on the face side of the machine. The air is then redirected around the downwind drum by a set of sprays located on the downwind end of the shearer. Operating pressure must be about 150 psi,[42] measured at the nozzle, to ensure effective air movement. Total water flow rate with all sprays operating is about 12 gpm.

In underground tests, the shearer-clearer reduced operator exposure from shearer-generated dust by at least 50% when cutting against the ventilation and 30% when cutting with the ventilation [Ruggieri et al. 1983; Jayaraman et al. 1985].[43]

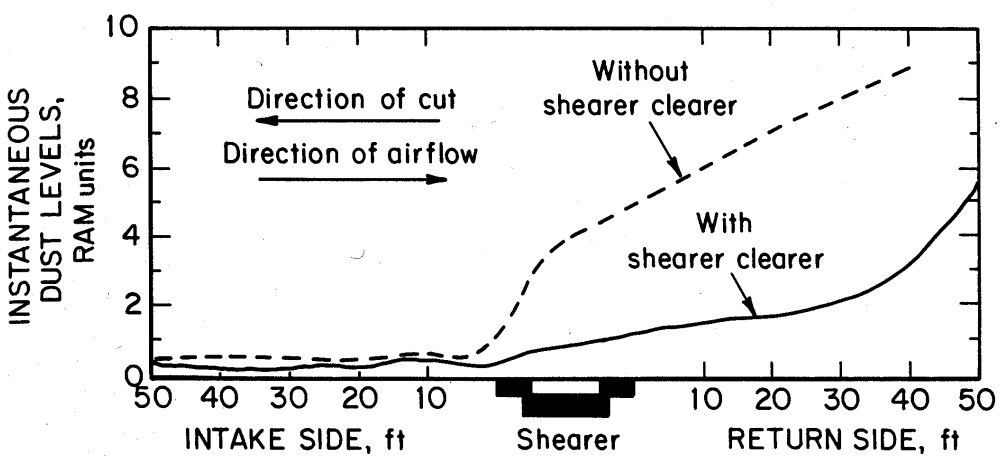

Figure 3-3.—Typical respirable dust concentration profile around the shearer during the tail-to-head pass.

[42]Proper pressure and spray placement are important if the expected reduction in dust is to be realized [Ruggieri et al. 1983].

[43]Other experiments have been done to test a shearer-clearer in conjunction with passive barriers mounted on the shearer. The passive barriers gave no improvement in dust when added to the shearer-clearer. However, the passive barriers alone (without the shearer-clearer) gave a 25% reduction in shearer dust compared to the baseline (no barriers, no shearer-clearer) [Jankowski and Babbitt 1986; Kelly and Ruggieri 1990a].

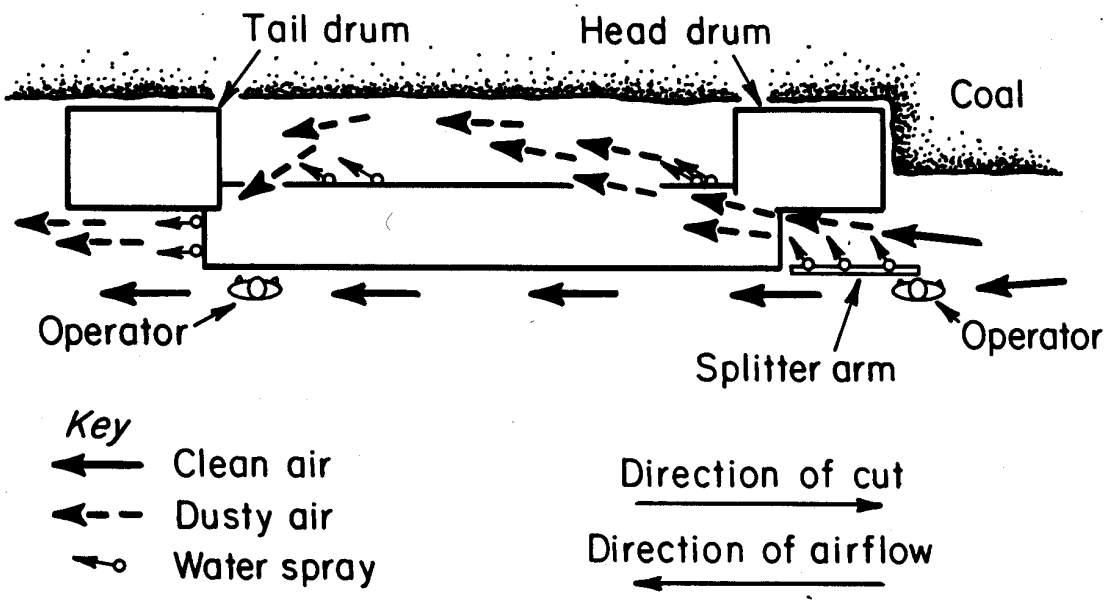

Figure 3-4.—Air currents when using the shearer-clearer system.

A helpful installation manual for the shearer-clearer is available [Ruggieri and Babbitt 1983].

Cutter drum maintenance. Routine replacement of badly worn, broken, or missing bits improves cutting efficiency and helps reduce dust. Also, bits designed with large carbide inserts and smooth transitions between the carbide and steel shank typically produce less dust [Organiscak et al. 1996a]. The water sprays should be serviced along with the bits, since the number of operating drum sprays greatly impacts the amount of dust generated [Bazzanella et al. 1986].

SITE-SPECIFIC LONGWALL DUST CONTROL TECHNIQUES

Site-specific techniques can be effective when allowed by the local geology and suitable to the type of equipment used. Mines can use unidirectional cutting, modify their support movement practices, and use a wing curtain to aid airflow.

Using unidirectional cutting. Some mines in very high coal use a unidirectional cutting sequence because it offers operational advantages. Unidirectional cutting allows somewhat greater flexibility to place workers upstream of dust sources than bidirectional cutting. If the primary cut takes place as the shearer moves in the head-to-tail direction, the leading drum that cuts most of the coal is downwind of both shearer operators and roof support movers. Dust surveys [USBM 1984] have shown that cutting in the head-to-tail direction yields dust levels about 40% less[44] than cutting in the tail-to-head direction.

On the other hand, if the primary unidirectional cut is in the tail-to-head direction, supports can be advanced just downwind of the shearer, keeping both shearer and support dust away from face workers. This cut direction works well when a shearer-clearer system is used to hold the dust against the face.

Whether unidirectional cutting can be done depends on the type of equipment used and the local roof conditions. A head-to-tail cut requires most of the coal and rock to pass under the shearer, and sufficient clearance under the shearer is required to prevent clogging. Also, a head-to-tail cut may not be necessary if shearer dust has been avoided in some other way, such as remote control. When the supports are advanced during the cycle will depend on how much the supports are adding to the overall dust problem and how long the freshly cut roof can stand without falling.

The downside of unidirectional cutting is that it may result in some loss in productivity by virtue of the reduction in cutting time. However, the cost of any expected productivity loss must be balanced against the cost of alternative dust controls.

The most common unidirectional sequence is to cut coal on the tail-to-head pass, closely following the shearer with the support advance. With this sequence, no workers are exposed to support-generated dust, and the shearer dust is held in check with a shearer-clearer system operated in conjunction with remote control.

Using modified support movement practices to reduce dust. During bidirectional cutting, support advance will occur in both cutting directions. Support movers can stay away from support dust by positioning themselves upwind of the moving supports.

During the head-to-tail cut, shearer operators are exposed to any dust generated by support movement. Support dust tends to be generated directly over the walkway, so under the moving support the concentration in the walkway will be higher than in the adjacent support legs or panline. As this support dust moves downwind, the walkway concentration declines as the walkway dust cloud mixes with the air moving down the panline and the air moving through the support legs. As a result, some mine operators find that support-generated dust can be diluted more before it reaches the shearer operators by increasing the distance between support advance and the shearer from 20 to 50 ft (figure 3-5).

---

[44]The 40% figure refers only to shearer-generated dust measured at the shearer. Use of shearer remote control could increase or decrease this value.

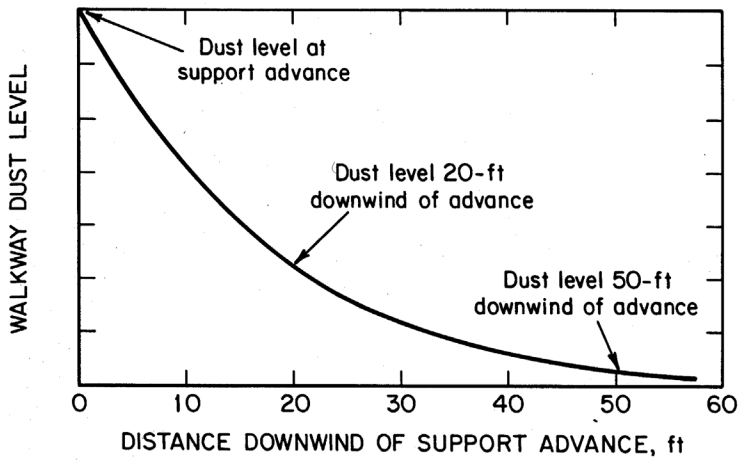

Figure 3-5.—Support dust in the walkway dilutes as it moves downwind [Organiscak et al. 1985].

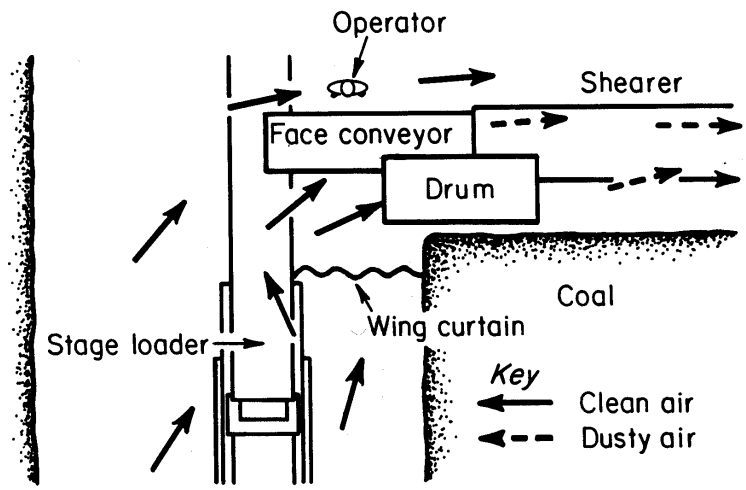

Figure 3-6.—Airflow at longwall headgate with a wing curtain.

During the tail-to-head cut, with shield advance following downwind, shields should be pulled as closely behind the shearer as possible. This keeps the shield movers ahead of the shearer dust cloud, which progressively spreads into the walkway as it moves downwind from the shearer. In this case, a shearer-clearer system may be of considerable help to the shield movers, since it holds the dust cloud over the panline for a greater distance downwind of the shearer, as shown in figure 3-3.

Water application on the immediate roof also may help to suppress some of the support dust generated during lowering, advancing, and resetting of the roof supports. The immediate roof can be wetted by spraying the roof with one or more narrow-angle water sprays mounted on top of the shearer body, directing water downwind at an upward 45° angle.

In addition, shield supports can be equipped with water sprays in the shield canopy that wet the broken roof debris on top of the shields. These achieve modest 25% reductions in shield-generated dust [Henke and Thiemann 1991], but are hard to maintain, especially since they soak the face workers. Mangolds et al. [1990] have reviewed the (mostly unsuccessful) attempts to control shield-generated dust.

Using a wing curtain to aid airflow. The purpose of a wing curtain is to shield the shearer operators from the very high concentrations of dust generated as the headgate drum cuts into the headgate entry. The high-velocity primary airstream passing over and through the drum entrains and carries large quantities of dust out into the walkway and over both operators. When a wing curtain is installed between the panel-side rib and the stageloader (figure 3-6), it shields the headgate drum from the airstream as the drum cuts out into the headgate entry.

The wing curtain is located 4 to 6 ft back from the corner of the face to provide maximum shielding without interfering with the drum. The curtain is only in place during the cutout operation

and is generally advanced every other pass. A wing curtain can reduce operator dust exposure by 50% to 60% during the headgate cutout [Jankowski et al. 1993; Cecala et al. 1987].

FUTURE POSSIBILITIES FOR LONGWALL DUST CONTROL

Because of longwall production increases over the years, there is a continuing demand for better dust control. This section discusses dust control methods that might be used at future longwalls. Some are newer methods. Others are older methods that have been little used because of higher cost or operating difficulties. Examples of future possibilities are advances in production technology, water infusion, foam, a face partition, and high-pressure drum sprays.

Advances in production technology. Any advance in longwall production technology that allows workers to move upwind of dust sources will reduce their dust exposure. This has already taken place through the use of remote control of shearers and batch control of shields.

The implementation of more advanced technology has been delayed because of practical operating difficulties with these systems. For example, control packages are now available for complete automation of shield movement; however, they are not yet in wide use.

Another advanced technology that offers lower longwall dust levels is the memory-cut system in which a computer logs the precise height of the drums as the shearer moves across the face. With such a system, the operators make the initial cut, and the computer controls several subsequent cuts while the operators wait in a less dusty location. Several memory-cut systems have been sold to mine operators. Again, they are not yet in regular use because of practical operating difficulties.

Nothing works as well as measures that put workers upwind of dust sources. Because of this, any new technology that moves workers upwind can greatly reduce their dust exposure [Organiscak et al. 1996b].

High-Pressure Inward-Facing Drum Sprays. High-pressure water can have a significant impact on shearer-generated dust. The basic concept is to use high-pressure drum sprays to improve wetting of the coal and improve the airborne capture efficiency of the sprays. The nozzles are angled inward to avoid blowing the uncaptured dust cloud out into the walkway.

An underground evaluation of high-pressure, inward-facing drum sprays gave good results [Jankowski et al. 1989]. Of those tested, the most effective spray system was the 30°, 800-psi

configuration. Not only was the dust reduction greater (39%), the concentration was lower at all sampling sites using this configuration. Also, wetting of the coal was improved since intake dust levels along the face were reduced by about 45%.

A drawback of high-pressure sprays is that the small-orifice nozzles tend to clog unless the water is very clean. Also, space has to be found on the shearer for a booster pump or the pump located outby with a high-pressure line running to the shearer. Neither alternative may be feasible.

Solid-stream (jet) sprays. Some preliminary longwall tests during the 1980s [Kost et al. 1985; Jankowski et al. 1987] showed that using solid-stream (jet) sprays on the shearer drum yielded 30% less dust at the shearer operator position than the conventional conical sprays. Whether this dust reduction was due to better wetting of the coal or less boil-out from the drum is not clear. Followup tests to confirm these results under a variety of conditions were never done.

Foam. Tests in two mines have shown that foam works well to lower dust when it is released from nozzles located on the shearer drums. In the first mine, the shearer operator dust exposure was cut by 56% compared to conventional water sprays on the drum. In the second mine, operator dust exposure was cut by 84%, and the dust level at the tailgate declined by 78% compared to water sprays [Laurito and Singh 1987; USBM 1989]. Also, during the test the foam system used less water than the conventional sprays.

A test in a third mine measured the impact of foam applied with nozzles located on the ends of the shearer body. The effectiveness of this external foam application was less than 20%, indicating that for foam to be effective, it must be applied through the shearer drums so as to be thoroughly mixed with the coal.

Long-term tests to assess feasibility and cost of foam at longwalls have not been done.

Face partition. The concept of a face partition is to maintain two parallel splits of air along the longwall face by a transparent mesh partition (figure 3-7). This partition acts to retard the spread of shearer-generated dust into the walkway, reducing the dust exposure of the shearer operators and roof support movers [Organiscak and Leon 1993; Organiscak 1999]. During testing, a 1/8th-inch mesh partition was hung from the roof supports to separate the walkway from the panline. When the partition stayed parallel to the face, walkway dust was cut in half. However, where supports were being advanced, there was always a short segment of mesh partition perpendicular to the airflow. This perpendicular segment caused a decline in partition effectiveness. Overall, the results were mixed.

Water Infusion. To infuse a coal seam, boreholes are drilled into the coal seam ahead of mining and large volumes of water are pumped in under high pressure to wet the coal [McClelland et al. 1987; Lama and Liu 1992; Stricklin 1987]. Water infusion has been used occasionally by mine operators for several decades. Although it is not widely used because of high cost, water infusion

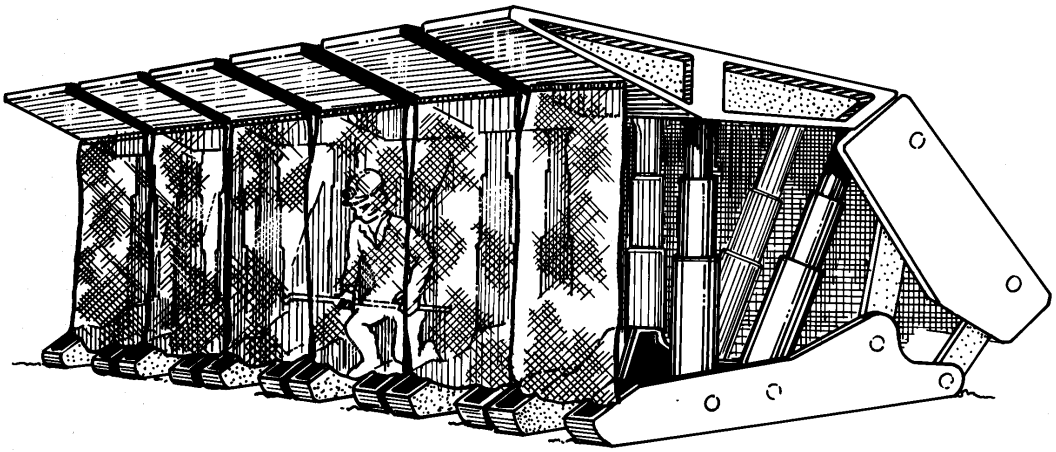

Figure 3-7.—Transparent mesh partition retards the spread of shearer dust into the walkway.

of coal seams will reduce dust by about 50% in those seams that can be infused.[45] Many coal seams cannot be infused. Water infusion is much more economical if the holes have already been drilled to remove methane gas.

Homotropal ventilation. With homotropal ventilation, intake air is routed up the tailgate entries and across the longwall face from tailgate to headgate, where it then passes into the gob. A separate split of air must be routed up the headgate entry to keep the headgate operator out of dusty return air [Stevenson 1985].

Because air routed up the tailgate entries is free from the headgate-side dust sources, the dust exposure of workers on the face is lower. The disadvantages of homotropal ventilation are that the tailgate-side entries must be kept in good condition and the gob at the headgate must remain open. Otherwise, the flow of air will be restricted. Keeping the tailgate entries and the headgate side of the gob open may require additional cribbing [Kelly and Jankowski 1984]. Homotropal ventilation may only be feasible in a small proportion of mines.

Water proportioning. While it is well-known that more water added to the shearer drums will reduce dust, the maximum amount of water that can be added is usually limited by operational problems (such as softer clay floors and slipping conveyor belts) that are created by excessive water. Since the upwind drum is usually the one that contributes the most to worker dust exposure, some success in reducing dust might be obtained by proportioning more water to the upwind drum. However, solid evidence for an overall benefit is lacking [Kok and Adam 1986].

[45]Many coal seams cannot be infused because of nonuniform seam permeability.

REFERENCES

Bazzanella A, Becker H, Kemper F [1986]. Staubbekampfung in abbaubetrieben mit schneidender kohlengewinning. Gluckauf *122*(11):728-735. Also available in translation as: Dust suppression in shearer faces, Gluckauf Translation *122*(11):204-207.

Cecala AB, Organiscak JA, Jankowski RA [1987]. Methane and dust controls for headgate cut-outs. Min Sci & Technol *4*:307-313.

Colinet JF, Spencer ER, Jankowski RA [1997]. Status of dust control technology on U.S. long-walls. In: Ramani RV, ed. Proceedings of the Sixth International Mine Ventilation Congress. Littleton, CO: Society for Mining, Metallurgy, and Exploration, Inc., pp. 345-351.

Haney RA, Ondrey RS, Fields KG [1993]. Influence of airflow and production on longwall dust control. In: Proceedings of the Sixth U.S. Mine Ventilation Symposium (Salt Lake City, UT, June 21-23). Littleton, CO: Society for Mining, Metallurgy, and Exploration, Inc.

Henke B, Thiemann M [1991]. Dust suppression during mining with self-advancing supports. Silicosis Report North-Rhine Westfalia, Vol. 18, Der Minister fur Wirtschaft, Mittelstand und Technologie des Landes Nordrhein-Westfalen, Germany.

Jankowski RA, Babbitt CA [1986]. Using barriers to reduce dust exposure of longwall face workers. Pittsburgh, PA: U.S. Department of the Interior, Bureau of Mines, RI 9037. NTIS No. 87 139572.

Jankowski RA, Hake J [1989]. Dust sources and controls for high production longwall faces. In: Proceedings of Longwall USA (Pittsburgh, PA), pp. 117-132.

Jankowski RA, Daniel JH, Kissell FN [1987]. Longwall dust control: an overview of progress in recent years. In: Proceedings of the 22nd International Conference of Safety in Mines Research Institutes (Beijing, China, Nov. 2-6, 1987), pp. 737-747.

Jankowski RA, Jayaraman NI, Potts JD [1993]. Update on ventilation for longwall mine dust control. Pittsburgh, PA: U.S. Department of the Interior, Bureau of Mines, IC 9366. NTIS No. PB94-112190.

Jankowski RA, Whitehead KL, Thomas DJ, Williamson DL [1989]. High-pressure inward-facing drum sprays reduce dust levels on longwall mining sections. In: Proceedings of Longwall USA (Pittsburgh, PA), pp. 231-242.

Jayaraman NI, Jankowski RA, Kissell FN [1985]. Improved shearer-clearer system for double drum shearers on longwall faces. Pittsburgh, PA: U.S. Department of the Interior, Bureau of Mines, RI 8963. NTIS No. PB86-107844.

Jayaraman NI, Jankowski RA, Organiscak JA [1992]. Update on stageloader dust control in longwall operations. In: Proceedings of Longwall USA (Pittsburgh, PA).

Kelly JS, Jankowski RA [1984]. Evaluation of homotropal ventilation for longwall dust control. In: Proceedings of the Coal Mine Dust Conference (Morgantown, WV, Oct. 8-10), pp. 92-100.

Kelly J, Ruggieri S [1990a]. Evaluate fundamental approaches to longwall dust control: Subprogram A – Passive barriers/spray air movers for dust control. Waltham, MA: Foster-Miller, Inc. U.S. Bureau of Mines contract No. J0318097. NTIS No. DE 90-015511.

Kelly J, Ruggieri S [1990b]. Evaluate fundamental approaches to longwall dust control: Subprogram C – Stageloader dust control. Waltham, MA: Foster-Miller, Inc. U.S. Bureau of Mines contract No. J0318097. NTIS No. DE 90-015510.

Kok EG, Adam RFJ [1986]. Research on water proportioning for dust control on longwalls. Ketron, Inc. U.S. Bureau of Mines contract No. J0318096.

Kost JA, Colinet JF, Shirey GA [1985]. Refinement and evaluation of basic longwall dust control techniques. BCR National Laboratory. U.S. Bureau of Mines contract No. J0318093.

Lama RD, Liu Y [1992]. Control of respirable dust on longwall faces. In: Proceedings of the Fifth International Mine Ventilation Congress (Johannesburg, Republic of South Africa, Oct. 25-30).

Laurito AW, Singh MM [1987]. Evaluation of air sprays and unique foam application methods for longwall dust control. Engineers International, Inc. U.S. Bureau of Mines contract No. J0318095. NTIS No. PB89-189922.

Listak JM, Chekan GJ, Colinet JF [2001]. Laboratory evaluation of shield dust entrainment in high-velocity airstreams. Transactions SME, Vol. 310. Littleton, CO: Society for Mining, Metallurgy, and Exploration, Inc., pp. 155-160.

Mangolds A, Rajan S, Ruggieri S [1990]. Evaluate fundamental approaches to longwall dust control: Subprogram G – Reduction of shield-generated dust. Waltham, MA: Foster-Miller, Inc. U.S. Bureau of Mines contract No. J0318097. NTIS No. DE 90-015496.

McClelland JJ, Organiscak JA, Jankowski RA, Pothini BR [1987]. Water infusion for coal mine dust control: three case studies. Pittsburgh, PA: U.S. Department of the Interior, Bureau of Mines, RI 9096. NTIS No. 88-120514.

Ondrey RS, Haney RA, Tomb TF [1994]. Summary of minimum dust control parameters. In: Proceedings of the Fourth Symposium on Respirable Dust in the Mineral Industries (Pittsburgh, PA, Nov. 8-10, 1994).

Organiscak JA [1999]. Investigation of longwall face ventilation air splitting methods for improved dust control. Transactions SME, Vol. 306. Littleton, CO: Society for Mining, Metallurgy, and Exploration, Inc., pp. 86-94.

Organiscak JA, Colinet JF [1999]. Influence of coal properties and dust control parameters on longwall respirable dust levels. Min Eng *51*(9):41-48.

Organiscak JA, Leon MH [1993]. Translucent face partition for longwall dust control. Proceedings of the Sixth U.S. Mine Ventilation Symposium (Salt Lake City, UT, June 21-23). Littleton, CO: Society for Mining, Metallurgy, and Exploration, Inc.

Organiscak JA, Jankowski RA, Kelly JS [1986]. Dust controls to improve quality of longwall intake air. Pittsburgh, PA: U.S. Department of the Interior, Bureau of Mines, IC 9114. NTIS No. PB 87-167573.

Organiscak JA, Khair AW, Ahmad M [1996a]. Studies of bit wear and respirable dust generation. Transactions SME, Vol. 298. Littleton, CO: Society for Mining, Metallurgy, and Exploration, Inc., pp. 1874-1879.

Organiscak JA, Listak JM, Jankowski RA [1985]. Factors affecting respirable dust generation from longwall roof supports. Pittsburgh, PA: U.S. Department of the Interior, Bureau of Mines, IC 9019. NTIS No. PB85-236453.

Organiscak JA, Mark C, Jankowski RA, Thimons ED [1996b]. Health and safety implications of semiautonomous longwall operations. In: Proceedings of Longwall USA (Pittsburgh, PA), pp. 1-13.

Pimentel RA, Adam RFJ, Jankowski RA [1984]. Improving dust control on longwall shearers. In: Proceedings of the SME-AIME Annual Meeting (Los Angeles, CA, Feb. 26-Mar. 2), pp. 63-82.

Ruggieri SK, Babbitt C [1983]. Optimizing water sprays for dust control on longwall shearer faces: design and installation manual. Waltham, MA: Foster-Miller, Inc. U.S. Bureau of Mines contract No. J0308019. NTIS No. PB 86-205416.

Ruggieri SK, Muldoon TL, Schroeder W, Babbitt C, Rajan S [1983]. Optimizing water sprays for dust control on longwall shearer faces. Waltham, MA: Foster-Miller, Inc. U.S. Bureau of Mines contract No. J0308019. NTIS No. PB 86-205408.

Shirey CA, Colinet JF, Kost JA [1985]. Dust control handbook for longwall mining operations. BCR National Laboratory. U.S. Bureau of Mines contract No. J0348000. NTIS No. PB-86-178159/AS.

Srikanth R, Suboleski SC, Miola W, Ramani RV [1995]. Contribution of shield movement to airborne dust levels in longwall faces. Min Eng *Jun*:570-574.
Stevenson JW [1985]. An operator's experience using antitropal and homotropal longwall face ventilation systems. In: Proceedings of the Second Mine Ventilation Symposium (Reno, NV).

Stricklin JH [1987]. Longwall dust control at Jim Walter Resources. In: Proceedings of the Third Mine Ventilation Symposium (University Park, PA).

U.S. Bureau of Mines [1984]. Technology news 203: How to reduce shearer operators dust exposure by using remote control. Pittsburgh, PA: U.S. Department of the Interior, Bureau of Mines.

U.S. Bureau of Mines [1989]. Technology news 326: Novel foam application lowers longwall dust. Pittsburgh, PA: U.S. Department of the Interior, Bureau of Mines.

CHAPTER 4.—DUST CONTROL IN STONE MINES

By Fred N. Kissell, Ph.D.,[46] and Gregory J. Chekan[47]

In This Chapter

- ✓ Drilling, blasting, and crushers
- ✓ Diesel particulate
- ✓ Enclosed cabs
- ✓ Ventilation with jet fans
- ✓ Stopping construction methods
- ✓ Propeller fans as main fans

This chapter explains how to control dust in large-entry stone mines, including both silica dust and diesel particulate. Most stone mines are limestone mines, but a substantial minority are marble, sandstone, and granite mines. These mines differ from most others in that entry widths are 30 ft or more and entry heights are 25 ft or more. Such mines, developed with room-and-pillar methods, have large open areas that can make ventilation and dust control more difficult.

Because of the difficulty of ventilating stone mines, improved ventilation is a major focal point of this chapter. However, the chapter also covers the control of dust from drills, blasting, and crushers. Another part of the chapter covers enclosed cabs, an effective dust control technique for some workers.

BACKGROUND

The major dust compliance problem in stone mines is caused by silica (quartz) in the rock. Mines in high-silica rock, 8% or more, are far more likely to have a dust problem than those where there is less silica. Geographically, the limestone in the Northeastern and South Central United States has higher silica than the rest of the country.

Chekan and Colinet [2002] have analyzed Mine Safety and Health Administration (MSHA) dust sampling results [MSHA 2001] from the stone industry. They have concluded that, on average across the United States, the workers exposed to the highest dust concentrations are rotary drill operators, front-end loader operators, truck drivers, and crusher operators. However, there are many regional differences. Also, occupations that work outside of cabs, such as blasters, roof bolters, and laborers, can be exposed to high dust levels.

---

[46]Research physical scientist.
[47]Mining engineer.
Pittsburgh Research Laboratory, National Institute for Occupational Safety and Health, Pittsburgh, PA.

CONTROL OF DUST FROM DRILLS, BLASTING, AND CRUSHERS

Drills, blasting, and crushers produce the most dust in stone mines. Drill dust can usually be controlled by proper maintenance of the water supply system. Blasting dust is controlled by firing off-shift. Crusher dust, a more difficult problem, is usually managed (with varying success) by ventilation and water sprays.

Control of drill dust. Drill dust is suppressed by water injected through the drill steel, a common practice for many years [ILO 1965]. Usually, respirable dust is reduced by 95% or better [MSA Research Corp. 1974]. However, this does not prevent dust from entering the air during the initial collaring period as the drill hole is started. Various means have been tried to prevent the escape of dust during collaring. These range from simple handheld sprays to elaborate types of suction traps around the end of the drill steel. None of these are very efficient.

Drills powered by compressed air are much less common than in the past, eliminating the dust problems associated with their use. For example, if some of the compressed air operating the drill leaks into the front head of the drill and escapes down the drill steel, it will cause dry drilling and carry dust out of the hole. Compressed air escaping through the front head release ports will atomize some of the water in the front head. This atomized water evaporates rapidly and, if the water is dirty, many dust particles will remain in the air [Sandys and Quilliam 1982].

MSA Research Corp. [1974] has listed the factors that can lead to high dust levels on drills. Many result from lack of proper maintenance. These are failure to use water, inadequate quantities of water, plugged water holes in the drill bit, dull drill bits, and dry collaring.

Control of blasting dust. Control of blasting dust is described in more detail in chapter 6, the chapter on hard-rock mines. Water is used to spray the blast area beforehand. Ventilation is used to exhaust fumes and dust via an untraveled return and between shifts. In most cases, the faces are shot during an off-shift, so no workers are in the mine at the time of the blasts. Studies have shown [Chekan and Colinet 2002] that in stone mines the retention time of the dust is usually less than 2 hr. If ambient levels of silica dust are high after this period or if workers are exposed to an excessive amount of dust from blasting when they reenter the mine, it usually indicates that the ventilation needs to be improved.

Control of dust from crushers. Dust from crushers is controlled by water sprays and local exhaust ventilation from the crusher enclosure. The amount of water needed to do the job is hard to specify. It depends on the type of material crushed and the degree to which water will cause downstream handling problems. If the rock is dry, a starting point is to add a water quantity equivalent to 1% of the weight of the material being crushed [Quilliam 1974]. The nozzle

pressure of sprays at the grizzly and crusher jaw should be below 60 psi to avoid stirring the dust cloud and reducing the capture efficiency of the ventilation system.[48]

The amount of air required for dust control depends on how much the crusher can be enclosed. Enough air should be exhausted from a plenum under the crusher to produce a strong indraft at the jaw, grizzly, and any other openings around the crusher. The required airflow is usually large. For example, Rodgers et al. [1978] have described how dust from a 5-ft cone crusher was reduced by using a 75,000-cfm[49] exhaust ventilation system and a control booth for the operators.[50] Yourt [1969] has given a comprehensive set of design principles for dust control at crushing and screening operations.

Crushers need lots of air and lots of water because they break lots of rock.

In stone mines, dust that escapes the crusher is hard to contain because of the large cross-sectional area of the entries. Figure 4-1 shows a conceptual approach to controlling crusher dust in a limestone mine. The crusher is located in a crosscut that has been benched to facilitate dumping from trucks. The crusher operator is located in an enclosed booth that is pressurized with filtered air. The crosscut is divided by a stopping (or leak-tight curtain) that essentially puts the crusher and dump point in a stub heading. Air is exhausted from a plenum under the crusher to create an indraft at the crusher jaws. It is then directed through the stopping. Dust in this air can be removed with a baghouse or directed into the return.

Directing air through the stopping creates an inward air movement in the travelway. Because of this inward air movement, dust that escapes the crusher is more likely to stay confined within the stub heading and not escape into the rest of the mine. If the air velocity in the travelway is not high enough to confine the dust, a “half-curtain” approach might be helpful. Installing a half-curtain in the travelway reduces the cross-sectional area and raises the air velocity. The higher air velocity provides better dust confinement.[51]

The arrangement shown in figure 4-1 has the air doing double duty. It first confines dust in the crusher, then in the travelway. Whether all of this is necessary will depend on the circumstances in each individual mine. An enclosed operator booth alone may be adequate. However, it is

---

[48]Chapter 1, the dust control methods chapter, has a more comprehensive discussion on why high spray pressures should be avoided most of the time.

[49]Large air quantities may be required because falling rock induces its own airflow. Pring [1940] investigated the amount of air required to produce an indraft in surge bins at crusher installations. About 35,000 cfm was required at a large crusher installation.

[50]If large (80% or more) dust reductions are sought for workers near a crusher, the most practical way to achieve this is to provide an enclosed and pressurized control booth supplied with filtered air.

[51]The half-curtain is described more fully in chapter 2 on continuous miner dust control and chapter 1 on dust control methods.

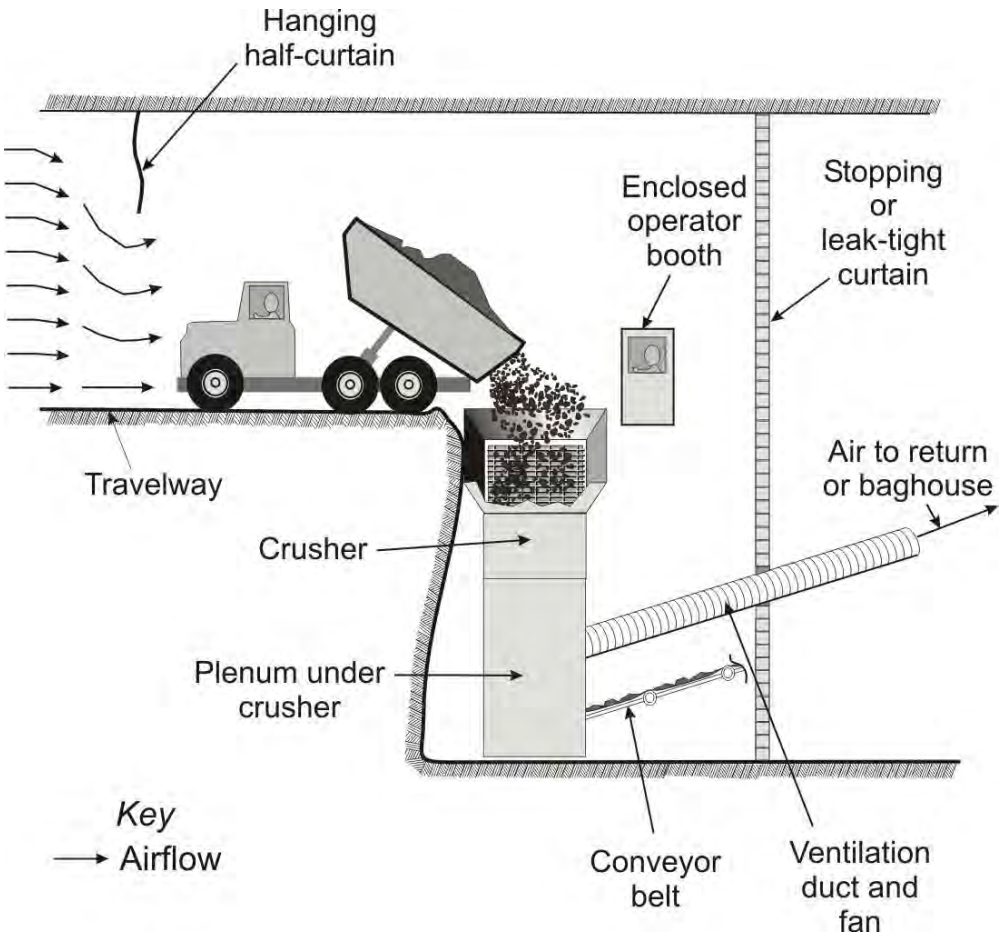

Figure 4-1.—Conceptual approach to controlling crusher dust in a stone mine.

hard to reliably get better than a 90% dust reduction in such booths under real mining conditions, so additional measures to reduce dust may be required.

CONTROL OF DIESEL PARTICULATE

Diesel particulate control is included in this chapter because new MSHA diesel rules may require upgrades to stone mine ventilation systems and diesel equipment. A detailed but readable review of diesel particulate controls has been written by Schakenberg and Bugarski [2002]. Essentially, the technology selected depends on how much the particulate must be reduced. Moderate particulate reductions may be obtained by better engine maintenance, engine derating, biodiesel fuel, fuel-water emulsions, and oxidation catalysts in conjunction with low-sulfur fuels. Large particulate reductions (80% or better) can be obtained with ceramic particulate filters on the engine tailpipe. Also, new low-emissions engines are available. These new engines can lower the particulate level as much as 75% if the existing engine has an old design.

Some reduction in diesel particulate levels can be achieved by running haulage trucks in return airways. However, since other equipment in the mine is also powered with diesel engines, the benefits of return haulage may be minimal. In many mines, the haulage truck horsepower is only a fraction of the installed diesel horsepower in the mine.

Reduction in diesel particulate can be obtained with improvements in the ventilation, as described in later sections on jet fans and stoppings. Head [2001a,b,c] recently wrote three helpful articles on better ventilation and reducing diesel emissions in stone mines.

USING ENCLOSED CABS TO CONTROL SILICA DUST AND DIESEL PARTICULATE

Cabs can reduce dust *if* their dust control systems are properly designed and maintained. Don't expect a dust reduction over 75%, though. There is more information on enclosed cabs in chapter 5, the surface mining chapter.

A high proportion of stone mine workers exposed to high dust levels can be protected with enclosed cabs or control booths. Haulage trucks in stone mines are often equipped with cabs. These cabs, if properly designed and maintained, can greatly lower the dust exposure of the truck drivers.

Impact of retrofitting. Chekan and Colinet [2002] recently measured the efficiency of an enclosed cab on a 27-year-old haulage truck in a limestone mine. In this study, the cab was originally equipped with a heating and air-conditioning unit that did not filter the intake air or pressurize the cab. Dust level measurements showed that its overall efficiency in reducing respirable silica dust was only 33%. The cab was then sealed and retrofitted with a new heating and air-conditioning unit that filtered the air and slightly[52] pressurized the cab. A new set of dust measurements gave an overall efficiency of 75% for respirable silica dust. This 75% overall efficiency figure was in line with dust efficiency results obtained with newer trucks.[53]

Cab filtration systems. Cab filtration systems can also trap diesel particulate if they are designed with this goal in mind. In underground stone mines, the level of diesel particulate is usually much higher than that found at surface mines, so the filtration of diesel particulate becomes an important consideration. Diesel particulate is much smaller in size than respirable mineral dusts, such as silica dust. So, if this diesel particulate is to be trapped by the cab filtration system, the filter must be much finer than that normally used to trap respirable dust. These

[52]To a pressure of 0.01 in w.g.

[53]These figures represent the overall cab efficiency, which is calculated from the inside and outside dust concentration values. Usually the filters have much higher efficiency values. However, leakage of dust into the cab and dust sources in the cab (such as dirty boots) cause the overall efficiency to be lower.

finer filters, usually designated as HEPA filters, have a higher pressure drop and require a more powerful fan.[54] They also require more frequent cleaning or replacement.

Efficiency to expect. When considering the use of cabs, it is important to recognize that the 75% efficiency figure cited above is a typical efficiency value for a relatively new cab with an average level of maintenance. Higher efficiency values can be obtained, but they are the exception rather than the rule. A sustained efficiency over 75% is hard to achieve under realistic underground mining conditions. The main reasons for this include poor or aging seals on the cab, the operator opening the cab door for work-related tasks, and the operator bringing dirt into the cab without performing a regular cleaning of the interior.

FACE AREA VENTILATION WITH JET FANS

Jet fans can aid stone mine ventilation if these guidelines for their use are closely followed.

A jet fan is a freestanding fan designed to induce additional air movement through a mine airway. Typically, no ductwork is attached to the fan, and the high-velocity[55] exhaust jet from the fan entrains additional air from around the fan and pushes it forward. Usually jet fans do not outperform those fans with attached ductwork. However, for ductwork to be effective it must be extended close to the working face where it is subject to blast damage. Jet fans are located farther away and can always be temporarily moved around a corner to avoid the direct path of a blast.

Jet fans have two applications. They are used to ventilate a straight single heading provided it is not too long, and they are used to ventilate a portion of the mine a few crosscuts away from the main pathway of fresh air. Jet fans cannot be used to ventilate an entire mine or even to move air more than a few crosscuts.

Jet fan ventilation of single headings. Figure 4-2 shows a jet fan placed to ventilate a straight single heading. It is placed at the entrance of the heading on the intake air side. It must be close to the rib, pointed straight ahead, and with the inlet extended slightly into the crosscut. Performance inevitably suffers when other locations are used. Keeping the fan within a foot or two of the rib ensures that the jet expands only on one side, increasing its penetration. Extending the inlet into the crosscut reduces recirculation.

Several studies have measured the performance of vane-axial fans at single headings like that shown in figure 4-2. Matta et al. [1978] used a 20,000-cfm fan to ventilate a heading 28 ft wide by 165 ft long. The height ranged from 17 ft at the crosscut to 9 ft at the face. Tracer gas tests

[54] MSHA recommends that HEPA filters always be used.
[55] 4,000 to 9,000 ft/min or more.

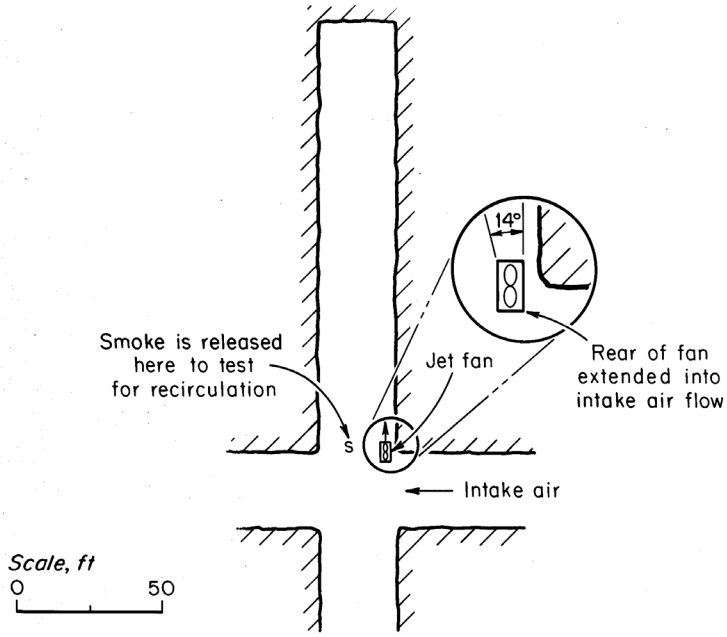

Figure 4-2.—Jet fan ventilating a single straight heading.

showed that 5,000 cfm of fresh air was reaching the face at 150 ft. A smaller 12,000-cfm fan with a 3-ft outlet nozzle pushed 6,000 cfm of fresh air to the face, and a 10,000-cfm compressed air-powered venturi air mover gave 3,500 cfm of fresh air to the face. The airflow in the crosscut was 57,000 cfm.

Matta et al. got better results when the fan had a nozzle attached. Lewtas [1980] obtained similar findings. Lewtas achieved the best air jet penetration when the nozzle was a truncated cone attached to a 1-ft-long straight section at the outlet. The sides of the cone were sloped at 18º from the axis; the ratio of the outlet diameter to the fan diameter was 0.68.

Brechtel et al. [1985] tested a jet fan in a larger heading, 55 ft wide by 30 ft high by 320 ft long. An 88,000-cfm jet fan was surprisingly effective, with 66,000 cfm of fresh air reaching the face, according to the tracer gas dilution tests. Airflow in the crosscut was 124,000 cfm.

Dunn et al. [1983a] tested jet fans in two different sizes of headings. Both were wide relative to their depth, probably the main factor leading to the high ventilation efficiencies. For example, in a heading of medium cross-section, 45 ft wide by 21 ft high by 115 ft long, a 7,000-cfm fan inclined up at 10º forced 6,700 cfm of fresh air to the face. There was 14,000 cfm in the cross-cut. In another heading with a large cross-section, 52 ft wide by 38 ft high by 150 ft long, a 14,000-cfm jet fan inclined upwards at 12º forced all of the 14,000 of fresh air to the face. The baseline ventilation with no fan was 4,500 cfm. A larger fan performed no better because only 15,000 cfm of fresh air was available in the crosscut.

Table 4-1 shows the results of all of the large-entry tests. The face ventilation effectiveness is the fresh air delivered to the face divided by the fan quantity, expressed as a percentage.

Table 4-1.—Results of jet fan studies

Researcher	Cross-sectional area, ft^2	Length, ft	Area-to-length ratio	Fan size, cfm	Face ventilation effective-ness, %
Matta et al. [1978]	476-252	165	~2:1	20,000	30
Matta et al. [1978]	476-252	165	~2:1	12,000 with nozzle	50
Matta et al. [1978]	476-252	165	~2:1	10,000, venturi	35
Brechtel et al. [1985]	1,650	320	5:1	88,000	75
Dunn et al. [1983a]	945	115	8:1	7,000, up 10º	96
Dunn et al. [1983a]	1,976	150	13:1	14,000, up 12º	100

Overall, these results show that jet fans can work reasonably well in a dead heading if the heading is large enough, the fan is properly located, and enough fresh air is provided to the fan inlet. The best results were obtained when the heading area to length ratio was high. A nozzle should be used to improve the jet penetration. Also, it may help to angle the fan upwards by 10º, per the findings by Dunn et al. [1983a].

Jet fans in headings should always be tested for recirculation by releasing smoke at location S in figure 4-2 and observing whether any travels back to the fan inlet. If recirculation to the fan inlet is present, it may help to attach a short length of ventilation duct to the inlet and then extend the other end of the duct upwind in the crosscut.

Jet fan ventilation of multiple headings a few crosscuts away from fresh air pathway. Jet fans have great potential for moving air short distances. However, ensuring an adequate quantity of fresh air can be difficult. Figure 4-3 shows a jet fan placed in the center of an airway and indicates how the air jet spreads as it moves away from the fan. This jet spreading results from the entrainment of the air next to the jet, and the amount of air entrained can be surprisingly high—

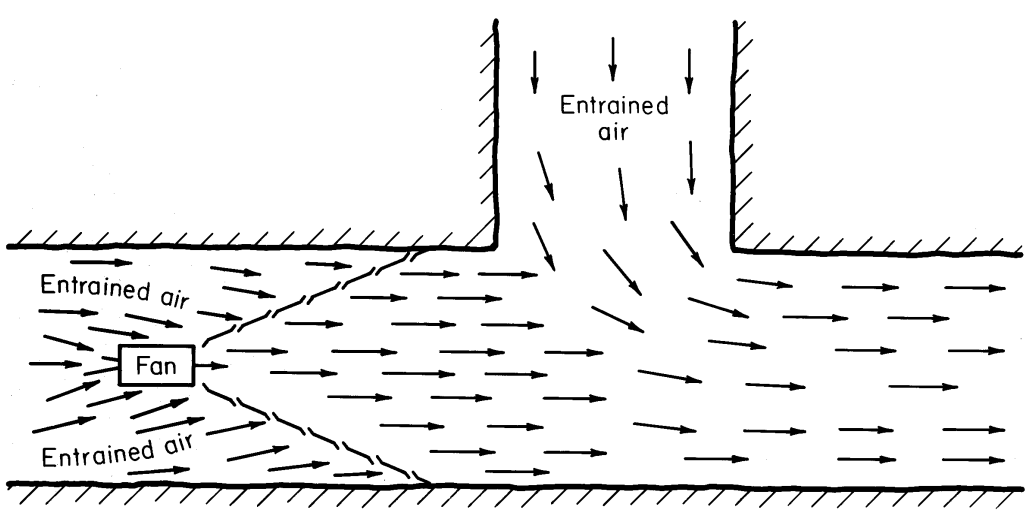

Figure 4-3.—Jet fan entrainment of mine air.

9 to 15 times the air quantity passing through the fan [Dunn et al. 1983b]. Air can also be entrained from crosscuts ahead of the fan, as shown in figure 4-3. Unfortunately, much of the entrained air is contaminated air that is recirculated back from the face, not fresh air.

Fresh air and recirculation. The challenge when using jet fan ventilation is how to place the fan to maximize the amount of fresh air. Having some recirculated air is not necessarily a problem. Studies have shown that recirculated air becomes a problem only when it is substituted for fresh air rather than added to a fixed quantity of fresh air [Kissell and Bielicki 1975].

As an example of how recirculated air can substitute for fresh air, figure 4-4 shows a portion of a mine a few crosscuts away from a fresh air pathway. Without a jet fan in operation, the mine air circulation in this part of the mine was directly from location 1 to location 2. A 14,000-cfm jet fan was placed close to a pillar at location A and directed toward the face area [Dunn et al. 1983a]. In this location, the fan worked well since the air movement it generated brought an average of 10,000 cfm of fresh air to faces FA through FD. Location B, close to the opposite side of the pillar, was almost as effective in relation to fan placement.

Experimenting with other locations, when the fan was placed at either of the two locations close to the adjacent pillar, marked X and Y, fresh air delivery was cut by 40% and 80%, respectively. Even though the distance from A and B is less than 100 ft, X and Y are too far from the intake air source, permitting recirculated air to return on both sides of the fan and diminish the fresh air. However, for fan locations A and B, the recirculated air returns only on one side, the left side, since the rib on the right side serves as a natural barrier. Figure 4-5 shows the airflows obtained with the jet fan in operation at location A. The airflow directions show that all of the fresh air was being directed toward the working faces, even though there was also a large amount of recirculated air.

Important conclusions from this work done by Dunn et al. were that fans must be placed in the incoming fresh airflow. In the larger airways, it helped to angle the fan upwards by 10º. Also, under this work it was concluded that larger-capacity fans ventilate more effectively if enough intake fresh air is available.

If you want to move air for distances greater than those shown in figure 4-5, forget about jet fans. Use ventilation ductwork or build stoppings.

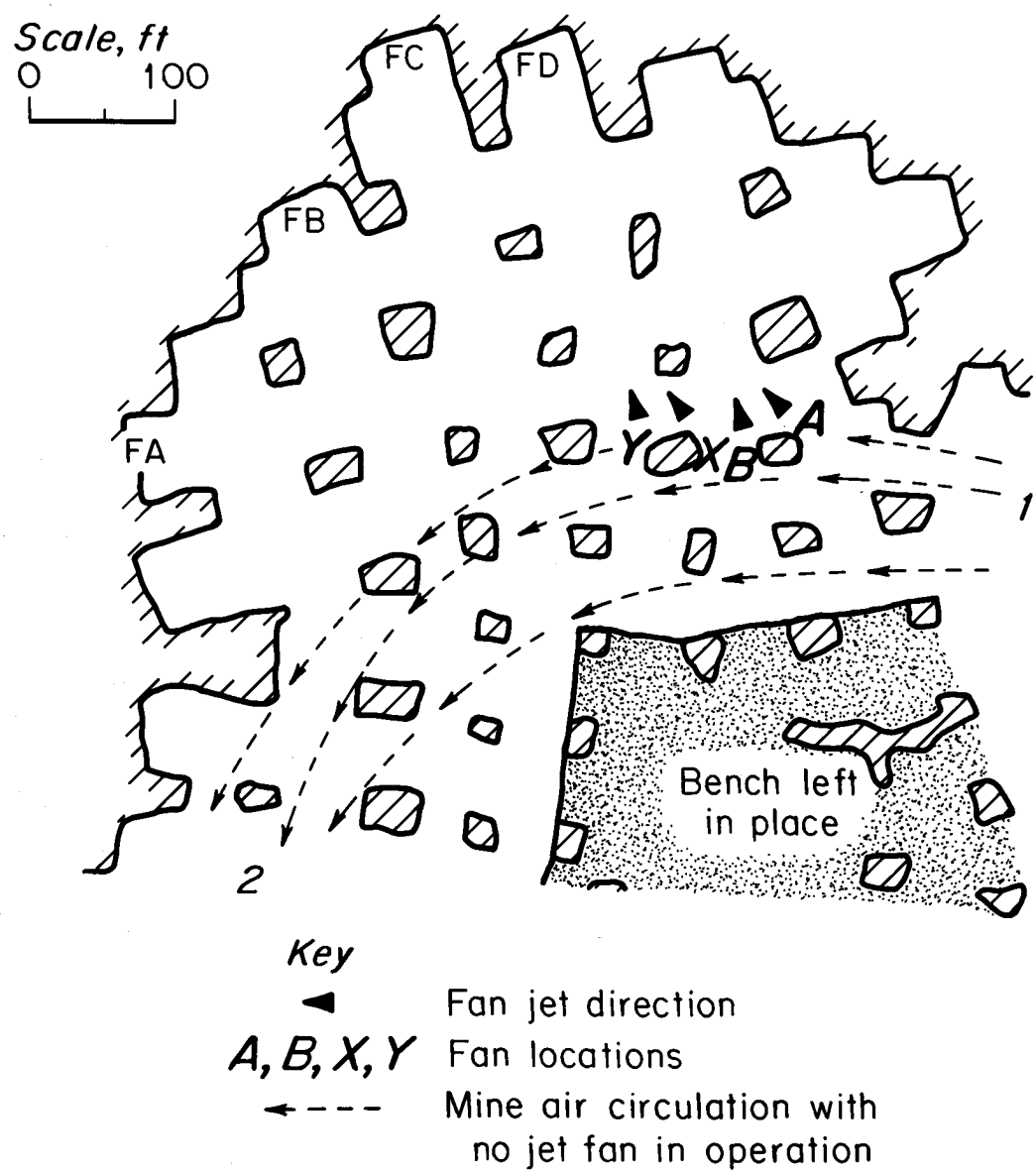

Figure 4-4.—Multiple headings a few crosscuts away from a fresh air pathway.

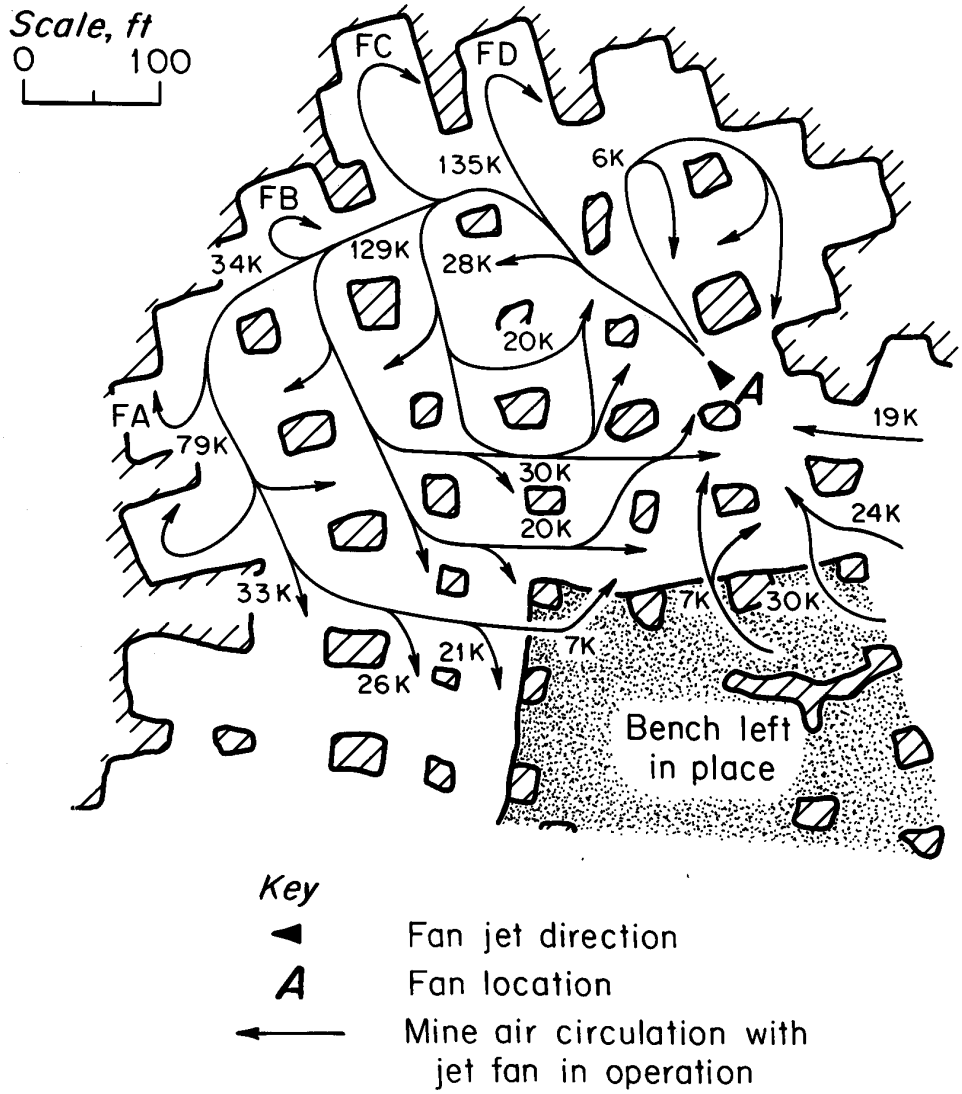

Figure 4-5.—Airflows obtained with jet fan in operation.

METHODS OF STOPPING CONSTRUCTION

In mines with large entries, stopping construction is a major task. Fortunately, some innovative stopping designs are available.

Well-built low-leakage stoppings are essential for good mine ventilation. Adam et al. [1986] have experimented with alternative stopping designs for large mine openings. The work was undertaken to develop construction techniques and cost data and to measure leakage rates on full-scale structures in an oil shale mine where the entries were 30 ft high by 55 ft wide. Six full-size stoppings and one overcast were built. Leakage was measured before and after a full-scale face blast. The lessons learned are applicable to today's stone mines.

Muckpile stoppings. Muckpile stoppings elicited the most interest from mine operators. These were simply piles of waste material stacked in crosscuts. However, the air leakage from this type of stopping was far too high, possibly because there were not many fines in the waste. Adam et al.'s recommendation for achieving less leakage was to use a "pipe and sheeting" stopping in main entries and a "brattice and wire-mesh" stopping in individual panels.

Pipe and sheeting stoppings. The pipe and sheeting stopping is formed on 5- and 6-inch telescoping, 1/4-inch wall, square-section steel tubes. These tubes were set into shallow holes that had been drilled into the floor on 7.5-ft centers. At the roof, directly above each floor hole, an 8-in-long, 3-in by 3-in by 3/8-in piece of angle iron was attached using a 2-ft resin roof bolt. The top of each telescoping member was welded to a roof angle. The connection between the two tubes was also welded. Corrugated metal sheets were then fastened to the vertical support members on the high-pressure side using self-drilling screws. All sheeting seams and the stopping perimeter were then sealed with a polyurethane foam.

Brattice and wire mesh stopping. To build a brattice and wire-mesh stopping, short pieces of threaded rod, 1/2-inch in diameter by 4 inches long, were first welded every 2 ft to a section of angle iron 4 inches by 4 inches by 1/4 inch by 10 ft long. This angle iron was then bolted to the roof and floor using 2-ft resin bolts on 3-ft centers. Next, a wire fencing layer was placed across the opening, and each panel of fence was attached to the angle base on the roof and floor. Then, brattice with velcro strips sewn down the vertical edges were attached to the angle bars on the high-pressure side. The velcro seams were then fastened to create a sealed wall of brattice. Following the brattice installation, a second layer of wire fence was attached across the drift in a fashion similar to the first. The two layers of fence sandwiching the brattice were then securely fastened to the threaded rod with roof bolt plates, washers, and nuts. Finally, all velcro seams and the stopping perimeter were sealed with polyethylene foam.

Blast relief with damage-resistant brattice. Close to the face, some blast relief is needed. A stopping of "damage-resistant brattice" (figure 4-6) can be used [Thimons et al. 1978]. Damage-resistant brattice consists of vertical brattice panels joined by velcro seals. To form a

stopping of damage-resistant brattice, a strip of velcro is sewn to each edge of a roll of brattice cloth on the same side of the fabric. The end of the roll is wrapped around a wooden 2 by 4 that is slightly shorter than the width of the roll. The 2 by 4 is then bolted to the roof, with the brattice hung down to the floor. The operation is repeated to extend a curtain all the way across the entry. Adjacent cloth panels are sealed to each other with the velcro. The velcro strips are sewn to the same side of adjacent panels so that they separate by peeling rather than shearing. Next, other wood 2 by 4s are bolted to the ribs. Velcro is then stapled on and the adjacent brattice curtain attached. Blast forces can split the seams between the panels and at the ribs, but they can easily be reattached. When blast forces are no longer a concern at that location, adjacent panels can be stapled together. Also, wire mesh can be placed on either side to make a more pressure-resistant brattice and wire-mesh stopping.

Table 4-2 shows the leakage and cost of the three types of stoppings, along with two types of muckpile stoppings. With the exception of the muckpile stoppings, the leakage values were reasonable. However, the costs were high because there were such large entries to be sealed.

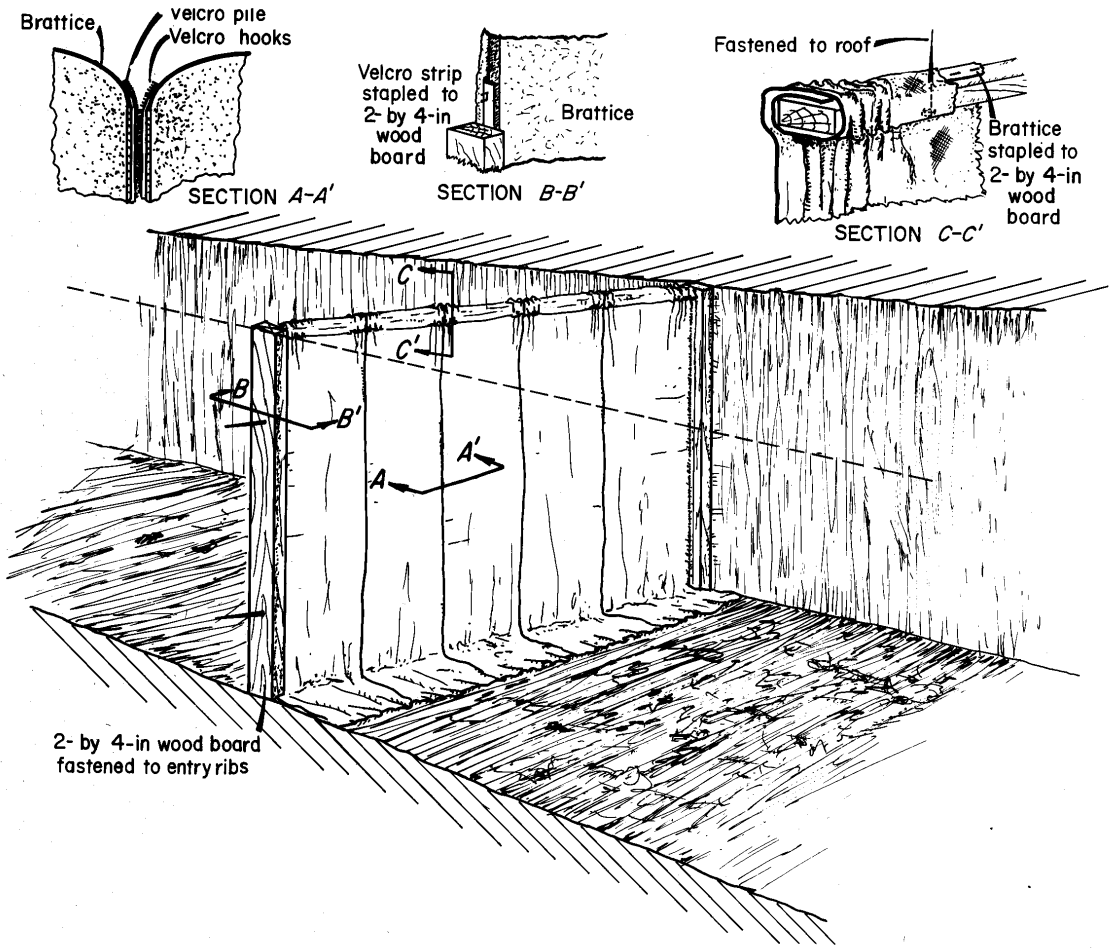

Figure 4-6.—Stopping built from damage-resistant brattice.

Table 4-2.—Cost and leakage of five types of stone mine stoppings

Type of stopping	Cost (2001 prices)	Leakage in cfm/1,000 ft^2 at 0.10 in w.g.
Pipe and sheeting	$15,000	80
Brattice and wire-mesh	$7,000	160
Damage-resistant brattice	$2,400	200 (before blast)
Muckpile stopping	$5,800	5,100
Muckpile and brattice stopping	$2,400	2,200

Because of the high stopping costs, Adam et al. [1986] also considered a wide variety of alternatives in the room-and-pillar layout to reduce the number and size of stoppings required. Typical alternatives were longer pillars along a stopping line, development of bleeder entries, ventilation from adjacent panels, and reduced-width "hourglass" crosscuts that were widened on the retreat benching operation. These alternatives were then weighed in a cost-efficiency model that considered the volume mined per unit stopping area, haulage distance, and equipment tram distance. Adam et al. concluded that stopping size and cost could be reduced by any of several cost-effective alternatives.

PROPELLER FANS AS MAIN FANS

Save money by using propeller fans.

Improved dust control in many stone mines will require installing new main fans. Many stone mines have access exclusively through parallel drift entries, that is, they have no shafts or slopes. Because the pressure drop associated with moving air through large entries is low, these mines may be able use low-pressure, high-volume propeller fans as main fans. Grau et al. [2002] have measured air quantities and pressure drops in two stone mines having only parallel drift entries and no shafts or slopes. Results are shown in table 4-3.

Table 4-3.—Pressure drop in stone mine airways

Mine	Airway length, ft	Air quantity, cfm	Fan pressure, in w.g.
A	2,400	350,000	0.12
B	7,000	280,000	0.06

These air quantities and fan pressures are well within the reach of large-diameter (10- to 12-ft) propeller fans. Such fans will be much less expensive to purchase and operate as main fans than vane-axial fans delivering the same airflow and pressure.

REFERENCES

Adam ME, Brechtel CE, Agapito JFT [1986]. Improved stopping, door, and overcast construction for oil shale mines. J. F. T. Agapito & Associates, Inc. U.S. Bureau of Mines contract No. J0145020. NTIS No. PB87-174918.

Brechtel CE, Adam ME, Agapito JFT [1985]. Development of effective face ventilation systems for oil shale mining. J. F. T. Agapito & Associates, Inc. U.S. Bureau of Mines contract No. H0134033. NTIS No. PB86-159829.

Chekan GJ, Colinet JF [2002]. Silica dust sources in underground limestone mines. In: Proceedings of the 33rd Annual Institute on Mining Health, Safety and Research (Roanoke, VA, Aug. 11-13, 2002).

Dunn MF, Kendorski FS, Rahim MO, Mukherjee A [1983a]. Testing jet fans in metal/nonmetal mines with large cross-sectional airways. Engineers International, Inc. U.S. Bureau of Mines contract No. J0318015. NTIS No. PB84-196393

Dunn M, Kendorski F, Rahim MO, Volkwein J [1983b]. Auxiliary jet fans and how to get the most out of them for ventilating large room-and-pillar mines. Eng Min J *Dec*:31-34.

Grau RH III, Robertson SB, Mucho TP, Garcia F, Smith AC [2002]. NIOSH ventilation research addressing diesel emissions and other air quality issues in nonmetal mines. SME preprint 02-187. Littleton, CO: Society for Mining, Metallurgy, and Exploration, Inc.

Head HJ [2001a]. Proper ventilation for underground stone mines. Aggregates Manager *Jan*: 20-22.

Head HJ [2001b]. Calculating UG mine ventilation fan requirements. Aggregates Manager *Apr*:17-19.

Head HJ [2001c]. Managing diesel emissions in underground mines. Aggregates Manager *Jun*:17-18.

ILO [1965]. Guide to the prevention and suppression of dust in mining, tunnelling, and quarrying. Geneva, Switzerland: World Health Organization, International Labour Office.

Kissell FN, Bielicki RJ [1975]. Methane buildup hazards caused by dust scrubber recirculation at coal mine working faces: a preliminary estimate. Pittsburgh, PA: U.S. Department of the Interior, Bureau of Mines, RI 8015. NTIS No. PB-240 684/1/XAB.

Lewtas TA [1980]. Assessment of induction fan effectiveness. Foster-Miller Associates, Inc. U.S. Bureau of Mines contract No. J0387223. NTIS No. PB82-2359870.

Matta JE, Thimons ED, Kissell FN [1978]. Jet fan effectiveness as measured with SF_6 tracer gas. Pittsburgh, PA: U.S. Department of the Interior, Bureau of Mines, RI 8310. NTIS No. PB-288 173/8/XAB.

MSA Research Corp. [1974]. Control of respirable dust in noncoal mines and ore processing mills – handbook. U.S. Bureau of Mines contract H0220030. NTIS No. PB 240 646.

MSHA [2001]. Sampling results from 1996 to 2000 from the metal/nonmetal mine inspection data (MNMID). Pittsburgh, PA: U.S. Department of Labor, Mine Safety and Health Administration, Pittsburgh Safety and Health Technology Center, Dust Division.

Pring RF [1940]. Dust control in large-scale ore concentrating operations. American Institute of Mining and Metallurgical Engineers, Technical Publication No. 1225.

Quilliam JH [1974]. Sources and methods of control of dust. In: The ventilation of south African gold mines. Yeoville, Republic of South Africa: The Mine Ventilation Society of South Africa.

Rodgers SJ, Rankin RL, Marshall, MD [1978]. Improved dust control at chutes, dumps, transfer points, and crushers in noncoal mining operations. MSA Research Corp. U.S. Bureau of Mines contract No. H0230027. NTIS No. PB 297-422.

Sandys MPJ, Quilliam JH [1982]. Sources and methods of dust control. In: Environmental Engineering in South African Mines. Yeoville, Republic of South Africa: The Mine Ventilation Society of South Africa.

Schnakenberg GH Jr., Bugarski AD [2002]. Review of technology available to the underground mining industry for control of diesel emissions. Pittsburgh, PA: U.S. Department of Health and Human Services, Public Health Service, Centers for Disease Control and Prevention, National Institute for Occupational Safety and Health, DHHS (NIOSH) Publication No. 2002-154, IC 9462.

Thimons ED, Matta JE, Kissell FN [1978]. Bureau of Mines damage-resistant brattice. Pittsburgh, PA: U.S. Department of the Interior, Bureau of Mines, RI 8270. NTIS No. PB-278-607.

Yourt GR [1969]. Design principles for dust control at mine crushing and screening operations. Can Min J *90*(10):65-70.

CHAPTER 5.—SURFACE MINE DUST CONTROL

By John A. Organiscak,[56] Steven J. Page,[57] Andrew B. Cecala,[1] and Fred N. Kissell, Ph.D.[2]

In This Chapter

- ✓ *Drill dust control: wet and dry*
- ✓ *Enclosed cabs on drills and mobile equipment*
- ✓ *Haul road dust control*

Overburden drilling generates most of the respirable dust that affects workers at surface mines. Both wet and dry methods are available to reduce this drill dust. Overburden removal by mobile excavation equipment such as bulldozers, front-end loaders, and haulage trucks can be dusty, particularly under dry and windy conditions. Tightly enclosed cabs with dust filtration systems can substantially lower the dust exposure of both drill and mobile equipment operators. Haul road dust control can be achieved by water application or chemical application.

DRILL DUST CONTROL

Drill dust is controlled with wet or dry systems. Wet systems can be more efficient, but may freeze in the winter. Dry systems require careful maintenance of the drill deck shroud. An improved deck shroud is shown.

Wet Suppression. Wet drilling systems pump water into the bailing air from a water tank mounted on the drill. The water droplets in the bailing air trap dust particles as they travel up the annular space of the drilled hole, thus controlling dust as the air bails the cuttings from the hole [Page 1991].

In wet drilling systems, typical water flow rates are 0.1 to 2.0 gpm depending on the size and type of drill and the moisture level of the overburden. The drill operator controls the flow using a control valve located in the cab. Some drills are equipped with a flow meter to give the operator a visual sign of the flow rate. Raising the water flow will improve dust capture, but too much water causes operational problems. Because of this, the drill operator must exercise care in finding the best water flow rate.

---

[56]Mining engineer.
[57]Research physical scientist.
Pittsburgh Research Laboratory, National Institute for Occupational Safety and Health, Pittsburgh, PA.

To operate the drill at the best water flow rate, the operator slowly increases the amount of water just to the point where visible dust emissions abate. The visible dust abatement point is easy to identify. Increasing water flow beyond the dust abatement point does not yield much improvement in dust control, but will most likely cause increased tricone bit degradation and possible seizing of the drill stem. If the cuttings look moist, it usually indicates that too much water is being used. This approach to adjusting the water flow can be effective; however, the time delay between adjusting the valve and expulsion of the cuttings from the hole can be several seconds. Finding the proper water flow is not as crucial with drills using drag bits, but the cuttings still should not look moist. Particular care in finding the proper flow setting must be exercised when drilling through alternating dry and wet strata.

Tests show that wet suppression systems can effectively control respirable dust. In testing, control efficiencies for 8-in holes varied widely, from a low of 9.1% at a flow of 0.2 gpm to a high of 96.3% at a flow of 1.2 gpm. The most significant increase in efficiency is usually between 0.2 and 0.6 gpm. Above this, the efficiency levels off. For those drills tested, a flow rate approaching 1.0 gpm began to cause operational problems [Zimmer et al. 1987].

The most obvious drawback to wet system drilling occurs when the outside temperatures drop below freezing. The entire system must then be heated while the drill is in operation; during downtime the system must be drained.

Dry Collection. Dry collection systems require an enclosure around the area where the drill stem enters the ground. This enclosure is constructed by hanging a rubber or cloth shroud from the underside of the drill deck. The enclosure is then ducted to a dust collector, the clean side of which has a fan. The fan creates a negative pressure inside the enclosure, capturing dust as it exits the hole during drilling. The dust is removed in the collector, and clean air is exhausted through the fan.

The dust that escapes dry collection systems has several possible sources: the shroud around the drill deck, the drill stem access hole in the drill deck, the dust collector dump, and the dust collector exhaust. Determining which is the problem is not difficult. The presence of a visible dust cloud is a good sign that respirable dust is present, even though such clouds are mostly larger-sized particles.

The integrity of the drill deck shroud, including how well it seals to the ground, is probably the single most important factor contributing to the effectiveness of a dry collection system. The shrouded volume under the drill deck should be at least 1.8 times the volume of the hole and should be at a negative pressure of at least 0.2 in w.g. The minimum ratio of dust collector air to bailing air flow recommended for most drills with a rectangular shroud is 3:1, with higher ratios desirable. Openings in the shroud lower its capture efficiency. The most common open area is the gap between the bottom of the shroud and the ground. With a ground gap of 6 to 9 inches or less, dust capture will usually be satisfactory for a 3:1 airflow ratio. However, as the ground gap increases, dust capture efficiency decreases, and a considerable amount of dust may escape [Page 1991].

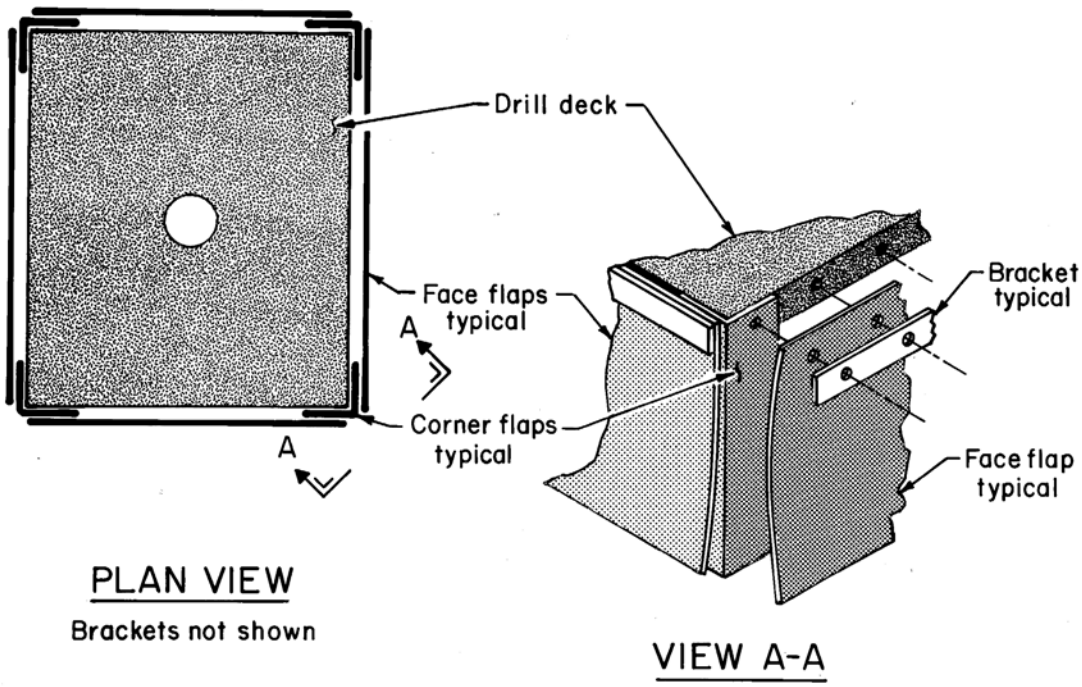

Figure 5-1.—Corner flaps added to a deck shroud to reduce leakage.

During drilling, the miner must be able to observe when the coal seam has been reached and stop drilling. As a result, there are times when a ground gap cannot be avoided. However, it is important for good dust control to keep the gap to a minimum.

The effectiveness of the dust collection system also decreases if significant leaks are present from holes in the shroud. Most deck shrouds are rectangular and constructed from four separate pieces of rubber belting attached to the deck. Thus, leakage occurs at the corner seams as the individual pieces of belting separate from one another. Adding corner flaps to the shroud (figure 5-1) [Page and Organiscak 1995] can help to reduce this corner leakage.

Improved shroud design for dry collection systems. A new type of circular rubber shroud is much superior to the traditional rectangular design because it has no corner seams and it can be easily raised and lowered to make a better seal at the ground [NIOSH 1998] (figure 5-2). The circular shroud is attached to the drill deck with steel banding. A second much thicker steel band is attached to the bottom of the shroud to maintain shape and provide weight. The shroud is raised and lowered through activation of a hydraulic cylinder and lift wires attached to the bottom steel band. The bottom can be raised almost to the drill deck and lowered to make contact with the ground after raising and leveling the drill. Raising and lowering of the shroud is helped by using thin sheet rubber and cutting the rubber so the shroud has a slight conical shape. The shroud also has a small trap door that can be manually opened to shovel the cuttings out of

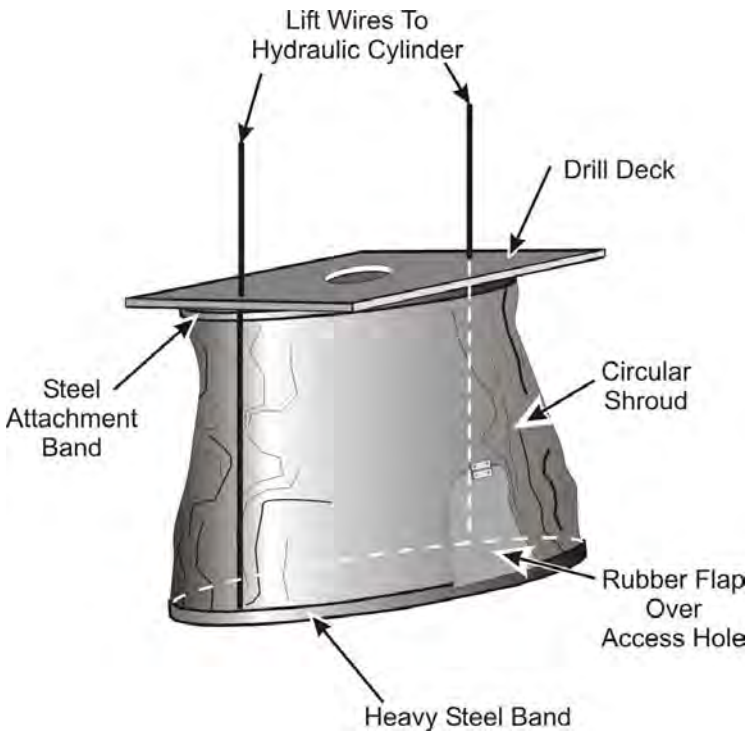

Figure 5-2.—A circular shroud that can be raised and lowered improves dust collection efficiency.

an access hole without having to raise the shroud above the ground and lose dust capture efficiency.

During testing, the circular shroud had a dust reduction efficiency of 99% or better. Comparable tests on the common square shrouds typically achieve 95%, so the amount of dust escaping from the circular shroud is lower by a factor of five.

Maintenance of dry collection systems. A recent field survey of six highwall drills [Organiscak and Page 1999] has shown that proper maintenance is crucial to the performance of dry collection systems. During the survey, the dry dust collection systems on four of the six drills were malfunctioning, and dust levels were very high. The collector fan on one drill was not operating because the drive belts were broken. Another drill had one-quarter of the shroud material missing. The two remaining drills had dust escaping from underneath the shroud due to sloped and uneven ground conditions. When these problems were corrected, dust was reduced by 51% to 88%.

Other maintenance-related dust sources were also identified during this survey. Dust was escaping from torn drill stem seals at the top of the drilling tables. Dust was discharged from a collector's exhaust because the collector filter was torn, and dust was entrained by the wind when the gathered fines in the collector were dumped 4 ft onto the ground. The problems with the drill stem seal and collector discharge were easily fixed by replacing the worn items. Wind entrainment of dust from dumping of the collector was reduced by attaching a cloth shroud to the dust discharge port [Page and Organiscak 1995] and extending it down to within a few inches of ground level.

ENCLOSED CABS ON DRILLS AND MOBILE EQUIPMENT

Enclosed cabs can work well to reduce dust, but high efficiencies require a lot of maintenance. Cab sealing is important.

Dust surveys on drills and bulldozers have shown that enclosed cabs can effectively control the operator's dust exposure. In practice, many enclosed cabs do not provide adequate dust pro-

tection [Organiscak and Page 1999]. The cab protection factors (outside versus inside dust level) measured on rotary drills ranged from 2.5 to 84; those measured on bulldozers ranged from 1 to 45. Newer cabs were usually better sealed and cleaner; older cabs tended to be more poorly sealed and dirtier.

Older cabs can be improved by being retrofitted with systems that heat, cool, and filter the air and by being tightly sealed. Both steps are necessary to ensure good dust control. First, the cab needs to have a high quality of recirculated and incoming filtered airflow. Second, the cab structure must be adequately sealed so that clean make-up air pressurizes the cab, keeping out dust that would otherwise be blown in by the wind.

A recent cab retrofit study by Cecala et al. [2002a,b] showed the importance of cab sealing and pressurization. A poorly sealed cab with no pressurization showed no improvement in dust levels even when retrofitted with a new filtration/air-conditioning system. However, a cab retrofitted with a new filtration/air-conditioning system and pressurized to 0.2-0.4 in w.g. gave a protection factor of 52. Another cab pressurized to 0.01-0.15 in w.g. gave a protection factor of 10. An earlier study by Organiscak et al. [2000] also concluded that cabs must be pressurized to offer adequate protection. Very small one-person cabs need at least 25 cfm of make-up air for adequate pressurization, and larger cabs proportionally more. Also, it was found that pressurization must be continuous and the operator must always keep the doors and windows closed. During the study, the operator of one drill opened the cab door to collar the next hole, letting notable amounts of dust enter the cab. Although the operator then shut the cab door during the drilling operation, the air filtration system took about 7 min to remove the dust cloud.

Since positive pressurization cannot be achieved unless cabs are leak-tight, cabs should be checked regularly for leaks. Doors should be on a single hinge, with intact tight gaskets. Bifold and slider doors leak too much. Flexible boots must be on all control linkages entering the cab and the boot seams sealed with silicone caulking. All other seams and gaps should also be sealed with silicone. A flashlight can be used to check for gaps, and a smoke bomb released inside the cab will reveal even the smallest leaks. Older cabs are often hard to seal properly.

Cecala et al. [2002a,b] also make recommendations on the design and installation of filtration/air-conditioning systems. For effective filtration, the system should have two fans, one to recirculate inside air through a filter and a second to pressurize the cab with outside make-up air passed through a second filter. The filters must be designed to trap small-sized respirable dust. About 75% of the air passing through the cab should be recirculated, thus keeping the air-conditioning unit to a reasonable size. The inlet for the make-up air should be located high on the cab and away from outside dust sources [NIOSH 2001a] to extend filter life and reduce air-conditioner maintenance.

Inside the cab, several actions can be taken to reduce dust. Air outlets should be at the top and inlets at the bottom. This top-to-bottom airflow keeps down the dust originating from dirty work clothes, boots, and a dirty floor. Potential dust sources on the cab floor also need to be relocated or removed. The fans on floor heaters will stir up dust, so these heaters should be moved higher up in the cab [NIOSH 2001b; Cecala et al. 2001]. Cab interiors should also be vacuumed and cleaned regularly to remove the dust that drifts in through open windows or is carried in on the

operator's shoes and clothing. In many instances, a thick layer of sweeping compound on the cab floor will reduce dust [NIOSH 2001c].

HAUL ROAD DUST CONTROL

The best dust control method depends on the type of road aggregate. Spillage is a consideration in selecting the dust control.

Many methods are available for haul road dust control. Water application to the road surface is the most obvious, but there are many others. These include:

- *Salts*—hygroscopic compounds such as calcium chloride, magnesium chloride, hydrated lime, sodium silicates, etc. Salts increase roadway surface moisture by extracting moisture from the atmosphere.

- *Surfactants*—such as soaps and detergents. Surfactants decrease the surface tension of water, which allows the available moisture to wet more particles per unit volume.

- *Soil cements*—compounds that are mixed with the native soils to form a new surface. Examples are calcium or ammonium lignon sulphonate, portland cement, etc.

- *Bitumens*—compounds derived from coal or petroleum such as coherex peneprime, asphalt, oils, etc.

- *Films*—polymers that form discrete tissues, layers, or membranes such as latexes, acrylics, vinyls, fabrics, etc.

- *Soil cements, bitumens, and films*—These form coherent surface layers that seal the road surface, thereby reducing the quantity of dust generated.

Chlorides. Chlorides are the most commonly used products for haul road dust control. A study by Rosbury and Zimmer [1983a,b] showed that the highest control efficiency measured for a chemical dust suppressant, 82%, was for calcium chloride 2 weeks after application. Average efficiencies hovered in the 40% to 60% range over the first 2 weeks after application, then decreased with time. After the fifth week beyond application, the limited data show a control efficiency of less than 20%. The effectiveness of chlorides is enhanced by good roadway preparation, that is, a good crown and good drainage at the shoulder. Also, it is helpful to loosen at least 1-2 inches of the existing roadway surface. This allows the chloride to penetrate evenly into the gravel. To enhance dust control efficiency, the roadway surface should not be compacted before applying chlorides.

It is important that the gravel be kept close to the optimum moisture just before applying chlorides. The product will thus be absorbed much more quickly and evenly into the gravel. Chloride should never be applied to dry gravel in that it will not be evenly absorbed and may show failure in spots. Also, rain on a freshly treated surface will leach out and dilute the chloride, causing it to run off the road. Therefore, application should be postponed if rain is forecast for that day.

Water and chemical suppressants. Untreated plain water is commonly used for roadway dust control. The study by Rosbury and Zimmer [1983a,b] showed that watering once per hour resulted in a control efficiency of about 40%. Doubling the application rate increased the control effectiveness by about 15% to 55%. Chemical dust suppressants (primarily salts and lignons) can be more cost-effective than watering under some conditions. However, all chemical dust suppressants (with infrequent watering) share one common failing compared to frequent watering. Material spillage on roadways is very common, and the material spilled is subject to reentrainment. With frequent watering, newly spilled material is moistened at close intervals. When chemicals are applied with infrequent watering, newly spilled material could go for long periods before being moistened. Therefore, in mines where spillage cannot be controlled, watering alone is better for dust control.

In many instances, chemical suppressants have an advantage over plain water. In locations where trackout from an unpaved road to a paved road creates a dust problem, chemical suppressants are a good choice. Watering actually aggravates the trackout problem with moisture and mud; chemical suppressants, particularly bitumens and adhesives, leave the road dry. Finally, some mines have a dust problem in winter when temperatures are subfreezing but little moisture is present. The case for chemical suppressants over water in such instances is clear.

Road aggregate and dust control. Different types of road aggregate dictate different approaches to dust control. Recommendations based on specific road aggregate are:

1. *Gravel with few fines.* In gravel road surfaces with not enough fines, only watering will be effective. Chemical dust suppressants can neither compact the surface (because of the poor size gradation) nor form a new surface, and water-soluble suppressants will thus leach.

2. *Sand.* In compact sandy soils, bitumens, which are not water-soluble, are the most effective dust suppressant. Water-soluble suppressants such as salts, lignons, and acrylics will leach

from the upper road surface. However, in loose, medium, and fine sands, bearing capacity will not be adequate for the bitumen to maintain a new surface.

3. *Good gradation.* In road surfaces with a good surface gradation, all chemical suppressant types offer potential for equally effective control.

4. *Silt.* In road surfaces with too much silt (greater than about 20% to 25% as determined from a scoop sample, not a vacuum or swept sample), no dust suppression program is effective, and the road should be rebuilt. In high-silt locations, the chemical suppressants can make the road slippery and are not able to compact the surface or maintain a new road surface because of poor bearing capacity. Further, rutting under wet conditions requires that the road be graded, which destroys chemical dust suppressant effectiveness. If the road cannot be rebuilt, watering is the best program.

If there is uncertainty about the gradation of the gravel or if there is doubt about the equipment and products to be applied, the process can be tried on a 500- to 1,000-ft test section of the road. If the process fails at the test section level, then only a small investment and time are lost.

REFERENCES

Cecala AB, Organiscak JA, Heitbrink WA [2001]. Dust underfoot: enclosed cab floor heaters can significantly increase operator's respirable dust exposure. Rock Prod *104*(4):39-44.

Cecala AB, Organiscak JA, Heitbrink WA, Zimmer JA, Fisher T, Gresh RE, et al. [2002a]. Reducing enclosed cab drill operators' respirable dust exposure at surface coal operations with a retrofitted filtration and pressurization system. SME preprint 02-105. Littleton, CO: Society for Mining, Metallurgy, and Exploration, Inc.

Cecala AB, Organiscak JA, Page SJ, Thimons ED [2002b]. Reducing silica exposure in aggregate operations. AggMan *Jan*:24-28.

NIOSH [1998]. Hazard controls: New shroud design controls silica dust from surface mine and construction blast hole drills. Cincinnati, OH: U.S. Department of Health and Human Services, Public Health Service, Centers for Disease Control and Prevention, National Institute for Occupational Safety and Health, HC27, DHHS (NIOSH) Publication No. 98-150.

NIOSH [2001a]. Technology news 485: Improved cab air inlet location reduces dust levels and air filter loading rates. Pittsburgh, PA: U.S. Department of Health and Human Services, Public Health Service, Centers for Disease Control and Prevention, National Institute for Occupational Safety and Health.

NIOSH [2001b]. Technology news 486: Floor heaters can increase operator's dust exposure in enclosed cabs. Pittsburgh, PA: U.S. Department of Health and Human Services, Public Health Service, Centers for Disease Control and Prevention, National Institute for Occupational Safety and Health.

NIOSH [2001c]. Technology news 487: Sweeping compound application reduces dust from soiled floors within enclosed operator cabs. Pittsburgh, PA: U.S. Department of Health and Human Services, Public Health Service, Centers for Disease Control and Prevention, National Institute for Occupational Safety and Health.

Organiscak JA, Page SJ [1999]. Field assessment of control techniques and long-term dust variability for surface coal mine rock drills and bulldozers. Int J Surf Min Reclam Env *13*:165-172.

Organiscak JA, Cecala AB, Heitbrink WA, Thimons ED, Schmitz M, Ahrenholtz E [2000]. Field assessment of retrofitting surface coal mine equipment cabs with air filtration systems. In: Bockosh GR, Karmis M, Langton J, McCarter MK, Rowe B, eds. Proceedings of the 31st Annual Institute of Mining Health, Safety and Research. Blacksburg, VA: Virginia Polytechnic Institute and State University, Department of Mining and Minerals Engineering, pp. 57-68.

Page SJ [1991]. Respirable dust control on overburden drills at surface mines. In: Proceedings of the American Mining Congress Coal Convention (Pittsburgh, PA).

Page SJ, Organiscak JA [1995]. An evaluation of improved dust controls for surface drills using Rotoclone collectors. Eng Min J *Nov*:30-31.

Rosbury, KD, Zimmer RA [1983a]. Cost-effectiveness of dust controls used on unpaved haul roads. Volume 1: Results, analysis, and conclusions. PEDCo Environmental, Inc. U.S. Bureau of Mines contract No. J0218021. NTIS No. PB 86-115201.

Rosbury, KD, Zimmer RA [1983b]. Cost-effectiveness of dust controls used on unpaved haul roads. Volume 2: Data. PEDCo Environmental, Inc. U.S. Bureau of Mines contract No. J0218021. NTIS No. PB 86-115219.

Zimmer RA, Lueck SR, Page SJ [1987]. Optimization of overburden drill dust control systems on surface coal mines. Int J Surf Min *1*:155-157.

CHAPTER 6.—UNDERGROUND HARD-ROCK DUST CONTROL

By Fred N. Kissell, Ph.D.,[58] and Jozef S. Stachulak, Ph.D., P.Eng.[59]

In This Chapter

- ✓ Ore pass dust control
- ✓ Drill dust control
- ✓ Blasting dust control
- ✓ Conveyor belt dust control
- ✓ Transfer point and crusher dust control
- ✓ Roadheader dust control

and

- ✓ How much ventilation air to use

This chapter discusses respirable dust control in underground hard-rock mines. These mines use a wide variety of extraction methods, but they have many common dust sources and dust control needs. Ore passes, drills, blasting, conveyor belts, transfer points, crushers, and load-haul-dump operations can be major sources of dust. Roadheaders, which are sometimes used in hard-rock mines, produce dust in large quantities. For the most part, dust in hard-rock mines is controlled with ventilation air, water sprays, and dust collectors. It is also important to prevent dust from getting into the air in the first place. Good dust control practices will reduce overall mine ventilation requirements.

Lack of maintenance is the main source of dust problems in hard-rock mines according to Rodgers [1974], who conducted a dust survey of hard-rock mines several decades ago. Rodgers found that spray systems had clogged sprays, dust enclosures had improperly fitted skirts, and ductwork was plugged and had leaks. Today's mines have better maintenance programs (we think), but when dust levels are high, maintenance is still the first topic to address.

The Mining Association of Canada [MAC 1980] and Knight [1980] provide good general information about hard-rock dust control. For conveyor belt dust control, Goldbeck and Marti [1996] and Swinderman et al. [1997] are valuable sources of information.

---

[58]Research physical scientist, Pittsburgh Research Laboratory, National Institute for Occupational Safety and Health, Pittsburgh, PA.
[59]Chief mines ventilation engineer, Inco Ltd., Copper Cliff, Ontario, Canada.

ORE PASS DUST CONTROL

Falling rock moves air. That's the ore pass dust problem in a nutshell.

Ore and waste passes (figure 6-1) produce large quantities of airborne respirable dust. The broken rock delivered to the passes contains a considerable amount of attached dust from preceding operations such as blasting and loading. The grinding action on the rock as it falls down the pass produces even more dust. However, the main problem is that the falling rock entrains air, producing a powerful "piston effect" that generates pressure surges of dusty air.

Good ore and waste pass design can help to relieve these pressure surges. For example, if the ore and waste passes are located near each other, connecting them on several levels will relieve the pressure. Also, dusty air in the passes can be discharged into a return airway [Marshall 1964; Pullen 1974]. The Mining Association of Canada [MAC 1980] recommends exhausting sufficient air from the ore and waste pass system to indraft 200 ft/min air velocity at all leakages, assuming that one tipping location is open continuously. Discharging this air into a return airway eliminates the need to install a dust collector.[60]

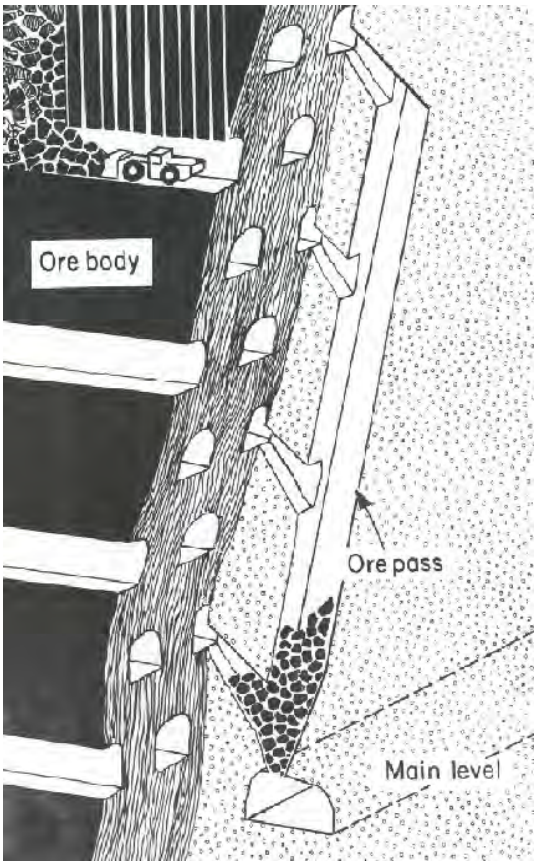

Figure 6-1.—Ore pass adjacent to steeply dipping ore body. ***(Courtesy of the Society for Mining, Metallurgy, and Exploration (SME) (www.smenet.org).)***

No matter what the ore and waste pass design, a critical step in dust control is to prevent its escape and dispersal into working areas by confining dust within the passes. This confinement can be accomplished by a system of stoppings and airtight doors over the ore and rock pass tipping locations. However, since some leakage from these doors is inevitable, another approach to dust control at tipping locations is to isolate them from travelways. This isolation is accomplished by locating the tipping locations in short, dead-end (stub) headings that have local exhaust dust collection systems.

Dust from ore and waste passes will be reduced if the rock is thoroughly wetted before delivery to the tipping site. More water can be added at the tipping site by spraying the rock as it falls into the pass. However, too much water at ore passes can be

[60] Dust collectors located underground must be able to handle high-humidity air and possibly some condensation.

objectionable for many reasons. These include (1) an adverse impact on crushing and milling; (2) accumulation of a large quantity of water on top of the material in the chute, which creates a hazard for workers on the lower levels; and (3) plugging of chutes caused by water-softened clay minerals.

Ore pass dust control is addressed by ILO [1965], Geldenhuys [1959], Kneen [1959], Gray et al. [1961], and Foster [1965]. Ore pass design has been discussed by Hambley [1987]. An extreme case of ore pass pressurization caused by falling material has been discussed by McPherson and Pearson [1997].

DRILL DUST CONTROL

Good drill dust control requires good maintenance.

Drill dust is suppressed by water injected through the drill steel, which has been a common practice for many years [ILO 1965]. Usually, respirable dust is reduced by 95% or better [MSA Research Corp. 1974]. This does not, however, prevent dust from entering the air during the initial collaring period as the drill hole is started. Various means have been tried to prevent the escape of dust during collaring. These range from simple handheld sprays to elaborate types of suction traps around the end of the drill steel. None of these are very efficient.

Drills powered by compressed air are much less common than in the past, eliminating the dust problems associated with their use. For example, if some of the compressed air operating the drill leaks into the front head of the drill and escapes down the drill steel, it will cause dry drilling and carry dust out of the hole. Compressed air escaping through the front-head release ports will atomize some of the water in the front head. This atomized water evaporates quickly and, if the water is dirty, many dust particles will remain in the air [Sandys and Quilliam 1982].

MSA Research Corp. [1974] has listed the factors that can lead to high dust levels on drills. Many result from lack of proper maintenance. These are failure to use water, inadequate quantities of water, plugged water holes in the drill bit, dull drill bits, and dry collaring.

BLASTING DUST CONTROL

Water and ventilation are necessary, but the key to reducing dust exposure is blasting off-shift.

Water is important in controlling dust generated by blasting. The area surrounding the blast (walls, floor, and back) should be thoroughly sprayed beforehand. This precaution will prevent dust settled out during previous operations from becoming airborne. A uniform rock moisture content[61] of only 1% greatly reduces dust compared to dry rock [Quilliam 1974]. However, since it is difficult to wet rock uniformly under realistic mining conditions, the optimum moisture content can be much higher.[62] The water used for dust suppression, particularly in drilling and in blasting, should be as clean as possible, because the evaporation of dirty water can also release dust.

Sufficient ventilation is critical for the control of blasting dust since water alone is usually inadequate. Blasting dust and fumes should be diluted quickly and exhausted to the surface[63] via an untraveled return route. If this is not possible, the common practice is to arrange the blasting schedule so that the contaminated air will pass through working places when the miners are absent.

CONVEYOR BELT DUST CONTROL

A conveyor belt can generate large amounts of respirable dust from several sources. If the belt is not clean, dust is knocked from the belt as it passes over the idlers. Belt scraping and washing will reduce this dust source, and if the belt is dry, just wetting it can help. Also, much respirable dust originates at belt transfer points.

Belt cleaning by scraping and washing. Conveyor belts are usually equipped with belt scrapers; some have belt washers as well. Several manufacturers sell scrapers and washers; these play an important role in reducing the amount of dust generated by conveyor belt carryback. Carryback is that portion of the carried material that sticks to the belt instead of falling off at the head pulley. It becomes airborne dust as the belt dries and passes over the return idlers. When dust levels are high, the usual approach is to add a second or even third scraper rather than trying to get a single scraper to work better.

While multiple scrapers will reduce dust, they may be more efficient at spillage control than respirable dust control. Roberts et al. [1987] have shown that with each successive scraping, both the percentage of fines and the moisture level of the carryback substantially increase. This

[61] Weight of water in the rock divided by the weight of rock.

[62] Quilliam [1974] recommends 5%, but this seems high to us.

[63] Much of the dust will be deposited in the return airways. For example, Ford [1976] found that 45% of a 4-µm particle size dust cloud was deposited within a distance of 600 ft. Bhaskar et al. [1988] measured 38% deposition of respirable dust at air velocities over 300 ft/min and 67% deposition at an air velocity of 165 ft/min. Stachulak et al. [1991] measured a 66% decrease in respirable dust in a 500-ft vertical return air raise.

shows that the larger material is preferentially removed by scraping and the smallest fines (which generate respirable dust) tend to stay stuck to the belt.

If multiple scrapers do not remove enough carryback to cut the respirable dust sufficiently, a water wash system may be necessary. These systems spray the belt with water in addition to scraping it. Stahura [1987] has written a comprehensive discussion of conveyor belt washing. Planner [1990] has reported on the average belt-cleaning efficiency of water sprays when used with primary and secondary scrapers. In the Planner study, water sprays placed between the primary and secondary scrapers reduced carryback from 11.1% to 3.4%. In another test, water sprays added to a secondary scraper reduced carryback from 13.9% to 1.1%.

Belt sprays also reduce airborne dust. Rodgers et al. [1978] added a 150-gpm water spray system to dry scrapers on a 54-in belt at a taconite processing plant. The sprays reduced respirable dust by 48% and total dust by 78% compared to dry scrapers alone. More recently, Baig et al. [1994] reported that airborne (respirable and float) coal dust levels were reduced 80%-90% when their belt scrapers were augmented with spray wash boxes.

Wetting of dry belts. Several studies have shown that wetting the bottom (return) belt can reduce dust from a dry belt. For example, Courtney [1983] measured the respirable dust reduction from a single 0.33-gpm spray onto the top surface (the noncarrying surface) of the bottom belt. The goal was to prevent dust from being knocked loose by the tail pulley and upper idlers. The spray was followed by a piece of ordinary floor carpet that wiped the belt to prevent channeling of the water. The spray and carpet were mounted close to the tail pulley so that the belt was wet as it passed around the tail pulley and moved outby over the upper idlers (figure 6-2).

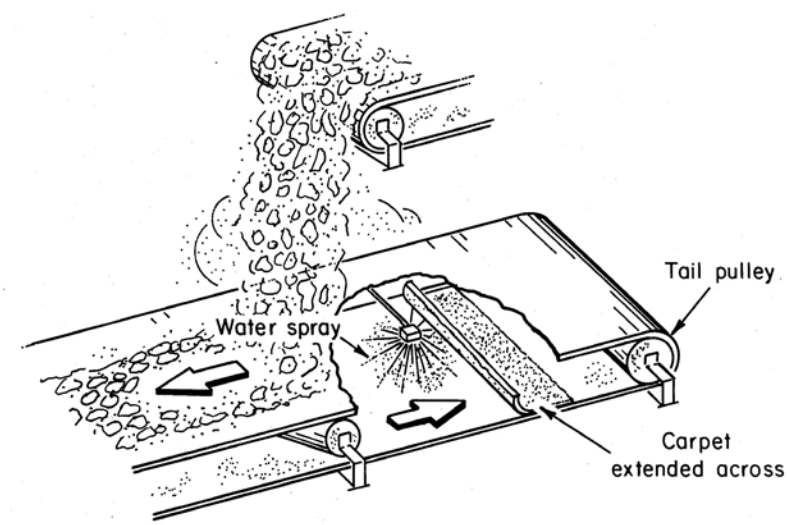

Figure 6-2.—Wetting the top surface of the bottom belt.

Respirable dust reduction from installation of the spray and carpet averaged 75%. A 2-gpm spray without the carpet worked about as well. Slippage from excessive wetting was not a problem, as water usage was low (only 2 gpm) and the belt then traveled for 5,000 ft before passing over the drive at the head end.

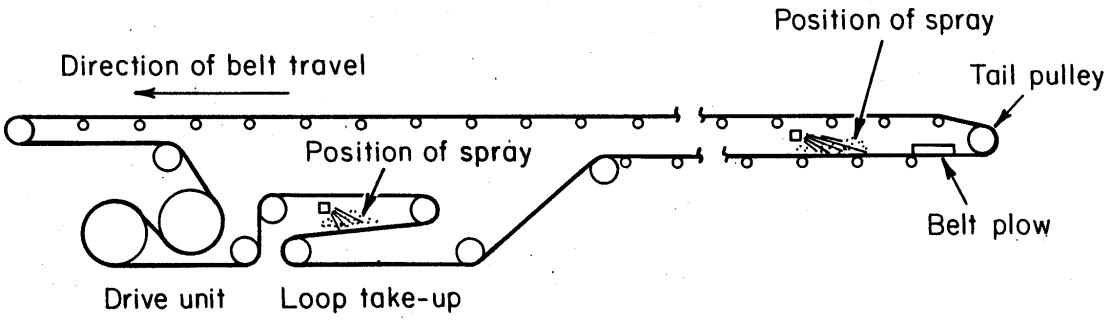

Figure 6-3.—Wetting both surfaces of the bottom belt.

A decade earlier than Courtney, Ford [1973] tested a system that wetted both surfaces of the bottom belt (figure 6-3). A spray in the loop take-up near the belt head wetted the carrying surface so that dust was not knocked loose by the ingoing trip over the lower idlers. Then, near the tail pulley, the noncarrying surface of the bottom belt was wetted by a second spray for the trip around the tail pulley and across the upper idlers, similar to the system described by Courtney. Sprays were mounted so as to wet the entire width of the belt, and they were controlled automatically to operate only when the belt ran. A belt plow was used in place of the carpet. Respirable dust was reduced by 67% with a total (all sprays) water flow of 0.53 gpm.[64]

TRANSFER POINT AND CRUSHER DUST CONTROL

Transfer points. The traditional approach to transfer point dust control is to tightly enclose the transfer point, exhaust the dust-laden air from the enclosure through a duct, and either remove the dust from the air with a dust collector or discharge the dust to a return airway (figure 6-4).

Transfer point dust control can be difficult because the falling rock has a “piston effect” due to air entrainment. This air entrainment draws mine air in at the top of the transfer point enclosure, and it can push dusty air out of the bottom of the enclosure. The piston effect of the falling rock can be reduced by lowering the drop distance, by using “rock ladders” to break the fall of the rock, and by increasing the enclosure size so that entrained air can circulate back to the top of the enclosure. Tight enclosure of the transfer point requires adjustable skirtboard sealing systems, a means to prevent belt sag in the loading zone, and careful sealing of belt entry and exit locations, among others. The usual airflow guideline is to plan for 200 (or more[65]) ft/min air velocity through all unavoidable openings.

---

[64]Low-flow spray nozzles are prone to clogging because of their small orifice size. To avoid nozzle clogging while reducing water use, control timers have been developed to cycle belt sprays on and off (BWI Eagle, Inc.). Timers also allow better control over the degree of belt wetting.

[65]MAC [1980] recommends adding 25% to the 200 ft/min as a safety factor. Yourt [1969] recommends that if a loaded belt is leaving the enclosure the air velocity be set at 200 ft/min plus the belt speed to counteract the drag effect. For instance, if the belt speed is 300 ft/min, then the air velocity into all unavoidable openings should be 500 ft/min. Rodgers [1974] gives a rule of thumb of 700-800 cfm of exhaust ventilation per foot of belt width.

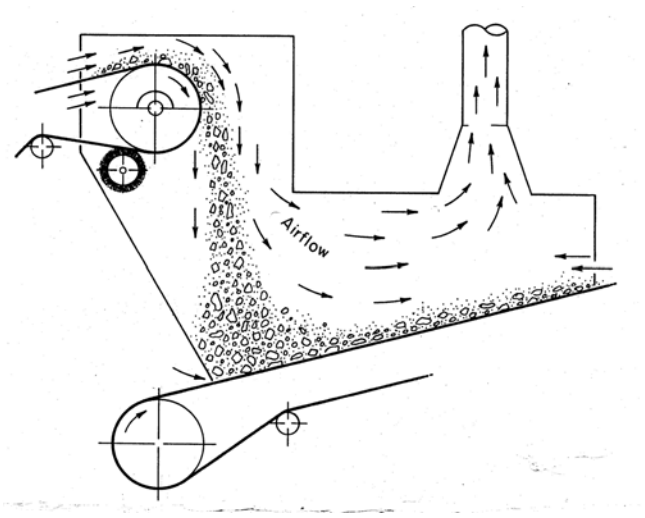

Figure 6-4.—Dust-laden air exhausted from transfer point enclosure.

Duct takeoffs from transfer point (and crusher) enclosures must be designed to avoid picking up large particulate. The Mining Association of Canada [MAC 1980] recommends that the takeoff air duct be at least 6 ft from the falling rock to avoid picking up particles. Yourt [1969] suggests that the base of the takeoff cone be large enough so that the velocity of air exhausted is 500 ft/min or less.

In addition to proper design of takeoffs, the ductwork leading to the dust collector or return airway must be designed to prevent dust settling. Yourt [1969] suggests that risers be installed at a steep angle, not less than 58º, and that horizontal runs be sized for a velocity of at least 3,000-3,500 ft/min. ACGIH [2001] suggests a velocity of 3,500-4,000 ft/min. Cleanout ports should always be provided in horizontal ductwork.

Another way to reduce dust at transfer points is to provide an enclosed sliding chute to transfer the material. Sliding chutes and spouts are widely used in materials handling; much information on them is available [Page 1991; Mody and Jakhete 1987].

There is a wealth of information on how to reduce transfer point dust [MAC 1980; Goldbeck and Marti 1996; Swinderman et al. 1997; Mody and Jakhete 1987; Yourt 1969; ACGIH 2001; Organiscak et al. 1986].

Crushers. Crushers in mines range from small roll types used in coal mines to large cone types used in hard-rock mines and mills. Whatever the size and method of crushing, dust is controlled by water sprays and local exhaust ventilation from the crusher enclosure. The amount of water needed is hard to specify. It depends on the type of material crushed and the degree to which water will cause downstream handling problems. If the rock is dry, a starting point is to add a water quantity equivalent to 1% of the weight of the material being crushed [Quilliam 1974].

Crushers need lots of air and lots of water because they break lots of rock.

The amount of air required depends on how much the crusher can be enclosed. Enough air should be exhausted from a plenum under the crusher to produce a strong indraft at the jaw, grizzly, and any other openings around the crusher. The design guidelines for determining the required airflow are the same as those for transfer points. The unavoidable open area is

calculated and multiplied by a 200 ft/min indraft velocity.[66] The required airflow is usually large. For example, Rodgers et al. [1978] have described how dust from a 5-ft cone crusher was reduced by using a 75,000-cfm[67] exhaust ventilation system and a control booth for the operators.[68] Yourt [1969] has given a comprehensive set of design principles for dust control at crushing and screening operations. If there is an ore pass above the crusher, precautions should be taken to ensure that it is not pulled empty.

If the crusher can be located in a short, dead-end (stub) heading, then air can be drawn into the crusher in the usual way and then discharged from the heading through ductwork. This design approach creates an air movement into the stub heading that confines any dust that escapes the crusher.[69]

MAC [1980], Walker [1961], Phimister [1963], and Ahuja [1979] have described dust control methods used for large crushers at underground locations. Foam is also used to control dust at crushers, particularly where water use must be limited. Use of foam is described in chapter 1 on dust control methods.

VENTILATION OF PRODUCTION AREAS

Production areas are ventilated by directing an air split from the main ventilating stream through the workings. Sandys and Quilliam [1982] have recommended that a minimum air velocity of 100 ft/min is needed to remove mineral dust in headings where track- and tire-mounted loaders are used for mucking ore. Dust generated by moving equipment can be reduced by applying water or chemicals (most commonly hygroscopic salts) to the roadways.[70]

However, if enough air is supplied to meet the requirements of the diesel equipment in the heading, then the mineral dust is well controlled. The usual diesel airflow criterion has been to supply 100-125 cfm per horsepower of diesel equipment, all equipment being cumulative in any one split.

New MSHA regulations on diesel particulate, enacted in 2001, will require even more air in U.S. mines unless the particulate level can be reduced by other means.

---

[66]Plus a 25% safety factor [MAC 1980]. See also footnote 8.

[67]Large air quantities may be required because falling rock induces its own airflow. Pring [1940] investigated the amount of air required to produce an indraft in surge bins at crusher installations. About 35,000 cfm was required at a large crusher installation.

[68]If large (80% or more) dust reductions are sought for workers near a crusher, the most practical way to achieve this is to provide an enclosed and pressurized control booth supplied with filtered air.

[69]The benefits of locating a crusher in a stub heading are explained in more detail in chapter 4 on stone mines.

[70]Reduction of roadway dust is discussed at greater length in chapter 5 on surface mines.

Stachulak [1989] has pointed out that, not long ago, 10,000 cfm[71] was adequate for most development headings. However, some mines are now driving single drifts requiring 80,000 cfm to meet legal requirements for the diesel equipment.

In development headings, a blowing system kept to within 100 ft of the face will usually provide a satisfactory dust level. Exhaust systems can do a good job of removing dust when the end of the duct is held within 10 ft of the dust source. However, keeping a 10-ft distance can be difficult in development headings because of potential blast damage to the duct.

ROADHEADER DUST CONTROL

Roadheaders are occasionally used in hard-rock mines, but they are also used in many other underground excavations, from tunnels to wine storage caves. They have a reputation for generating dust for several reasons. Headings excavated by roadheaders are often larger in cross-section, and it can be hard to supply enough ventilation air to confine the dust cloud at the face. Some aspects of roadheader design also contribute to dust buildup. The cutting boom is narrow, so there is little of the dust cloud confinement provided by a wide boom. Also, the operator compartment is sometimes located far forward where the dust is inevitably higher. Finally, remote control of the machine, the best way to deal with dust, may not be available.

Dust control methods for machines like roadheaders usually depend on some degree of dust cloud confinement. In mines where methane is released along with the dust, confining the dust cloud will raise the methane concentration.

Below are the various methods used to control roadheader dust, assuming that the material being excavated generates no methane gas.[72]

Ventilation-based controls. For a ventilation-based dust control, provide an adequate air volume using an exhaust duct with the duct inlet located close to the face. The volume should be sufficient to provide a forward air velocity in the heading of at least 60 ft/min based on the cross-sectional area of the empty heading. The duct inlet should be at least 10 ft forward of the operator and within 5 ft of the face.[73] Decreases in the air volume and increases in the duct inlet

[71]The usual guideline was 50 cfm per square foot of face area, equal to a velocity of 50 ft/min.

[72]Lowering spray pressures will reduce the air turbulence. When air turbulence is reduced, methane concentration levels may rise. When a half-curtain is used at a gassy face, methane can build up behind the curtain. A good discussion of roadheader dust control, both with and without methane, is in Hole and Belle [1999].

[73]These recommended air velocities and duct distances are target values based on average conditions, assuming that remote control is not used. If a mine is under more stringent standards because of silica in the dust, more air may be needed.

distance can have a big effect on dust levels (figure 6-5) [Ford and Hole 1984].

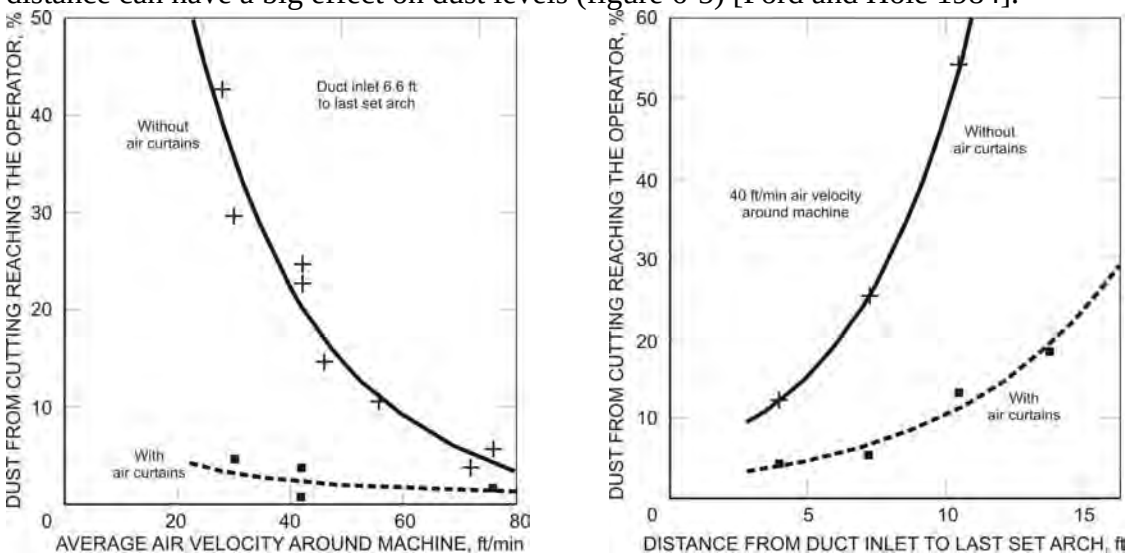

Figure 6-5.—Effect of duct inlet position, air velocity, and air curtain use on dust levels (from Ford and Hole [1984]).

The second step in ventilation-based dust control is to locate and use water sprays so as to minimize air turbulence at the face. High-pressure sprays or nozzles located to spray out into the open air will produce air turbulence. This turbulence will cause the dust cloud to expand and back up (rollback) against the ventilation air, covering the machine operator [Hole and Belle 1999]. To minimize turbulence, the water sprays on the boom should be located close to the cutting head to wet only the cutting head and the broken rock falling down from it. The water pressure (as measured at the spray nozzles) should be limited to 100 psi or less. If more water must be applied, larger orifice nozzles should be used. If the rock on the gathering pan must be wetted, only high-volume, low-pressure nozzles should be used. Finally, in headings where the cross-sectional area (not counting the machinery) is over 100 ft^2, a half-curtain should be considered in order to raise the air velocity for better dust confinement. Dust rollback and use of a half-curtain are explained more fully in chapter 1 on dust control methods.

Machine-based controls. Three machine-based controls are available to lower roadheader dust. First and most important is remote control. In conjunction with exhaust ventilation, remote control of the roadheader allows the machine operator to step back away from the dust cloud at the cutting face. In most cases, it is the most effective way to lower the operator's dust level.

The second control is to use a wet-head machine with low-pressure sprays. Several research studies have shown that wet heads will yield moderate dust reductions. The downside of wet heads is that the sprays can produce turbulence that causes the dust cloud to expand and roll back against the ventilation air, covering the machine operator with dusty air. For this reason, the nozzle pressure should be held below 50 psi. Hole and Belle [1999] report that a roadheader wet head operating at 20 psi and 6 gpm gave a 40% dust reduction compared to external sprays.

The third machine-based dust control is to use a Coanda air curtain to hold the dust cloud against the cutting face and away from the operator. Air curtains for dust control were devised in Germany and the United Kingdom. They are available as an option on some new machines. The greatest benefit is obtained when the ventilation quantity is low and the exhaust duct inlet cannot be held close enough to the cutting face. In underground testing, dust rolling back from the face was reduced by 80% when air curtains were used[74] (figure 6-5) [MRDE 1983; Hole and Belle 1999].

The best way to approach roadheader dust control will depend on individual circumstances. Providing sufficient airflow, keeping the exhaust duct inlet close to the cutting face, and using remote control will normally be sufficient to control dust. However, sufficient airflow and remote control are not always available. Keeping the duct inlet close to the face subjects it to damage by the cutter head. Therefore, if these conventional ventilation and remote-control remedies cannot be used, a half-curtain should be tried. Also, it might be possible to cut the face in two steps, first on the duct side, after which the duct is moved forward, and then the other side. Diligent replacement of worn picks can always help as well.

If all else fails, the operator of the roadheader should have a respirator or a fully enclosed cab that is equipped with an air filtration system. Cabs with filtration systems are discussed in chapter 5 on surface mines. Dust respirators are discussed in chapter 9.

REFERENCES

ACGIH [2001]. Industrial ventilation: a manual of recommended practice. 24th ed. Cincinnati, OH: American Conference of Governmental Industrial Hygienists.

Ahuja RC [1979]. Underground air filters solve dome dust problems. Can Min J Jul:54-57.

Baig NA, Dean AT, Skiver DW [1994]. Successful use of belt washers. In: Proceedings of the American Power Conference. Chicago, IL: Illinois Institute of Technology, pp. 976-978.

Bhaskar R, Ramani RV, Jankowski RA [1988]. Experimental studies on dust dispersion in mine airways. Min Eng Mar:191-195.

Courtney WG [1983]. Single spray reduces dust 90%. Coal Min & Process Jun:75-77.

Ford VHW [1973]. Bottom belt sprays as a method of dust control on conveyors. Min Technol (U.K.) 55(635):387-391.

Ford VHW [1976]. Investigations into the deposition of airborne respirable dust along underground airways. Mining Research and Development Establishment (MRDE) Report No. 65. National Coal Board, U.K.

[74]The testing was done in a 16.5-ft by 12-ft arched section heading. Air curtains may not work as well in larger-sized headings.

Ford VHW, Hole BJ [1984]. Air curtains for reducing exposure of heading machine operators to dust in coal mines. Ann Occup Hyg 28(1):93-106.

Foster KJ [1965]. The ore pass: a return airway. Can Min J Oct:79-81.

Geldenhuys WH [1959]. Ore pass dust control. J Mine Vent Soc S Afr 12(Jan):pp. 22-23.

Goldbeck LJ, Marti AD [1996]. Dust control at conveyor transfer points: containment, suppression, and collection. Bulk Solids Handling 16(3):367-372.

Gray BJ, MacAulay CA, Yourt GR [1961]. Dust control at underground dumps, chutes, and crusher. Can Min J Oct:64-69.

Hambley D [1987]. Design of ore pass systems for underground mines. CIM Bull 80(897):25-30.

Hole BJ, Belle BK [1999]. Road header environment control (phase I, II, and III). Final report on project COL 603. CSIR Miningtek, Republic of South Africa. Available from Safety in Mines Research Advisory Committee (www.simrac.co.za).

ILO [1965]. Guide to the prevention and suppression of dust in mining, tunnelling, and quarrying. Geneva, Switzerland: World Health Organization, International Labour Office.

Kneen T [1959]. Dust control at dumps and passes. Can Min J Aug:93-98.

Knight G [1980]. Generation and control of mine airborne dust. CANMET report 80-27E. Ottawa, Ontario, Canada: Canada Centre for Mineral and Energy Technology.

MAC [1980]. Design guidelines for dust control at mine shafts and surface operations. 3rd ed. Ottawa, Ontario, Canada: Mining Association of Canada.

Marshall L [1964]. Dust control at ore and waste pass dumps. Can Min J Oct:84-86.

McPherson MJ, Pearson N [1997]. The airblast problem in the orepasses of the Grasberg mine, PT Freeport, Indonesia. In: Ramani RV, ed. Proceedings of the Sixth International Mine Ventilation Congress (Pittsburgh, PA, May 17-22, 1997), pp. 113-117.

Mody V, Jakhete R [1987]. Dust control handbook for minerals processing. Martin Marietta Corp. U.S. Bureau of Mines contract No. J0235005. NTIS No. PB88-159108.

MRDE [1983]. Application of air curtains and other methods for controlling ventilation and providing clean air at the workplace. Final report on ECSC research project 7256-12/030/08. National Coal Board, Mining Research and Development Establishment, U.K.

MSA Research Corp. [1974]. Control of respirable dust in noncoal mines and ore processing mills – handbook. U.S. Bureau of Mines contract H0220030. NTIS No. PB 240 646.

Organiscak JA, Jankowski RA, Kelly JS [1986]. Dust controls to improve quality of longwall intake air. Pittsburgh, PA: U.S. Department of the Interior, Bureau of Mines, IC 9114. NTIS No. PB87-167573.

Page J [1991]. Examples of good and bad chute design. In: Proceedings of the Chute Design Conference. Bionic Research Institute, Republic of South Africa.

Phimister G [1963]. Ventilation and dust control in an underground crushing-conveying system. J Mine Vent Soc S Afr *16*(1):1-10.

Planner JH [1990]. Water as a means of spillage control in coal handling facilities. In: Proceedings of the Coal Handling and Utilization Conference (Sydney, Australia). Barton, Australia: Institution of Engineers Australia, pp. 264-270.

Pring RF [1940]. Dust control in large-scale ore concentrating operations. American Institute of Mining and Metallurgical Engineers, technical publication No. 1225.

Pullen PF [1974]. Dust control at vertical ore and waste passes. Can Min J *95*(9):30-31.

Quilliam JH [1974]. Sources and methods of control of dust. In: The ventilation of south African gold mines. Yeoville, Republic of South Africa: The Mine Ventilation Society of South Africa.

Roberts AW, Ooms M, Bennett D [1987]. Bulk solid conveyor belt interaction in relation to belt cleaning. Bulk Solids Handling 7(3):355-362.

Rodgers SJ [1974]. Survey of past and present methods used to control respirable dust in noncoal mines and ore processing mills – final report. MSA Research Corp. U.S. Bureau of Mines contract No. H0220030. NTIS No. PB 240 662.

Rodgers SJ, Rankin RL, Marshall MD [1978]. Improved dust control at chutes, dumps, transfer points, and crushers in noncoal mining operations. MSA Research Corp. U.S. Bureau of Mines contract No. H0230027. NTIS No. PB 297-422.

Sandys MPJ, Quilliam JH [1982]. Sources and methods of dust control. In: Environmental engineering in south African mines. Yeoville, Republic of South Africa: The Mine Ventilation Society of South Africa.

Proceedings of the Fourth U.S. Mine Ventilation Symposium (Berkeley, CA, June 5-7, 1989).

Stachulak JS, Dainty ED, McPherson MJ [1991]. The phenomenon of dust deposition in exhaust ventilation shafts at INCO mines. J Mine Stachulak JS [1989]. Ventilation strategy and unique air conditioning at INCO Limited. In: Vent Soc S Afr Nov:183-195.

Stahura RP [1987]. Conveyor belt washing: is this the ultimate solution? TIZ-Fachberichte *111*(11):768-771. ISSN 0170-0146.

Swinderman RT, Goldbeck LJ, Stahura RP, Marti A [1997]. Foundations 2: the pyramid approach to dust control and spillage from belt conveyors. Neponset, IL: Martin Engineering.

Walker CT [1961]. The control of dust in an underground crushing station at the new Broken Hill Consolidated Ltd. mine, Australia. J Mine Vent Soc S Afr *14*(11):223-233.

Yourt GR [1969]. Design principles for dust control at mine crushing and screening operations. Can Min J *90*(10):65-70.

CHAPTER 7.—CONTROL OF DUST IN HARD-ROCK TUNNELS

By Fred N. Kissell, Ph.D.[75]

In This Chapter

- ✓ Finding the dust source
- ✓ Ventilation and dust collector malfunctions
- ✓ Upgrading the dust controls
- ✓ Design stage ventilation planning

This chapter explains how to reduce respirable dust[76] in hard-rock tunnels during excavation by using tunnel boring machines (TBMs). The first steps in combating a dust problem are to take dust samples to pinpoint the source, check the ventilation system, and check the dust collector. If the ventilation system and dust collector are operating properly, then other dust controls such as water sprays and conveyor belt scrapers must be upgraded. For tunnels in the design stage, recommended air quantities are provided.

FINDING THE DUST SOURCE AND LOOKING FOR VENTILATION MALFUNCTIONS

The first steps in fighting a dust problem are to take dust samples to pinpoint the source, check the ventilation system, and check the dust collector. Without knowing the exact source, efforts to reduce dust are hit-and-miss (mostly miss).

Taking samples to pinpoint the dust source. In tunnels with high levels of airborne dust, the first task is to pinpoint where the dust enters the airstream. Most dust originates from rock breakage at the tunnel face, but the location where this dust enters the airstream can vary. Dust can leak from behind the TBM face shield, from gaps in the ventilation duct, or from a mal-functioning dust collector. It can be entrained into the air from the muck on a moving conveyor belt. It can even be shaken loose from the underside of the belt as it passes over the idlers. As a start, to locate the dust source, dust samples and air quantity measurements should be taken at the following locations:

---

[75]Research physical scientist, Pittsburgh Research Laboratory, National Institute for Occupational Safety and Health, Pittsburgh, PA.

[76]An information source for controlling methane and diesel fumes in tunnels is Kissell [1996].

(1) At the portal or at the base of the entrance shaft
(2) At a location one-third of the way from the portal to the TBM
(3) At a location two-thirds of the way from the portal to the TBM
(4) At the rear of the TBM trailing gear, about 50 ft toward the portal
(5) At the middle of the TBM trailing gear
(6) At the front of the TBM trailing gear
(7) At the front of the TBM where ground support is installed
(8) At the outlet of any ventilation duct if the outlet is inside the tunnel

The dust samples can be 8-hr gravimetric filter samples, or they can be measurements taken with a light-scattering dust monitor. If the latter is used, repetitive readings must be made to ensure that observed changes in the dust level are not the result of changes in the TBM cutting rate.

Figure 7-1 gives the results from a dust concentration survey in a tunnel with an exhaust ventilation system. Both gravimetric filter and light-scattering measurements were made at regular intervals between the portal and the front of the TBM. The figure shows that, for this tunnel, most of the dust breathed by workers entered the airstream between the TBM and the portal, either from the conveyor belt or a leaking ventilation duct.

After the initial sampling, additional sampling in and around the TBM and trailing gear with a light-scattering dust monitor can provide useful information. Possible dust sources at the TBM include leakage from the head or from ventilation duct, emissions from rock drilling and

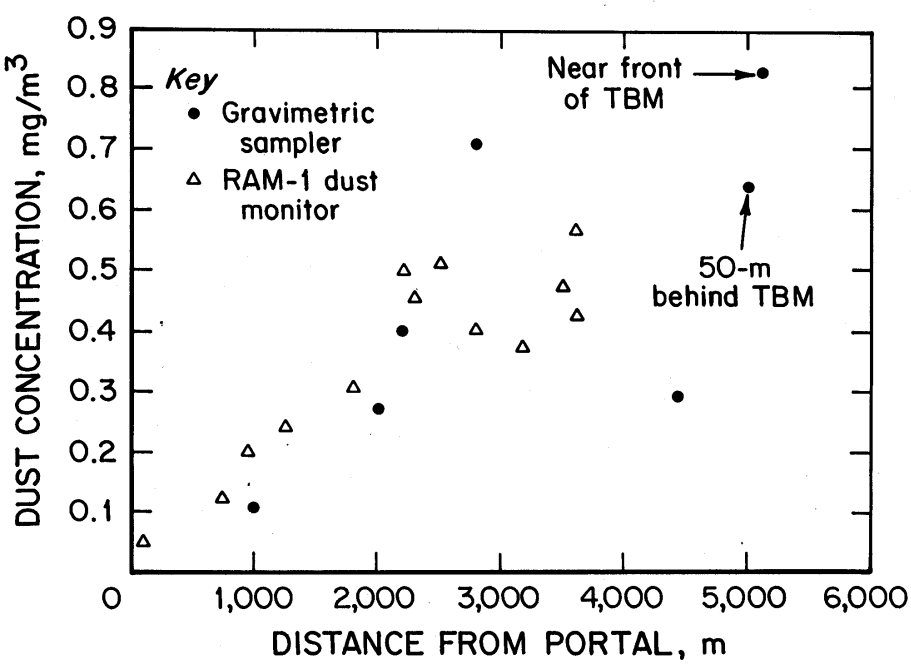

Figure 7-1.—Results from a dust concentration survey.

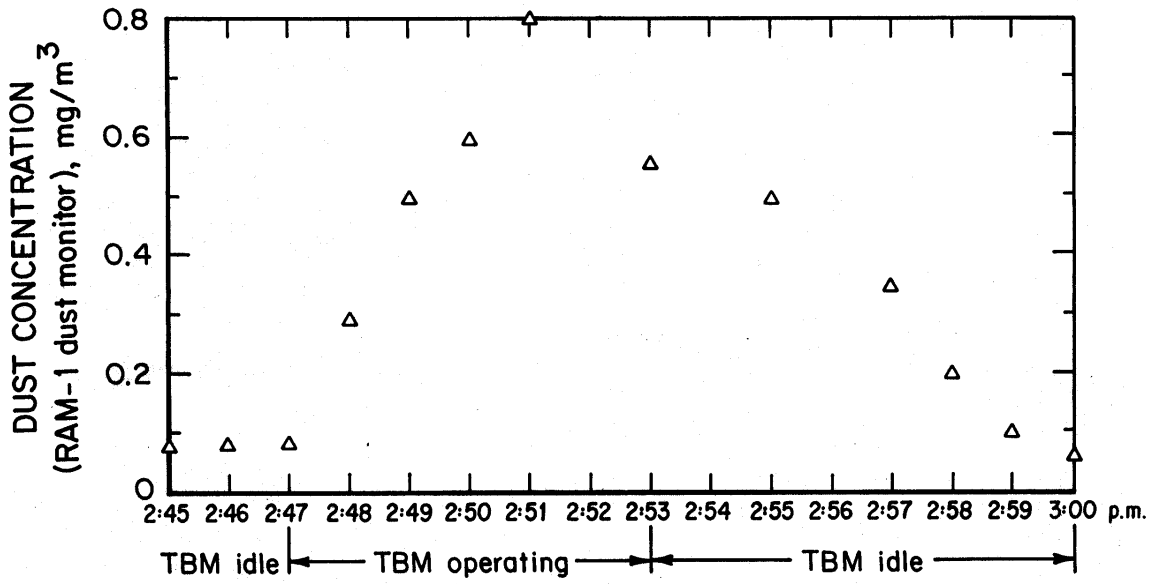

Figure 7-2.—Dust concentration measured near cutter head with TBM idle and operating.

conveyor transfer points, or the stirring of settled dust by work activities and cooling fans. To assess which of these are relevant, a light-scattering dust monitor can be used to measure the dust level close to each suspected source.

Figure 7-2 demonstrates the value of additional sampling around the TBM. In this tunnel, the only dust level of any consequence was measured at the front of the TBM near the cutter head as the cutter head operated. As the figure shows, the dust concentration rose (with little delay) after the cutter head began to rotate, then immediately dropped when the cutter head stopped. Rising and falling concentration profiles of this sort were only measured close to the cutter head, which indicates that the dust was leaking out somewhere close to the cutter head.

Checking the ventilation system. Air quantity measurements, taken at the same locations as the dust samples, are to ensure that the ventilation system is operating properly. Hidden leaks in ventilation ductwork are common and may cause abnormally low air velocities in a portion of the tunnel. Thus, high dust levels may result from the simple failure to deliver enough air. Ventilation systems with multiple fans will inevitably leak and recirculate some air. The recirculated air will usually contain dust, and the amount of recirculation may be enough to create a dust problem.

If recirculation is a concern, small holes should be drilled in the ventilation duct and the air pressure checked with the static pressure port of a Pitot tube. Exhaust systems should be under negative pressure, and blowing systems under positive pressure. Short regions of ductwork next to the fans may have the pressure reversed because of system imbalances, but reversed pressure regions should make up a very minor part of the ductwork.

If the dust concentration at the front of the TBM is much higher than that measured elsewhere, check to ensure that the ventilation duct is extended far enough forward. Exhaust duct must extend as far as the forwardmost worker, and ideally an additional 10 ft or more. Blowing duct must extend to within 20 ft of the forwardmost worker, assuming the jet of air emerging from the duct is unobstructed.

Unusually warm air from the TBM electrical equipment may indicate a malfunctioning ventilation system.

Occasionally, the ventilation system design includes some faults. Faulty designs inevitably result in higher dust levels. A common ventilation fault is the failure to provide overlap in auxiliary, or scavenger, systems. Figure 7-3 shows a properly operating scavenger system. The main fan acts to bring in clean air; the scavenger fan inlet is located in the clean air stream.

Figure 7-4 shows what happens when the proper overlap between the main duct inlet and the scavenger inlet is not maintained. The scavenger fan picks up some contaminated air returning from the face, so the amount of clean air delivered to the face is reduced.

Clean air delivery also suffers in mismatched scavenger systems. Figure 7-5 shows a blowing main ventilation duct mismatched to a blowing scavenger system. The scavenger fan intake is a mixture of clean air from the main duct and contaminated air returning from the face.

Another common problem found in tunnel ventilation systems is the low velocity zone created by moving similar quantities of air through ductwork in opposite directions. For example, figure 7-6 shows a tunnel with 5,000 cfm in a scavenger fan fresh air duct and 5,000 cfm in a dust

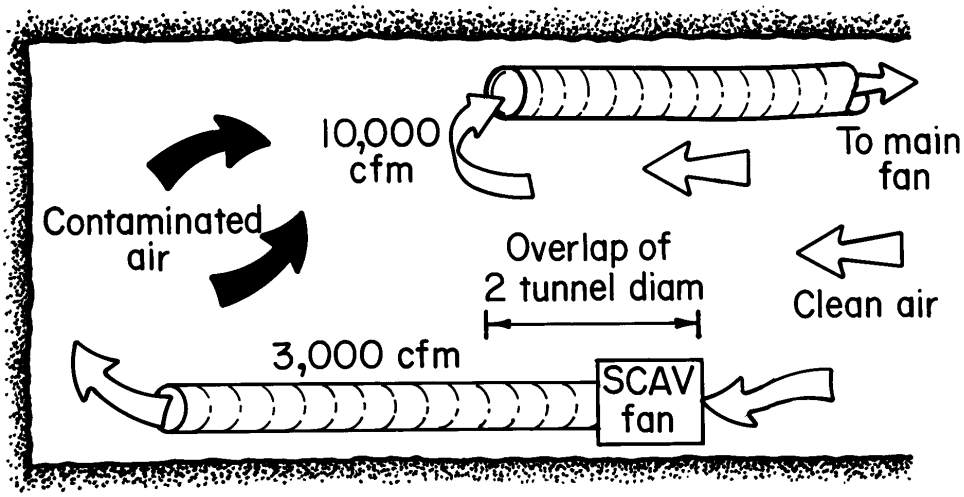

Figure 7-3.—Auxiliary, or scavenger, system with adequate overlap.

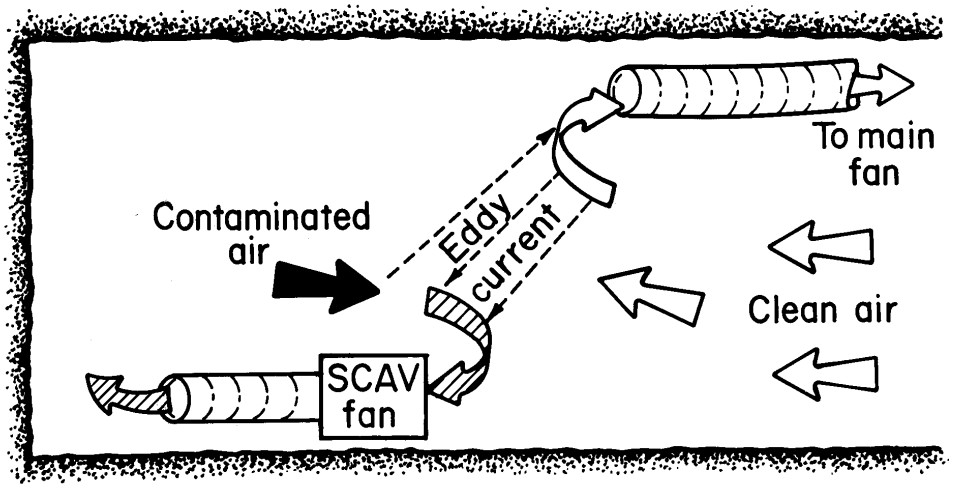

Figure 7-4.—Auxiliary, or scavenger, system with no overlap.

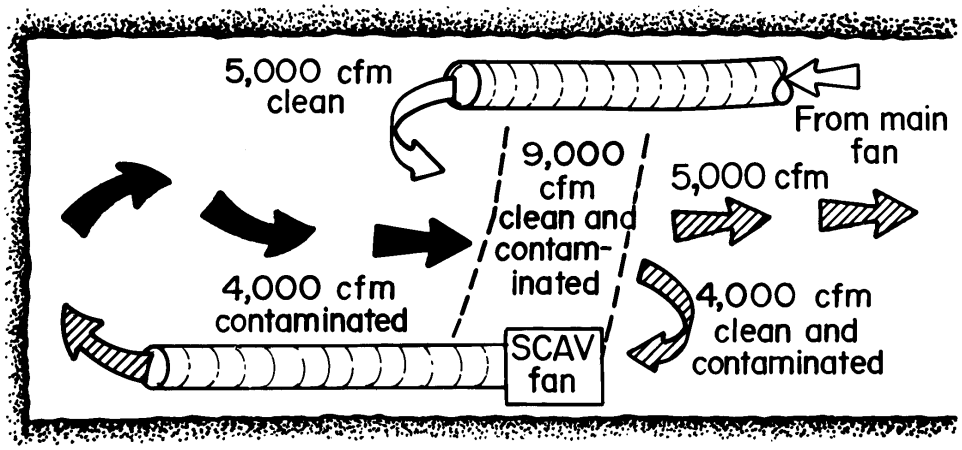

Figure 7-5.—Loss of ventilation efficiency from mismatched airflow directions.

collector duct. Because these two ducts have similar air quantities moving in opposite directions, there is a zone of low air movement between them. Therefore, dust sources in this zone can produce high dust concentrations.

It should be noted that if the scavenger fan duct shown in figure 7-6 moved air in the opposite direction, the air quantity delivered to the immediate face area would be increased from 5,000 to 10,000 cfm, and the amount of air moving through the zone between the ducts would be 10,000 cfm.

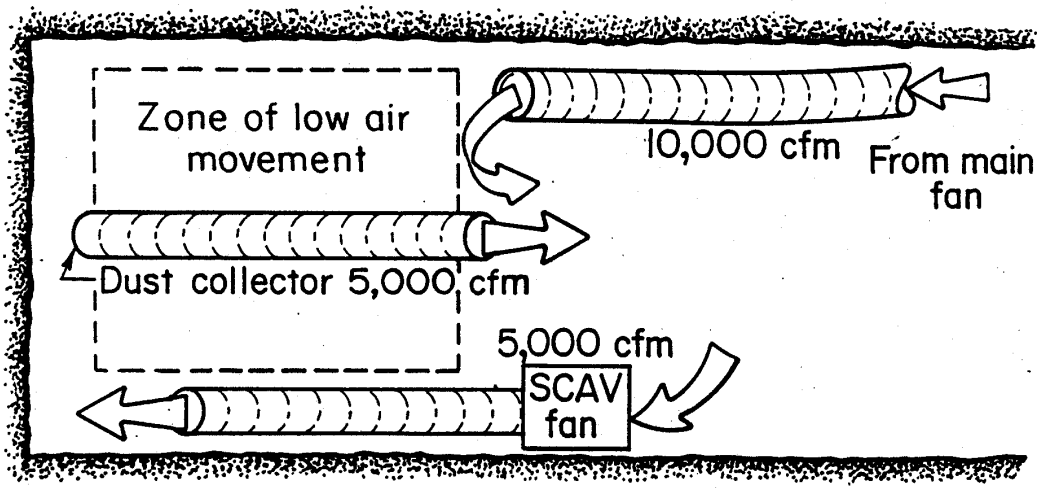

Figure 7-6.—Zone of low air movement is created because ducts have similar air quantities moving in opposite directions.

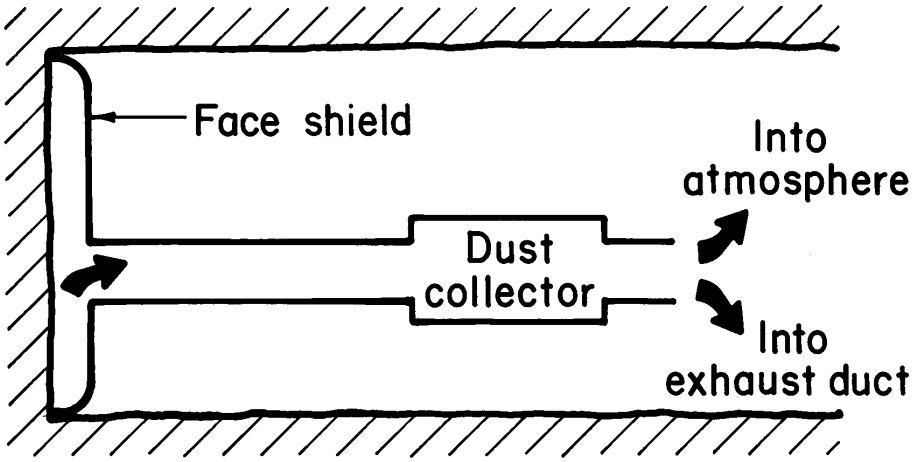

Figure 7-7.—TBM dust collection system.

Checking the dust collector. Most dust is removed via the dust collector system (figure 7-7), so it is important that the system works properly. Dust collectors in mines and tunnels can be high-maintenance equipment. Screens and filters often clog. Gaskets disappear, and access doors leak. Ductwork leading to the collector fills with coarse particulate that cuts off the air-flow. Fans located on the inlet side of the collector suffer rapid erosion of their blades. Filters can be improperly seated, with air leaking around them. Filters also develop holes from abrasion by larger sized particulate. A dust sample and an air quantity measurement taken in the collector outlet will reveal if the filters are working properly and whether the air quantity is adequate.

UPGRADING THE DUST CONTROLS

Upgrade the other dust controls when checks of the ventilation and dust collector show no correctable problems. The water spray system should adequately wet the broken rock.
The dust controls on the drills and conveyor should also be upgraded if they are sources of dust. Consider using foam to control dust.

Water sprays. Water sprays have two roles: (1) airborne capture and (2) surface wetting of the broken rock. Of the two, airborne capture is less effective. The typical water spray gives no more than 30% capture of respirable dust [Courtney and Cheng 1977]. Because of this, adequate surface wetting of the broken rock is most important. The vast majority of dust particles created during breakage are not released into the air, but stay attached to the surface of the rock [Cheng and Zukovich 1973]. Wetting the broken rock ensures that the dust particles stay attached.
A key factor is the uniformity with which the rock is wetted [Hamilton and Knight 1957]. For example, in coal mining, releasing water near the cutting picks of rotating shearer drums is far more effective at suppressing longwall dust than external sprays on the shearer body, because the rotating drums act to mix the coal and the water. Increasing the number of sprays can also promote uniformity of wetting. For example, Bazzanella et al. [1986] showed that dust suppression is improved by increasing the number of sprays on a shearer drum, even when the total water flow and nozzle pressure were held constant by using smaller orifice nozzles. Increasing the number of nozzles on the drum from 17 to 46 lowered respirable dust by 60%. This is better than the dust reduction afforded by most other techniques.

The lessons from this knowledge are twofold. First, it is best to fully wet the material during the breakage process. This is when most mechanical mixing is likely to take place, and it ensures that the benefits will carry over to any downstream secondary handling operation. Because of this improved mixing, it is better to have an additional 30 gpm at the cutter head than to have 10 gpm at each of three conveyor transfer points downstream. Also, it gives more time for the water to soak in and the excess to drain away. Second, best uniformity of wetting is achieved by using more nozzles at lower flow rates and ensuring that the nozzles are aimed at the broken material rather than just wetting an adjacent metal or rock surface.

As little as 1% of moisture on dry rock significantly reduces dust. However, since it is hard to achieve a uniform application of such a low moisture level underground, the best moisture content might be as high as 5%. Whether this much water is always practical is another matter, so one should ensure that the water is being uniformly applied before automatically raising the flow rate. For instance, on a TBM, sprays located on the rotating head will be more effective than fixed sprays at the crown, and sprays aimed to intercept the falling muck will be more effective than those aimed at the uncut face. One way to improve the airborne capture of water sprays is to raise the pressure to 500 psi or more. However, a marked disadvantage of high-pressure sprays is that they entrain large volumes of air. This can lead to more dispersal of dust than is

captured. Because of this, their application is limited to enclosed or semienclosed spaces, such as the cutting head area of a TBM.

Aside from efforts to improve spray effectiveness, one of the most helpful actions a contractor can take is to provide some automatic feature that turns sprays on and off as needed. This allows sufficient wetting while helping to avoid the problems associated with overuse of water. If the dust standard is below 1 mg/m^3 because of silica, then spray water should be clean because the evaporation of dirty water can release dust from dissolved minerals. Frequent clogging of spray nozzles from particulates in the water line can also be a problem. In such cases, water line filtration can reduce clogging.

Control of drill dust. It is better to control drill dust at the source than to depend on ventilation to carry the dust cloud away. Drill dust controls can be particularly effective. The best method is to introduce water through a hollow drill stem [ILO 1965; Page 1982]. Less effective are water sprays at the collar of the hole and dry dust collectors that capture the dust cloud near the collar and filter it out [Page and Folk 1984]. Most failures of drill dust controls are readily found and corrected. Rather than mechanical breakdown of the controls, malfunctions generally result from oversights such as a failure to turn on water or to service clogged filters.

Control of conveyor dust. Conveyor belts can generate large amounts of dust. Methods to deal with belt dust are well known [Goldbeck and Marti 1996; Swinderman et al. 1997]. The following questions must be addressed if belt dust is high.

1. Are transfer points enclosed? A simple enclosure with a spray or two inside of it may be adequate. If this is not enough, the air inside must be exhausted to a dust collector or ventilation duct, with all of the leakage points on the enclosure sealed properly [Swinderman et al. 1997].

2. Is the material being conveyed adequately wet, but not so much that it leaves a sticky mud residue on the belt? When this residue dries, dust is released. Thus, an end result of excessive wetting can be an increase in belt dust.

3. Are the undersides of both the top and the bottom belts being wetted [Ford 1973] so that dust sticking to the belt is not shaken loose by the idlers? Does the belt stay wet or is it drying out and releasing dust?

4. Are the belt scrapers working properly? Is a second set of scrapers being used? Has a belt washing system been installed [Bennett and Roberts 1988; Stahura 1987]?

5. Is the belt running true and not spilling its contents [Swinderman et al. 1997]?

More information on conveyor belt dust control can be found in chapter 6 on hard-rock mines. See page 86.

Foam. The use of foams for dust control has been studied extensively in coal mines. Here, foam works better than water, providing dust reductions in the 20%-60% range compared to water. Foam also can produce similar results at lower water use. Seibel [1976] compared 15-20 gpm of high-expansion foam to 19 gpm of water at a belt transfer point. Compared to water, the foam averaged 30% more dust reduction. Mukherjee and Singh [1984] found that foam released from a longwall shearer drum cut the dust 50% compared to conventional sprays on the drum. Also, the system used only half the water. The drawback of foam is high cost.

The benefits of improved mixing and uniformity of wetting have also been obtained with foam. Foam effectiveness was far greater when it was mechanically mixed in with the coal [Mukherjee and Singh 1984] or silica sand [Volkwein et al. 1983]. Page and Volkwein [1986] have published a comprehensive review of foam for dust control in mining and minerals processing.

DESIGN STAGE VENTILATION PLANNING

- **The quantity of air needed for dust control**
- **Whether to use exhaust or blowing ventilation**

When tunnel excavation is underway, major ventilation upgrades are usually not practical. However, for tunnels in the design stage, sufficient airflow must be planned into the design. Ideally, ventilation systems should be designed to achieve 100 ft/min air velocity throughout the tunnel, including the TBM and its trailing gear. This 100 ft/min must be regarded as a minimum if the rock has over 10% of crystalline silica. For large-diameter tunnels, 60 ft/min is the minimum. Other considerations, such as dilution of methane gas or diesel fumes, may require higher velocities.

Whether to use exhaust or blowing ventilation is always a key issue. Within the region of the TBM and trailing gear, exhaust ventilation is best for dust control. When exhaust ventilation is used, the zone of low air movement between the ventilation and dust collector ducts (see figure 7-6) is avoided, and both systems work together to maximize fresh air delivery. Between the rear of the trailing gear and the portal, the main ventilation system could be either exhaust or blowing. If the main ventilation system is exhaust, then the ventilation and dust collector ducts from the trailing gear must feed directly into it. If the main system is blowing, then some overlap with the TBM trailing gear systems must be maintained, as shown in figure 7-3.

Ventilation estimates must consider a realistic estimate of air leakage in the ductwork. In planning a tunnel ventilation system, a duct leakage of 20%-50% can be expected. The most common mistake in ventilation system design is the failure to consider enough leakage. Contractors should avoid using flexible, spiral-wound ventilation duct for any purpose other than as a short connection between sections of rigid metal duct. The pressure drop in spiral-wound duct is very high compared to smooth metal duct.

Finally, designers of ventilation systems must also plan to extract a sufficient quantity of air from the cutter head area behind the dust shield in order to prevent dusty air from leaking out. Myran [1985] has given the following recommendations on the amount of air that should be extracted:

Tunnel diameter, ft	Airflow range, cfm
10	4,000-6,000
15	7,000-10,000
20	12,000-17,000
25	19,000-26,000

These airflows can be hard to achieve because they require large fans and ductwork, not to mention large dust collectors. Why such high airflow from what is presumably an enclosed space? First, the stirring action of the large rotating cutter head creates considerable source turbulence, which disrupts the normal inflow of air that acts to contain the dust. Second, there is far less enclosure of the cutter head than a casual inspection of a TBM would indicate. Depending on the TBM design, the entire belt conveyor access space can be wide open. Also, there is open space when the grippers at the head expand to press out against the tunnel walls. In addition to raising the airflow, dust reduction efforts have focused on reducing the open space available for the dust to leak out by enclosing the conveyor tunnel and by installing single or even double sets of rubber dust seals between the grippers and TBM body.

REFERENCES

Bazzanella A, Becker H, Kemper F [1986]. Staubbekampfung in abbaubetrieben mit schneidender kohlengewinning. Gluckauf *122*(11):728-735. Also available in translation as: Dust suppression in shearer faces, Gluckauf Translation *122*(11):204-207.

Bennett DJ, Roberts AW [1988]. Carry-back measurements to evaluate the design, selection, and performance of belt cleaning systems. Mechanical Engineering Transactions, The Institution of Engineers, Australia. Vol. ME13, No. 4, December, pp. 215-221.

Cheng L, Zukovich PP [1973]. Respirable dust adhering to run-of-face bituminous coals. Pittsburgh, PA: U.S. Department of the Interior, Bureau of Mines, RI 7765. NTIS No. PB 221-883.

Courtney WG, Cheng L [1977]. Control of respirable dust by improved water sprays. In: Respirable Dust Control – Proceedings of Technology Transfer Seminars, Pittsburgh, PA, and St. Louis, MO, IC 8753, pp. 92-108. NTIS No. PB 272 910.

Ford VHW [1973]. Bottom belt sprays as a method of dust control on conveyors. Min Technol (U.K.) *55*(635):387-391.

Goldbeck LJ, Marti AD [1996]. Dust control at conveyor transfer points: containment, suppression, and collection. Bulk Solids Handling *16*(3):367-372.

Hamilton RJ, Knight G [1957]. Laboratory experiments on dust suppression with broken coal. London, U.K.: National Coal Board, Mining Research Establishment Report No. 2083.

ILO [1965]. Guide to the prevention and suppression of dust in mining, tunnelling, and quarrying. Geneva, Switzerland: International Labour Organization.

Kissell FN [1996]. How to control air contaminants during tunnel construction. Pittsburgh, PA: U.S. Department of the Interior, Bureau of Mines, IC 9439. NTIS No. PB96-147558.

Mukherjee SK, Singh MM [1984]. New techniques for spraying dust. Coal Age *June*:54-56.

Myran T [1985]. Tunnel boring machines in Norway: ventilation and dust problems. In: Proceedings of the Second U.S. Mine Ventilation Symposium (Reno, NV).

Page SJ [1982]. An evaluation of three wet dust control techniques for face drills. Pittsburgh, PA: U.S. Department of the Interior, Bureau of Mines, RI 8596. NTIS No. PB82-177320.

Page SJ, Folk M [1984]. Keystone achieves positive dust control during dry drilling. Eng Min J *185*(9):84-85.

Page SJ, Volkwein JC [1986]. Foams for dust control. Eng Min J *187*(10):50-52, 54.

Seibel RJ [1976]. Dust control at a transfer point using foam and water sprays. Pittsburgh, PA: U.S. Department of the Interior, Bureau of Mines, TPR 97. NTIS No. PB-255-440.

Stahura RP [1987]. Conveyor belt washing: is this the ultimate solution? TIZ-Fachberichte *111*(11):768-771. ISSN 0170-0146.

Swinderman RT, Goldbeck LJ, Stahura RP, Marti A [1997]. Foundations 2: the pyramid approach to dust control and spillage from belt conveyors. Neponset, IL: Martin Engineering.

Volkwein JC, Cecala AB, Thimons ED [1983]. Use of foam for dust control in minerals processing. Pittsburgh, PA: U.S. Department of the Interior, Bureau of Mines, RI 8808. NTIS No. PB84-131184.

CHAPTER 8.—HOW TO FIND THE MAJOR DUST SOURCES

By Fred N. Kissell, Ph.D.,[77] and Jon C. Volkwein[1]

In This Chapter

- ✓ Instruments for measuring dust
- ✓ How to calculate the amount of dust from a source
- ✓ How to get a valid concentration measurement
- ✓ Sampling to assess control technology effectiveness

When there is more than one source of dust, sampling may be required to find which dust sources are most significant. Then, efforts to reduce dust can be concentrated where they will have the most impact.

This chapter explains how to perform dust source sampling. It describes two kinds of instruments that are available and discusses their limitations. It explains how environmental variables such as concentration gradients, dust dilution, and production changes can impact dust measurements. It also suggests practical ways to improve the validity of dust source measurements under adverse conditions, such as high-velocity airflow or the presence of water mist in the air.

Dust source sampling at coal mine longwalls and at tunnels is more complicated. Chapters 3 and 7 have more information on sampling in those circumstances.

TWO KINDS OF INSTRUMENTS FOR MEASURING DUST

Gravimetric samplers. The conventional gravimetric sampler is a good device for measuring dust because it is the instrument used for compliance measurements. This dust sampler consists of an air pump, a small cyclone that separates out the respirable size fraction of the dust cloud, and a filter to collect the respirable dust.

In coal mines, the Mine Safety and Health Administration (MSHA)-approved gravimetric sampler uses a 10-mm Dorr-Oliver cyclone operating at an airflow of 2.0 L/min [30 CFR[78] 74 (2002)]. A correction factor of 1.38 is applied to make the results consistent with the U.K. MRE sampler, the instrument on which the 2.0 mg/m^3 coal dust standard is based.

---

[77]Research physical scientist, Pittsburgh Research Laboratory, National Institute for Occupational Safety and Health, Pittsburgh, PA.
[78]*Code of Federal Regulations.* See CFR in references.

In noncoal mines, the gravimetric sampler uses a 10-mm Dorr Oliver cyclone operating at 1.7 L/min. No correction factor is applied, consistent with MSHA's metal/nonmetal regulations [30 CFR 57.5001 (2002)].

In tunnels under construction, Occupational Safety and Health Administration (OSHA) regulations [29 CFR 1910.1000 (2002)] apply, so any gravimetric sampler with an OSHA-approved cyclone operating at the recommended flow rate is satisfactory.

To get the best possible accuracy with gravimetric samplers, sampling pumps must be calibrated [MSHA 1999], the cyclones must be clean and the filters must be weighed accurately. For accurate filter weighing, the filters must be desiccated to remove moisture, and the weighing must be done in a temperature- and humidity-controlled room. Extra attention is required if the amount of silica is being measured. Page et al. [2001] found that when the dust mass on the filter is below 0.5 mg, the silica error climbs rapidly. In such cases, it may be necessary to sample with one filter for several shifts to accumulate sufficient mass on the filter.

Even when these precautionary steps are followed, gravimetric dust samplers do not give very precise results when used under field conditions. Recent testing [Kissell and Sacks 2002] has shown that the measured dust concentration has a relative standard deviation (RSD) averaging 12% when samplers are placed within a few inches of each other at a fixed site underground. Under poor sampling conditions, such as outside in the wind and rain, RSD values as high as 50% have been found for a filter mass as high as 3.5 mg [Page et al. 2001].

Direct-reading dust instruments. The most common direct-reading instruments measure dust using a light-scattering technique. These instruments are valuable for short-term relative comparisons, such as comparing dust levels with a fan turned on and then turned off or comparing dust levels at two adjacent locations. Direct-reading instruments can also discern if a background dust source will cloud data interpretation. However, since dust levels are constantly rising and falling as mining proceeds, multiple readings must always be taken to ensure that a representative dust level is being measured.

Dust concentration values from direct-reading instruments cannot be interpreted as absolute gravimetric values. Direct-reading instruments that use light scattering are too sensitive to shifts in the size distribution of the dust, as well as a host of other factors that cause errors [Williams and Timko 1984; Smith et al. 1987; Tsai et al. 1996]. In field use, when compared to gravimetric samplers, measurement errors of 100% in direct-reading dust instruments are not unusual [Page and Jankowski 1984]. These errors are especially high at concentrations under 0.5 mg/m^3.

Lastly, direct-reading dust instruments based on light scattering can be adversely affected by water mist in the air. Water mist causes them to show a dust level much higher than the actual level. Adding a mist eliminator designed by Cecala et al. [1985][79] can correct this problem. The

[79] A commercial version of the mist eliminator (Model 3062 Diffusion Dryer) is available from TSI, Inc., Shoreview, MN.

mist eliminator consists of a 24-in-long wire-mesh tube surrounded by calcium sulfate desiccant

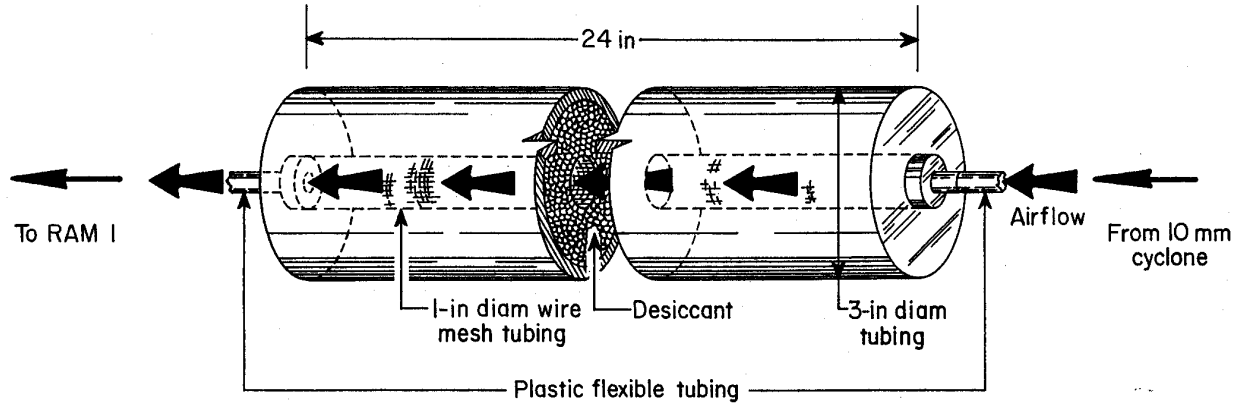

Figure 8-1.—Mist eliminator for direct-reading instruments that use light scattering [Cecala et al. 1985].

(figure 8-1). It is placed between the detector and the 10-mm cyclone used to preclassify the respirable size range and removes water mist without trapping dust.

The most useful direct-reading dust instruments collect a gravimetric filter sample along with an electronic record of the average light-scattering value. The users of such instruments can then make the comparisons needed to assess the validity of the light-scattering value.[80]

HOW TO CALCULATE THE AMOUNT OF DUST FROM A PARTICULAR SOURCE

Calculating the amount of dust from a particular source is not complicated. The dust concentrations upwind and downwind of the source are measured. Also, the volume of air passing the source is obtained by measuring the air velocity and cross-sectional area of the airway. The difference in the dust concentration values multiplied by the air volume gives the mass of dust generated by the source. This mass of dust can be calculated in terms of unit of time (mg/min) or unit of production (mg/ton), if production data are available [Volkwein 1979].

Another approach to calculating the amount of dust from a source is to turn the dust source on and off, if it is practical to do so. The dust concentration can be measured by a direct-reading instrument or by two packages of gravimetric samplers alternately turned on and off along with the dust source. The amount of dust produced by the source is then calculated from the difference in the readings. The problem is obtaining a valid concentration measurement.

[80]Currently, only one direct-reading sampler is approved for use in underground coal mines—the personal DataRAM made by Thermo Anderson, Smyrna, GA.

OBTAINING A VALID CONCENTRATION MEASUREMENT

Many environmental factors can invalidate dust source measurements.

To avoid sampling errors caused by environmental factors, review the following dust sampling checklist.

DUST SAMPLING CHECKLIST

1. Is there little to no airway concentration gradient?
2. Is the sampling location within 100 ft of the dust source?
3. Is there no air dilution between the dust source and the sampling location?
4. Is the air velocity past the source and past the sampling location at least 50 ft/min but not over 800 ft/min?
5. Is the type and amount of material mined during sampling representative of normal mining conditions?

If the answer to all of the above questions is "yes," then dust sampling may be done without further precautions other than keeping the instruments at least 3 ft above the mine floor.[81] If the answer to any question is "no" or "I don't know," then the following sampling precautions must be considered.

Checklist item No. 1: Sampling in airways with a concentration gradient. Many sampling locations have large concentration gradients. At such locations, the measured concentration changes as the sampler is moved. In fact, moving the sampler a foot one way or the other may change the dust concentration reading more than any other factor. For example, Kost and Saltsman [1977] showed that a gravimetric sampler located 3 ft in front of a continuous miner operator may indicate a respirable dust concentration twice that of the operator's, whereas only a few feet behind the operator the indicated concentration may be half. This reflects a concentration gradient observed by moving closer to or farther away from the dust source.

[81] People and passing equipment will kick up dust, making floor samples invalid.

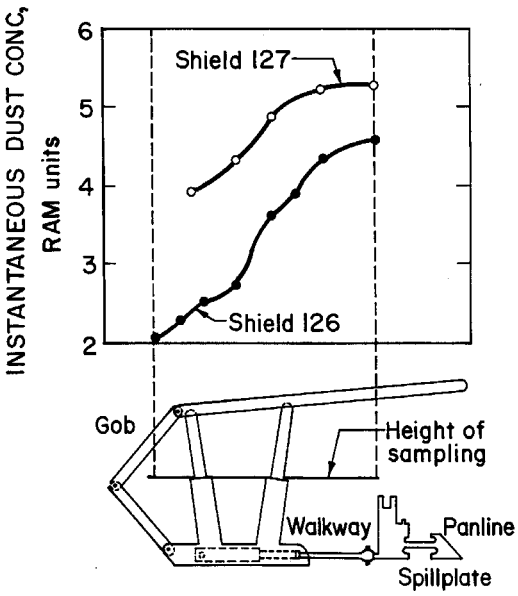

Figure 8-2.—Two gob-to-spillplate dust concentration gradients measured downwind of a longwall shearer [Kissell et al. 1986].

Other concentration gradients can be observed by moving from side to side in an airway. Such side-to-side concentration gradients exist because the dust cloud from the source has not fully mixed into the airstream.[82] The concentration gradient at longwall faces demonstrates this incomplete mixing. The disparity in concentrations depends on the distance between the source (the shearer) and sampling point. Figure 8-2 shows two cross-sectional concentration gradients measured at least 200 ft downwind of the shearer. Even at this distance, shearer dust, mainly in the panline and spillplate, has not dispersed equally into the walkway and area around the support legs.

Because concentration gradients are so common in underground operations, any sampling program to measure the amount of dust produced by a source should test for gradients first. This testing is accomplished by using a direct-reading instrument, moving it back and forth across the airway, or by using three or more gravimetric samplers spaced evenly across the airway. When concentration gradients are found, multiple samplers must be used to obtain valid results.

Checklist item No. 2: Sampling within 100 ft of the source to avoid dust deposition problems. A way to reduce the impact of dust gradients across mine entries might be to move farther downwind from the source so that the dust has more time to mix evenly into the airstream. However, this does not work in practice because turbulent deposition of dust particles causes a decrease in the concentration over relatively short distances. For example, in experiments on a 7-ft-high U.K. longwall face, Ford [1976] found that 45% of a 4-µm particle size dust cloud was deposited within a distance of 600 ft. At other longwalls where face heights were lower, deposition increased. In a U.S. study over a similar 600-ft distance in an uncluttered mine airway, Bhaskar et al. [1988] measured 38% deposition of respirable dust at air velocities over 300 ft/min and 67% deposition at an air velocity of 165 ft/min. Because of this high deposition rate, dust sampling aimed at calculating a source emission should be done within 100 ft of the source.

Checklist item No. 3: Sampling where air dilution has lowered the dust concentration. The validity of sampling results is also affected if the airstream being sampled is not representative of the dust source. For example, when sampling is done downwind of mining machines, the measured concentration is not always a reliable indicator of the amount of dust produced by that

[82] In some places, such as behind a coal mine line curtain, there may be a top-to-bottom gradient. Vertical gradients are likely when the air passage height is greater than the width, especially when the dust source releases heat.

machine. The intake air is likely to contain some dust even before it reaches the machine, so the amount of intake dust must also be measured and subtracted from the downwind measurement.

Also, if air is gained or lost between the source and sampling point, corrections must be made. Line curtain leakage (figure 8-3), a common occurrence on continuous miner faces, is an example of how air is gained, thereby diluting the dust level measured in the return. As the heading advances, the amount of air gained will increase; in fact, a leakage of 50% is common. To calculate a machine dust emission rate in this case, it is necessary to multiply the measured concentration by the airflow at the sampling point. Comparisons can then be made on the basis of dust weight per unit time or per ton of material mined.

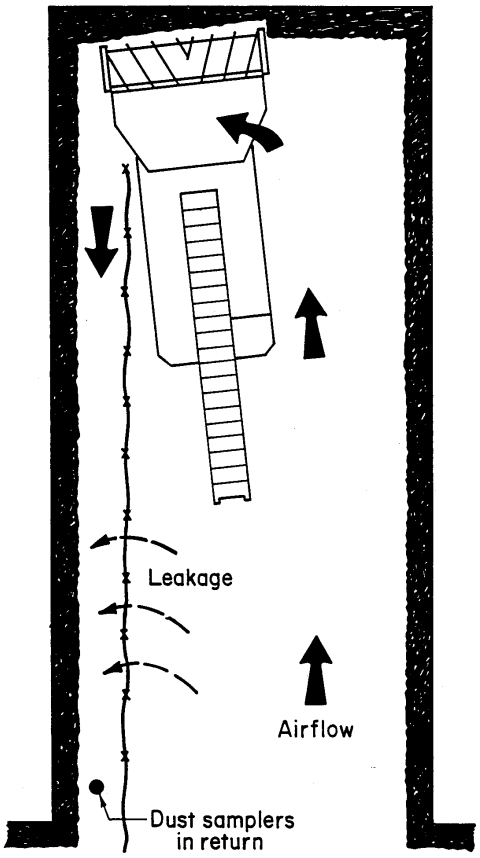

Figure 8-3.—Air in return diluted by line curtain leakage [Kissell et al. 1986].

If air is lost between the source and the sampling point, no change in dust concentration will occur. However, the machine emission rate cannot be calculated unless it is known exactly how much air was lost.

Checklist item No. 4: Sampling in a low-velocity airflow under 50 ft/min. In workplaces where the airflow is less than 50 ft/min, the magnitude of the source can be *roughly* assessed by moving a direct-reading instrument alternately toward and away from it. This movement must be repeated many times, preferably from different directions, to ensure that any observed increases in dust level result from getting closer to the source rather than from an extraneous factor, such as a change in production.

Checklist item No. 4: Sampling in high-velocity airflow over 800 ft/min. In air streams with velocities up to 300 ft/min, neither the air velocity nor the cyclone inlet orientation has any impact on the dust concentration measured by the sampler [Caplan et al. 1973]. However, at air velocities over 300 ft/min, both the air velocity and the cyclone inlet orientation have an impact. Cecala et al. [1983] found that when the Dorr-Oliver cyclone inlet[83] is pointed directly into the wind, it oversamples when the air velocity exceeds 800 ft/min. At 2,000 ft/min, it oversamples by 35%. When the cyclone inlet is at a right angle to the wind or pointed downwind, it undersamples when the air velocity exceeds 300 ft/min.

[83]Strictly speaking, it is the vortex finder clamp that is pointed directly into the wind. The inlet enters the cyclone at a slight angle.

Cecala et al. [1983] also tested a shielded cyclone to see if a shield would reduce the over- and undersampling. The shield was a 1-in-wide strip of aluminum sheet bent into a cylinder. This cylinder was then wrapped around the top of the cyclone and bolted to the hole in the back of the vortex finder clamp (figure 8-4). Testing showed that the shield successfully reduced both the over- and undersampling to within 14% of the true value up to the highest velocity tested (2,000 ft/min).

Another way to sample high-velocity airstreams is to use an isokinetic probe, in which the velocity of the air entering the probe is matched to that of the airstream [Quilliam 1994]. However, because the equipment is more specialized and less portable, isokinetic sampling is more suited to labs and industrial sites than underground mines.

Checklist item No. 5: Sampling during changes in the type of material cut and changes in production. In coal mines, cutting rock bands in the coal will cause a wide variation in dust levels. A rock band is a band of rock, typically shale, layered within the coal seam. The amount of dust generated by cutting the rock band is much greater than that from cutting the coal, so even a minor rock band will cause dust levels to increase substantially.

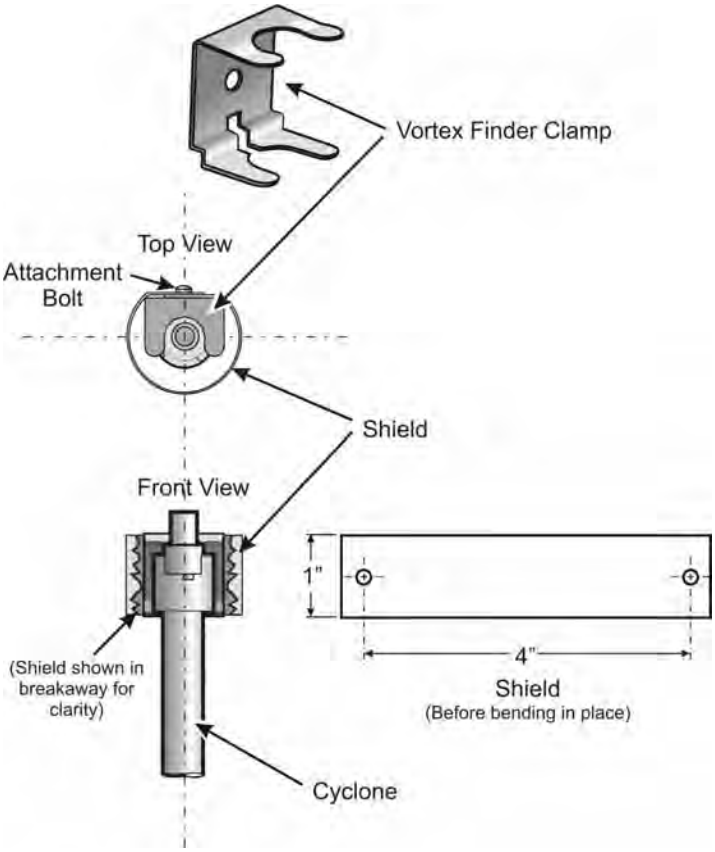

Variations in production also cause substantial dust level changes. Shift-to-shift changes in production by a factor of two are common in all types of mines. Dust concentration values may be corrected for shift production when production changes are due to incidents such as equipment breakdowns. In this case, a lower shift dust concentration is due to less mining time. However, if shift production is low because of hard cutting through rock, dust levels may be higher due to the rock itself. If the concentration level data are then corrected for production, the errors will be magnified greatly. The only course of action is to sample when the type and amount of material mined are representative of normal mining conditions.

Figure 8-4.—Cyclone shield for high-velocity air streams.

In-depth information on dust instrumentation and measurements can be obtained from Baron and Willeke [2001]. Raymond [1998] describes the equipment and procedures used by MSHA to maintain a modern dust sample weighing facility. Parobeck and Tomb [2000] describe MSHA procedures to measure the silica content of mine dust samples.

SAMPLING TO ASSESS CONTROL TECHNOLOGY EFFECTIVENESS

Most mine operators depend on compliance sampling to assess whether any control technology that they installed works as promised. Although the methods described above require more effort, they are a better way to measure control technology effectiveness simply because it is easier to measure a change in a dust source when that source is isolated from other dust sources. However, it pays to keep in mind that the relative standard deviation of gravimetric samplers under typical field conditions is 12%. Additional error is contributed by environmental variables such as production changes and concentration gradients. In addition to these errors, the evaluation of a dust control method is constrained by the combined error of measurements with and without controls. For these reasons, assessment of dust control effectiveness is limited to those technologies that give at least a 25% change in dust levels.

REFERENCES

Baron P, Willeke K [2001]. Aerosol measurement. New York: Wiley Interscience Publishers.

Bhaskar R, Ramani RV, Jankowski RA [1988]. Experimental studies on dust dispersion in mine airways. Min Eng 40(3):191-195.

Caplan KJ, Doemeny LJ, Sorenson S [1973]. Evaluation of coal mine dust personal sampler performance. U.S. Department of Health, Education, and Welfare contract PHCPE-R-70-0036

Cecala AB, Volkwein JC, Thimons ED [1985]. Adding steam to control dust in minerals processing. Pittsburgh, PA: U.S. Department of the Interior, Bureau of Mines, RI 8935. NTIS No. PB 85-198885.

Cecala AB, Volkwein JC, Timko RJ, Williams KL [1983]. Velocity and orientation effects on the 10-mm Dorr-Oliver cyclone. Pittsburgh, PA: U.S. Department of the Interior, Bureau of Mines, RI 8764. NTIS No. PB 83-214387.

CFR. Code of Federal regulations. Washington, DC: U.S. Government Printing Office, Office of the Federal Register.

Ford VHW [1976]. Investigations into the deposition of airborne respirable dust along underground airways. Mining Research and Development Establishment (MRDE) Report No. 65. National Coal Board, U.K.

Kissell FN, Sacks HK [2002]. Inaccuracy of area sampling for measuring the dust exposure of mining machine operators in coal mines. Min Eng *54*(2):33-39.

Kissell FN, Ruggieri SK, Jankowski RA [1986]. How to improve the accuracy of coal mine dust sampling. AIHA J *47*(10):602-606.

Kost JA, Saltsman RD [1977]. Evaluation of the respirable dust area-sampling concept as related to the continuous miner operator. Bituminous Coal Research, Inc., Report L-792.

MSHA [1999]. Calibration and maintenance procedures for coal mine respirable dust samplers. Arlington, VA: U.S. Department of Labor, Mine Safety and Health Administration, IR 1240.

Page SJ, Jankowski RA [1984]. Correlations between measurements with RAM-1 and gravimetric samplers on longwall shearer faces. AIHA J 45(9):610-616.

Page SJ, Organiscak JA, Mal T [2001]. The effects of low quartz mass loading and spatial variability on the quartz analysis of surface coal mine dust samples. Appl Occup Environ Hyg *16*(9):910-923.

Parobeck PS, Tomb TF [2000]. MSHA's programs to quantify the crystalline silica content of respirable mine dust samples. SME preprint 00-159. Littleton, CO: Society for Mining, Metallurgy, and Exploration, Inc.

Quilliam JH [1994]. Isokinetic sampling. J Mine Vent Soc S Afr *10*(7):153.

Raymond LD [1998]. Coal mine dust sample processing. Arlington, VA: U.S. Department of Labor, Mine Safety and Health Administration, IR 1249.

Smith JP, Baron PA, Murdock DJ [1987]. Response characteristics of scattered light aerosol sensors used for control monitoring. AIHA J *48*(3):219-229.

Tsai CJ, Shih TS, Lin JD [1996]. Laboratory testing of three direct-reading dust monitors. AIHA J *57*:557-563.

Volkwein JC [1979]. Dust control in bagging operations. In: Industrial Hygiene for Mining and Tunneling – Proceedings of a Topical Symposium. Cincinnati, OH: American Conference of Governmental Industrial Hygienists.

Williams KL, Timko RJ [1984]. Performance evaluation of a real-time aerosol monitor. Pittsburgh, PA: U.S. Department of the Interior, Bureau of Mines, IC 8968. NTIS PB 84-199710.

CHAPTER 9.—DUST RESPIRATORS IN MINES AND TUNNELS

By Fred N. Kissell, Ph.D.,[84] and William A. Hoffman[85]

In This Chapter

- ✓ MSHA regulations for coal mines
- ✓ MSHA regulations for metal/nonmetal mines
- ✓ OSHA regulations for tunnel construction
- ✓ Types of respirators used in mines and tunnels
- ✓ Filter materials and filter efficiencies
- ✓ Donning, seal checking, and maintenance
- ✓ Filter service life

and

- ✓ Respirator information resources

In many cases, engineering controls are not adequate to achieve satisfactory dust levels, so respirators must be used. This chapter explains the Federal regulations governing the use of dust respirators in mines and tunnels and describes the most common dust respirators used. Filter materials and filter efficiencies for respirators are discussed. This chapter also gives some guidelines for respirator use and recommends sources for more dust respirator information. Respirator effectiveness in reducing dust exposure usually exceeds the effectiveness of most engineering control methods.

RESPIRATOR REGULATIONS

Different regulations govern respirator use in coal mines, metal/nonmetal mines, and tunnels under construction.

Coal mines under Mine Safety and Health Administration (MSHA) jurisdiction. Coal mine operators are required to meet dust standards using only engineering control methods. Typical engineering control methods include ventilation and water sprays. Respirators are not regarded as an engineering control method, so respirators cannot be used in lieu of engineering controls.

---

[84]Research physical scientist, Pittsburgh Research Laboratory, National Institute for Occupational Safety and Health, Pittsburgh, PA.

[85]Physical scientist, National Personal Protective Technology Laboratory, National Institute for Occupational Safety and Health, Pittsburgh, PA.

However, if dust levels exceed the 2.0 mg/m^3 coal dust standard,[86] approved respirators must be made available[87] to workers [30 CFR[88] 70.300] while new engineering controls are being instituted. Respirators must also be provided to workers exposed to high-inhalation hazards for short periods.[89]

Coal mine operators may also choose to establish a respiratory protection program, as set forth by the American National Standards Institute (ANSI Z-88.2-1969)[90] [ANSI 1969; 30 CFR 72.710]. Such programs must include written procedures containing provisions for training, fit-testing, maintenance, recordkeeping, and a requirement that users be clean-shaven [MSHA 1995]. According to MSHA, if there is a respiratory protection program, the existence of such a program may form the basis for further extensions of abatement times or help to create an argument that a violation is less serious. However, a program will not prevent the issuance of citations for exceeding the dust standard.

Metal/nonmetal mines under MSHA jurisdiction. MSHA metal/nonmetal regulations are somewhat less restrictive than the coal regulations. Removal of dust by engineering controls remains the required method. However, when accepted engineering control measures have not been developed or when the dust standard is exceeded on an occasional basis, respiratory equipment may be used without a citation being issued, provided that all of the following requirements are met:

1. The respirators used must be approved by NIOSH under 42 CFR 84.
2. A respiratory protection program, as set forth by ANSI Z-88.2-1969 [ANSI 1969], is or has been instituted [30 CFR 56.5005; 30 CFR 57.5005].
3. When respiratory protection is used in atmospheres immediately dangerous to life, a second worker with backup equipment and rescue capability is required.

Tunnels under Occupational Safety and Health Administration (OSHA) jurisdiction. Under OSHA, engineering controls are also the required method of dealing with dust. However, OSHA regulations permit respirators to be used in place of engineering controls if engineering controls are not feasible or while engineering controls are being instituted [29 CFR 1910.134(a)(1)].

If respirators are used, a respiratory program is required to ensure that respirators are used properly and employees are protected [29 CFR 1910.134(c)]. This program has several required elements. The major ones are [OSHA 1998a]:

---

[86] If the coal contains silica, the standard is lowered according to a formula prescribed by MSHA.
[87] Operators must also maintain a supply of respirators consistent with this need.
[88] *Code of Federal Regulations.* See CFR in references.
[89] In the MSHA program policy manual, the term “short periods” is interpreted as the time required to drill three or four holes for trolley hangers, to drill shot holes in a roof fall, etc.
[90] The current version is ANZI-88.2-1992, but the MSHA regulations are based on the 1969 version.

1. A worksite-specific document explaining the respiratory protection program.
2. Selection of a designated administrator who is qualified to oversee the program.
3. A medical evaluation to determine the employee's ability to use a respirator.
4. Fit-testing of respirators to ensure minimal leakage.
5. Training in respirator use and care, particularly "user seal checks" by the wearer.

The OSHA "Voluntary Use" Program. For workplaces that are in compliance with dust standards, employers can permit their workers to wear air-purifying respirators under a "voluntary use" arrangement if they choose to do so [29 CFR 1910.134(c)(2)]. In this case, a program document, a medical evaluation, and respirator maintenance are all still required. No training is required [OSHA 1998b], but employees must be provided with advisory information [29 CFR 1910.134 appendix D]. Fit-testing is not necessary [OSHA 1998c], and less experience is required of the program administrator.

Some of the voluntary use program requirements (program document, medical evaluation, and respirator maintenance) do not apply to workers who voluntarily use dust masks [OSHA 1998b]. However, users of dust masks must be provided with the advisory information in 29 CFR 1910.134 appendix D.

TYPES OF RESPIRATORS USED IN MINES AND TUNNELS

Mine operators usually choose half-mask respirators, dust masks, or air helmets equipped with particulate filters.[91] Half-mask respirators and dust masks are convenient for confined surroundings. Air helmets are suitable when more space is available, such as at longwall faces in high coal.

Half-mask replaceable-filter respirators. Half-mask replaceable-filter respirators (figure 9-1), also known as reusable half-masks, consist of a filter-holding unit, fabricated from molded plastic or rubber, that contains intake and exhaust valves. Soft rubber is used to form a facepiece around the filter-holding unit, which forms a seal against the wearer's face. This seal prevents dust-laden air from bypassing the filter as the user inhales. *If* the facepiece seal is leak-tight, the respirator should remove 90% or more of the respirable dust.

[91] All must be NIOSH-approved under the requirements of 42 CFR 84. The half-mask replaceable filter respirators and the dust masks are classified as "air-purifying respirators" (APRs); the air helmet is classified as a "powered air-purifying respirator" (PAPR) because it is powered by a small fan.

Although the half-mask replaceable-filter respirators do a reasonable job of dust removal when the facepiece seal is leak-tight, the seal can occasionally cause skin irritation. These respirators also interfere with conversation and may interfere with eyeglasses or goggles.

Figure 9-1.—Half-mask replaceable-filter respirator.

Many different types of filter materials are available for half-mask respirators. Some filter materials are degraded by oil mist. The replaceable filter cartridges are designated according to their level of oil resistance, as follows:

Type **N** filters are **N**ot resistant to oil;
Type **R** filters are oil-**R**esistant up to one shift; and
Type **P** filters are oil-**P**roof.

For coal dust or for mineral dusts such as silica, any of these types of filters is satisfactory. Some mines have oil mist sources; the most common are percussion drills. These mines should use type R or type P filters.

The dust (or mist) collection efficiency of filter materials also varies; the efficiency is specified along with the oil resistance. Filter cartridges are available in three efficiency levels: 95%, 99%, and 99.97%, designated as 95, 99, and 100. For example, an N95 filter is 95% efficient; an N100 filter is 99.97% efficient.

Actually, filter efficiencies for respirable dust are much higher than the specified filter efficiency. This is because the specified filter efficiencies are measured using the size of particles that are most likely to get through the filters—about 0.3 µm in diameter. Most respirable dust is larger than this, which makes it easier to filter. Thus, a filter that is 95% efficient for 0.3 µm particles will exhibit a much greater efficiency for respirable dust.

The most commonly purchased filter types are N95s and P100s. Type 95 filters usually have a lower cost and lower breathing resistance than type 100 filters.

While filter efficiencies may be very high, it does not follow that workers are protected with the same degree of efficiency.[92] For instance, the rule-of-thumb efficiency for half-mask respirators is 90% for respirators that give a good fit. This is lower than the filter efficiency because some leakage at the seal against the wearer's face usually occurs. For example, during one respirator

[92]Keep in mind that efficiency numbers quoted in respirator catalogs only refer to filter efficiency.

evaluation program [Cole 1984], half-mask respirators were tested on four longwall sections. The dust exposure of workers was reduced by 92%.

Figure 9-2.—Dust mask, also called a filtering facepiece.

Dust masks. Dust masks (also known as filtering facepiece respirators) (figure 9-2) have a lighter and simpler design than half-mask respirators. The entire mask is fabricated from filter material and covers the mouth and nose, similar to a surgical mask. Dust masks offer some advantages compared to the replaceable-filter respirators. In particular, they are more comfortable and require no maintenance. However, dust masks usually do not form as tight a seal against the wearer's face as half-masks with soft rubber seals, which allows more leakage. As a result, they are often much less effective than half-masks.

Dust masks are certified by NIOSH under the 42 CFR 84 respirator certification tests. These standards only require a test of the filter material and do not assess how well the mask seals against the wearer's face. As a result, this certification is no guarantee that the mask will perform well. In a recent study of dust masks [CDC 1998], the average dust reduction was only 67%.[93]

In the mining industry, half-mask respirators are used far more than dust masks because their dust reduction efficiencies are much higher.

Air helmets. The air helmet (figure 9-3) is a redesigned hard hat equipped with a battery-powered fan, filtering system, and face visor, thus providing protection for the head, lungs, and

[93]The study got much better results after fit-testing was performed, and individuals who failed the fit-test were dropped from the study. The authors of the study then concluded that fit-testing was necessary if dust masks were to be used. Nevertheless, any organization that goes to the trouble and expense of fit-testing its workers is better off with half-mask replaceable-filter respirators.

The 67% figure for dust masks is low compared to other types of respirators, but it is still better than the dust reduction produced by many engineering controls.

eyes within one unit. Other advantages are a lack of breathing resistance, the ability to accommodate facial hair, and no fit-testing requirement for their use.

Figure 9-3.—Air helmet.

Although air helmets are slightly larger and heavier than conventional hard hats (they typically weigh about 3 lb), wearer acceptance has been favorable in high coal seams (particularly at longwalls) and in many hard-rock mines.

A small fan is mounted in the rear of the helmet to draw dust-laden air through a filtering system. The filtered air is directed behind a full-face visor and over the wearer's face. Exhaled air and excess clean air exit the helmet at the bottom of the face visor. Face seals are provided along both sides of the visor to limit contamination from outside air. The fan is externally powered by a rechargeable battery worn on the miner's belt. Filter life varies from one to eight shifts depending on the dust level at the worksite [Parobeck et al. 1989].

The effectiveness of the air helmet depends in part on the mine air velocity outside of the helmet and the direction of air impact on the helmet [Cecala et al. 1981], because high air velocities push dust particles past the face seals. For example, at a longwall face with an air velocity of less than 400 ft/min, air helmets reduced respirable dust by an average of 84%. However, at another longwall with an air velocity of 1,200 ft/min, the air helmet was not as effective; dust reduction averaged 49%. In both cases, the sampling included some periods when the face visor was raised. Raising the visor reduces the helmet's effectiveness.

RESPIRATORS FOR DIESEL EXHAUST

Diesel exhaust, both the particulate and the organic vapors, have become more of a concern in recent years. Half-mask respirators will filter both the diesel particulate and the organic vapors when equipped with the proper cartridge or cartridge combination. A common cartridge designnation is Organic Vapor/P100, or OV/P100. Half-mask respirators will not protect the eyes from irritating fumes. Eye-irritating fumes are best handled by installing a catalytic converter on the engine [Schnakenberg and Bugarski 2002].

DONNING, SEAL CHECKING, AND MAINTENANCE

When putting on the respirator, the wearer should follow the manufacturer's instructions. Comfort is as important as a tight seal. The wearer may need to try different size respirators or

respirators from different manufacturers before finding one that conforms to his or her facial structure.

Once a respirator is donned, a seal check is necessary to ensure there are no leaks that would degrade the respirator's effectiveness. Either the positive- or negative-pressure check described below[94] or the respirator manufacturer's recommended user seal check method must be performed.

Seal checking is important for a respirator to be effective.

Positive-pressure seal check. To perform a positive-pressure seal check, the wearer closes off the exhalation valve and blows gently into the facepiece. The face fit is satisfactory if a slight positive pressure can be built up inside the facepiece without any evidence of outward leakage of air at the seal. For most respirators, this method of leak testing requires the wearer to first remove the exhalation valve cover before closing off the exhalation valve.

Negative-pressure seal check. To perform a negative-pressure seal check, the wearer closes off the inlet opening of the canister or cartridge by covering it with the palm of the hand or by replacing the filter seal. Next, the wearer inhales gently so that the facepiece collapses slightly, then the breath is held for 10 sec. If the facepiece remains in its slightly collapsed condition and no inward leakage of air is detected, the tightness of the respirator is satisfactory. However, the inlet opening of some filter cartridges cannot be sealed with the palm of the hand. In such cases, the test can be done by covering the inlet opening of the cartridge with a thin latex glove.

During the seal check, the respirator wearer should pay the most attention to the region around his or her nose because it is the most likely place for leaks. Also, there should be no interference with eyeglasses.

Respirator maintenance. Basic respirator maintenance is simple. The wearer should check to ensure that the filter cartridges are undamaged, the inhalation and exhalation valves are in working order, no straps are slipping or broken, there are no tears or deformities in the facepiece, and the respirator is reasonably clean.

FILTER SERVICE LIFE

Regular replacement of filters is an important part of respirator use [NIOSH 1997]. Normally, filters should be replaced when breathing resistance increases. Another approach is to replace filters when the filter loading reaches 200 mg of dust. Using this filter loading approach, if a

[94] From OSHA regulations at 29 CFR 1910.134 appendix B-1: User Seal Check Procedures.

worker breathes 10 m^3 per shift and the dust concentration is 5 mg/m^3, the loading is 50 mg per shift, or 25 mg per filter if there are two filters. The two filters would then be good for eight shifts.
If oil mist is present, N-series filters should not be used. R-series filters should be used for one shift, and P-series filters should be changed in accordance with the manufacturer's recommendations.

RESPIRATOR RESOURCES

Many organizations on the Internet are good sources of information on respirators and respiratory protection programs.

NIOSH has respirator publications at www.cdc.gov/niosh/respinfo.html. The two most useful are the *NIOSH Guide to the Selection and Use of Particulate Respirators Certified Under 42 CFR 84* [NIOSH 1996] at www.cdc.gov/niosh/userguid.html and the *NIOSH Guide to Industrial Respiratory Protection* [Bollinger and Schutz 1987] at www.cdc.gov/niosh/87-116.html.

OSHA has a downloadable *Small Entity Compliance Guide for the Revised Respiratory Protection Standard* at www.osha.gov/Publications/secgrev-current.pdf. Also, OSHA has a series of photographs that can be used for training at www.osha.gov/RespiratorOutreach/Powerpoint/Html/RespStd/sld001.htm.

The International Safety Equipment Association provides a useful buyer's guide at www.safetyequipment.org. The International Society for Respiratory Protection (www.isrp.com.au) provides information on respiratory protection. The society publishes a quarterly journal and convenes periodic conferences.

In addition to publications on the Internet, the American Conference of Governmental Industrial Hygienists (www.acgih.org) sells a *Respiratory Protection Program and Record Keeping Kit* as publication No. 9278CB. The American Industrial Hygiene Association (www.aiha.org) sells *Respiratory Protection: A Manual and Guideline* as stock No. 439-PC-01.

Respirator fit-testing and other respirator-related services are readily available for hire.

REFERENCES

ANSI [1969]. ANSI Z-88.2-1969: Practices for respiratory protection. Triangle Park, NC: American National Standards Institute. Available from Global Engineering Documents, Englewood, CO.

Bollinger NJ, Schutz RH [1987]. NIOSH guide to industrial respiratory protection. Cincinnati, OH: U.S. Department of Health and Human Services, Public Health Service, Centers for Disease Control and Prevention, National Institute for Occupational Safety and Health, DHHS (NIOSH) Publication No. 87-116. Available at www.cdc.gov/niosh/87-116.html.
CDC (Centers for Disease Control and Prevention) [1998]. Laboratory performance evaluation of N95 filtering facepiece respirators, 1996. MMWR *47*(48):1045-1049.

Cecala AB, Volkwein JC, Thimons ED, Urban CW [1981]. Protection factors of the airstream helmet. Pittsburgh, PA: U.S. Department of the Interior, Bureau of Mines, RI 8591. NTIS No. PB 82-135575.

CFR. Code of Federal regulations. Washington, DC: U.S. Government Printing Office, Office of the Federal Register.

Cole DE [1984]. Longwall dust control: respirators. In: Proceedings of the Coal Mine Dust Conference (Morgantown, WV, Oct. 8-10, 1984), pp. 61-64.

MSHA [1995]. Program information bulletin No. P95-3. Available at www.msha.gov/regs/complian/pib/1995/pib95%2D03.htm.

NIOSH [1996]. NIOSH guide to the selection and use of particulate respirators certified under 42 CFR 84. Cincinnati, OH: U.S. Department of Health and Human Services, Public Health Service, Centers for Disease Control and Prevention, National Institute for Occupational Safety and Health, DHHS (NIOSH) Publication No. 96-101. Available at www.cdc.gov/niosh/userguid.html.

NIOSH [1997]. NIOSH respirator user notice, May 2, 1997. Available at www.cdc.gov/niosh/respupdt.html.

OSHA [1998a]. Small entity compliance guide for the revised respiratory protection standard. Section (c): Respiratory protection program. Washington, DC: U.S. Department of Labor, Occupational Safety and Health Administration. Available at www.osha.gov/Publications/secgrev-current.pdf.

OSHA [1998b]. Small entity compliance guide for the revised respiratory protection standard. Section (c)(2): Voluntary respirator use. Washington, DC: U.S. Department of Labor, Occupational Safety and Health Administration. Available at www.osha.gov/Publications/secgrev-current.pdf.

OSHA [1998c]. Small entity compliance guide for the revised respiratory protection standard. Section (f)(1): Respirators that require fit testing. Washington, DC: U.S. Department of Labor, Occupational Safety and Health Administration. Available at www.osha.gov/Publications/secgrev-current.pdf.

Parobeck PS, Francart WJ, Ondrey RS, Stoltz RT, Atchison DJ, Gerbec EJ [1989]. Application of the Racal airstream helmet in four underground coal mines. Appl Ind Hyg *4*(5):126-133.

Schnakenberg GH Jr., Bugarski AD [2002]. Review of technology available to the underground mining industry for control of diesel emissions. Pittsburgh, PA: U.S. Department of Health and Human Services, Public Health Service, Centers for Disease Control and Prevention, National Institute for Occupational Safety and Health, DHHS (NIOSH) Publication No. 2002-154, IC 9462.

INDEX

A

Accuracy of samplers 110
Air entrainment by sprays..... 9-11, 33, 42-43
Air helmets 123-124
Airborne capture 8-10
Antirollback spray system 33
Atomized sprays 10
Automation 49
Avoidance of dust 6

B

Belt dust 86-88
Belt scrapers 86
Belt transfer point 6, 88-89
Belt washing 87
Bit replacement 34
Blasting dust 58, 85-86
Blowing duct 27
Blowing ventilation 26-28
Bolter dust 34
Bolter dust collector 34-36

C

Cab filtration 77
Cab floors 77-78
Cab protection factor 77
Cabs, enclosed 76-78
Cabs, older 77
Calcium chloride 78-79
Chemical suppressants 79
Chlorides 78-79
Clogged sprays 46
Continuous miner dust control 23-38
Conveyor belts 86-88
  scrapers 86
  washing systems 87
Crushers 58-60, 89-90
Crystalline silica 12
Cutting bits 34

D

Damage-resistant brattice 68-69
Design stage planning for tunnels 105-106
Diesel particulate control 60-61
Dilution ventilation 4
Direct-reading instruments 110-111
Displacement ventilation 4
Dorr-Oliver cyclone 109-110
Drill deck shroud 74-76
Drill dust 58, 73-76, 85
Drum sprays 49-50
Dry collection 12, 14, 74-76
Dust avoidance 6
Dust collectors 12-13, 23
  efficiency 24
  filtration efficiency 25
  inlet capture efficiency 24
Dust deposition 113
Dust dilution 113-114
Dust masks 123
Dust respirators 119-127
Dust source confinement 5-6
Dust source turbulence 5-6
Dust, blasting 58, 85-86
Dust, generated 13-15
Dust-hog bits 35

E

Electrically charged atomized sprays 10
Enclosed cabs 76-78
Enclosed operator booth 59
Evaporation of fine droplets 10
Exhaust ventilation 29-31

F

Face partition 50
Facepiece seal, respirator 121-123
Filter efficiency 25
Filter materials, respirator 122
Filter panel 24-25
Filtration of water 33-34
Finding dust sources 39
Fit-testing 120-121
Flat fan sprays 10
Flooded-bed panel 24-25
Foam 11, 50
Fog sprays 10

G

Gob curtain 44

H

Half-curtain 6, 30-31
Half-mask respirators 121-122

Hard-rock mines 83-96
Hard-rock tunnels 97-108
Haul road dust control 78-80
High-pressure sprays 11
High-velocity air, sampling in 114-115
Homotropal ventilation.....51

I

Infusion of coal seams 50-51
Inlet capture efficiency 12, 24-25
Instrumentation..... 109-111
Intake dust 44
Isokinetic sampling.....115

J

Jet fan placement 62-67

L

Light-scattering dust monitor 110-111
Limestone mines..... 57-72
Longwall dust control..... 39-55
Longwall shields..... 47-48
Low airflow, sampling in.....114

M

Maintenance 23, 25, 83
Methane gas.....27, 91
Mismatched airflow directions 101
Modified cutting cycle.....32
Muckpile stoppings.....68

N

Nozzle pressure, measuring.....33

O

Ore pass dust control 84-85
Overspray 33

P

Pinpointing dust sources..... 39-41
Placement of dust samplers 111-115
Propeller fans.....70

R

Remote control 26-29, 32, 43, 92
Remote operator location..... 26-29
Respirators
  filters.....122
  maintenance..... 124-126
  regulations 119-121
  resources 126
  seal check.....125
  use..... 119-126
Respiratory protection program..... 119-121
Roadheaders 91-93
Rollback.....5, 33
Roof bolters 34

S

Salts 78-79
Samplers 109-111
Sampling..... 109-117
  concentration gradient 112-113
  direct reading 110-111
  gravimetric..... 109-110
  in low-velocity air.....114
  in high-velocity air..... 114-115
  to assess technology effectiveness.....116
  to avoid deposition.....113
Scavenger systems..... 100-101
Scrubbers – see *Dust collectors*
Seal check, respirator.....125
Shank-type bits 35
Sharp cutting bits 46
Shearer concentration profile.....45
Shearer dust 39
Shearer-clearer system.....45
Shielded cyclone..... 114-115
Shroud for surface drills
  circular..... 75-76
  drill deck 74-75
Silica 12
Silt 80
Soil cements..... 78-79
Solid-stream (jet) sprays 50
Source of dust 39, 109
Spiral-wound duct.....105
Sprays
  atomizing 10
  capture efficiency 10
  charged 10
  clogging 10
  fog.....10
  high-pressure 11
  low-pressure 33, 92
  nozzles 10-11
  number of.....8, 42
Stageloader/crusher dust.....43
Stone mines 57-72
Stoppings
  brattice and wire mesh 68
  damage-resistant brattice 68-69
  leakage.....70
  muckpile 68
  pipe and sheeting 68

Support dust 47-48
Surface mines 73-82

T

Transfer points 6, 88-89
Tunnels 97-106

U

Unidirectional cutting 47
Uniformity of wetting 8

V

Ventilation
dilution 4
displacement 4
Voluntary use, respirators 121

W

Water curtain 9
Water filtration 33-34
Water infusion 50-51
Water proportioning 51
Water spray, air entrainment – See *Air entrainment by sprays*
Water sprays – see *Sprays*
Wet drilling 73
Wetting agents 12
Wetting, uniformity of 7-8
Wing curtain 48-49