SME Annual Meeting
February 28 – March 3, 2010, Phoenix, AZ

Preprint 10-209

IMPROVMENTS IN CONVEYOR BELT FIRE SUPPRESSION SYSTEMS FOR U.S. COAL MINES

Kara A. Teacoach, NIOSH, Pittsburgh, PA, USA

James H. Rowland, NIOSH, Pittsburgh, PA, USA

Alex C. Smith, NIOSH, Pittsburgh, PA, USA

Abstract

Current regulations for fire suppression systems in underground coal mines to protect conveyor belt installations have been in place since the Coal Mine Health and Safety Act of 1969 was enacted. Over time, the coal conveyer equipment being used and ventilation conditions underground have changed significantly, particularly the width of the conveyor belts and the use of belt air at the face. The effect of these new conditions on the effectiveness of suppression systems during a fire is not known. The National Institute of Occupational Safety and Health (NIOSH) conducted a study to evaluate the effect of air velocity, water sprinkler activation temperature, and a limited water application time on the effectiveness of water sprinkler fire suppression systems to extinguish large-scale conveyor belt fires.

The fire tests were conducted using both new and used 1.8-m-wide, fire-resistant rubber belt that met the Mine Safety and Health Administration (MSHA) flame resistant requirement specified in Title 30, Code of Federal Regulations, part 18, section 18.65 (also known as the 2G test). Tests were conducted using standard response sprinklers with activation temperatures of 68 °C and 141 °C at air velocities of 0.5 and 5.1 m/s. Two tests were conducted at both air velocities for each sprinkler activation temperature, one using a new belt and one with a used belt.

The results showed that the suppression system was able to suppress the fires in ten minutes to the point that a miner could extinguish it with a fire hose. However, in several of the tests, the fire reestablished itself a few minutes after the sprinkler water supply was cut off and quickly grew out of control. This report discusses the large scale experimental configuration, the installation specifications of the fire suppression system, and the results and conclusions regarding the effect of air velocity, sprinkler activation temperature, and limited water application on the suppression system performance.

Disclaimer: the findings and conclusions in this report are those of the authors and do not necessarily represent the views of NIOSH.

Introduction

Fire Suppression systems are the first line of defense after a conveyor belt fire has started in an underground coal mine. Between 2000 and 2009, twenty-five fires in underground coal mines were caused by friction of conveyor belts against pulleys, drives, rollers, idlers, and bearings (MSHA). These fires were often not detected for long periods of time after ignition, making manual fire fighting difficult or impossible. The success of the suppression system in extinguishing or controlling the fire is extremely important in preventing injuries and fatalities to miners, as well as preventing extensive damage and disruption to the mining operation.

When water sprinkler systems are used in underground coal mines, they must be installed in accordance with The U.S. Code of Federal Regulations (30 CFR 75.1101-7, 75-1107-8, and 75.1103-9(d)). These standards provide specifications on sprinkler type, location, and water discharge requirements. However, these systems are designed and installed according to guidelines for aboveground installations where no ventilation airflow exists. In addition, these standards were developed when the typical width of belts used in underground mines was 1.07 m, or narrower. Currently, many mines with multiple mining sections have gone to main line belts of 1.8 m width and some are even

Copyright © 2010 by SME

considering the move to 2.44-m-wide main line belts. With the use of wider belts and belt air at the working face, research is needed to evaluate the effect of these wider belts and ventilation on system effectiveness. Belt air used to ventilate the working section or areas where mechanized mining equipment is being installed or removed must be at a velocity no lower than 0.5 m/s and no greater than 5.1 m/s (30 CFR 75.350). Experiments testing the performance of automatic sprinkler systems for extinguishing incipient and propagating belt fires under ventilated conditions were performed by Smith, et al, in 1995. The study utilized 1.07-m-wide styrene butadiene rubber conveyor belts (SBR) at airflows of 1.1 m/s and 4.1 m/s. The sprinklers were able to extinguish the incipient fires, with improved performance at the lower air flow. The sprinklers were also successful in controlling propagating fires up to 10.8 megawatts (MW), activating earlier at lower velocities resulting in less damage to the belting.

Recently, MSHA and NIOSH collaborated on a research project to evaluate the effect high air velocity has on the ability of different types of fire suppression systems to extinguish conveyor belt fires (Rowland, 2009). Four different fire suppression systems were tested in the NIOSH Fire Suppression Facility (FSF); water sprinkler, deluge water spray, and two different types of dry chemical fire suppression systems. The large-scale fire tests were conducted using 1.8-m-wide fire-resistant SBR belt. Fire suppression tests were conducted at low (2.5 – 2.8 m/s) and high (6.6 – 7.6 m/s) air velocities. Both of the water-based systems and one of the dry chemical fire suppression systems were able to suppress the fire to the point that a miner could extinguish it with a fire extinguisher. However, the water-based systems were allowed to run until the fire was completely suppressed (forty to fifty minutes). The outcome of this study did not answer what would happen if the sprinklers had a limited application time.

This paper describes the results of experiments to evaluate the ability of a water sprinkler suppression system to control conveyor belt fires under two ventilation rates with a ten minute application of water. To simulate typical mine equipment, new and used 1.8-m-wide, 2G-approved SBR conveyor belts were installed on a conveyor structure in the FSF. Experiments were conducted at air velocities of 0.5 and 5.1 m/s, the lower and upper limits allowed by law. The regulations also state that sprinklers must have activation temperatures between 66 °C and 149 °C (30 CFR 75.1101-8). The sprinklers used in this study had activation temperatures of 68 °C and 141 °C to evaluate the effect of ventilation and limited water application on systems using sprinklers that cover the range of activation temperatures allowed by MSHA. In each experiment, the water was allowed to run for ten minutes after the first sprinkler activated. The belt was monitored, undisturbed, for several minutes after the water supply was turned off to observe if the fire would re-establish itself and continue to burn out of control. After five minutes of observation, the presence or absence of a propagating fire was used to determine if a ten minute application time was sufficient to extinguish the belt fire under the test conditions.

Fire Suppression Facility

The conveyor belt fire suppression tests were conducted at the Fire Suppression Facility (FSF), which is part of the NIOSH Lake Lynn Laboratory (LLL). The LLL is a world-class surface and underground facility located approximately 60 miles southeast of Pittsburgh, Pennsylvania. The FSF is constructed to simulate a U.S. coal mine entry and crosscut. The main tunnel is 46.6-m-long and the crosscut is 12-m-long. The entries are 2.2-m-high and 5.5-m-wide. The roof is made of corrugated steel bridge planks, the ribs are made of 20.3-cm thick mortared solid concrete blocks, and the floor is a single-pour slab of reinforced concrete. The interior roof and ribs are coated with 5-cm- and 2.5-cm-thick layers of fire resistant material, respectively. A 1.8-m-diameter variable speed axi-vane fan, equipped with a pneumatic controller to adjust fan blade pitch, is installed at the closed end of the main tunnel. The fan has the ability to provide airflow of up to about 7.6 m/s over the cross-section of the entry. Two man doors, which permit access to the inside of the FSF, are located about 14.3 m from the fan. Figure 1 shows the exterior of the FSF.

Figure 1. Exterior of Fire Suppression Facility

The FSF is equipped with an array of chromel-alumel thermocouples (type-K) projecting 3 cm from the mine roof. The thermocouples are spaced at 3 m intervals

Copyright © 2010 by SME

starting 3 m from the fan along the centerline to the end of the simulated entry. A 9-point thermocouple array, spaced evenly across the width and height of the entry, is set up 46 m from the fan to measure the temperature of the gas exiting the entry. These temperatures were later used to calculate the heat release rates of the fires. A gas sampling array is also located at the end of the tunnel exit to sample the amount of oxygen, carbon monoxide and carbon dioxide in the exiting gas. The array consists of three steel pipes located evenly across the width of the entry. Each steel pipe had three 3 mm holes, spaced evenly from the roof to the floor of the tunnel, for a total of nine gas sampling points. A pump draws from each pipe and mixes the gas prior to entering the gas analyzers.

The FSF is equipped with two video cameras to record each test. The first camera is mounted roughly 23 m from the fan in the center of the roof to give a frontal view of the conveyor belt structure during the belt burn test. The second video camera is placed on a stand on the left side of the tunnel (when facing the open end of the tunnel) to view the inside of the conveyor belt drive area where the belt is ignited.

The front of the conveyor belt structure is located 26 m from the fan and is slightly off center of the entry to allow for heavy equipment to pass on one side to install the belting on the structure. The conveyor belt structure measures 15.2-m-long and 2.2-m-wide. Fifty-five gallon steel drums are used to simulate the head roller, drive rollers, idler roller and take-up roller. The diameter of each drum is 0.6-m-wide and each drum is 1.7-m-long. On each end of the drums, a steel plate is welded with a 12.7-cm-diameter hole cut out of the center to allow for a 10.2-cm-diameter steel pipe to be inserted through the center of the drum. The pipe is attached to the structure as shown in figure 2. The trough idlers are placed at 1.5 m intervals.

Figure 2. Fifty-five gallon drum as drive roller

To ignite the belt, four sets of natural gas impingement burners connected in series are placed along the width of the belt next to the drive roller closest to the fan, approximately 15 cm below the belt, as shown in figure 3. Each burner is equipped with 60 stainless steel jets having a rated output of 0.042 to 0.11 BTU/s. The ignition area is confined by metal shields on three sides; the fourth side remains unshielded towards the open end of the fire tunnel to reduce the effect the ventilation may have on the ignition process.

Figure 3. Natural gas burners to ignite belt

An 18,900 L capacity closed water system adjacent to the FSF provides water for the installed fire suppression systems, as well as to hoses that can be used to extinguish hot spots remaining after tests. This system is capable of providing the pressure and volume of water needed to comply with federal regulations.

Fire Suppression System Installation

The water sprinkler fire suppression system was installed on the conveyor structure in accordance with 30 CFR 75.1101-8. In this study, glass bulb-type sprinklers with two different activation temperatures, 68 ºC and 141 ºC, were evaluated. The sprinklers were the same model from a name brand manufacturer with identical discharge coefficients (K=5.6 GPM/psi$^{1/2}$). Sixteen sprinklers on 2.4-m-centers were needed to protect 15.2 m of the structure. Two branch lines were required, one above the top belt and one between the top and bottom belt. A schematic of the installation is shown in figure 4. The sprinkler denoted as sprinkler 1 was located 0.7 m from the head roller, 1.6 m vertically from the floor and 1.2 m horizontally to the center of the top belt. Sprinkler 2 was installed below sprinkler 1, underneath the top belt, 0.7 m from the head roller, 1.1 m vertically from the floor and offset 0.6 m towards the right from the center of the belt when facing the open end of the tunnel. This set up

Copyright © 2010 by SME

was repeated seven more times along the length of the structure at 2.4 m intervals.

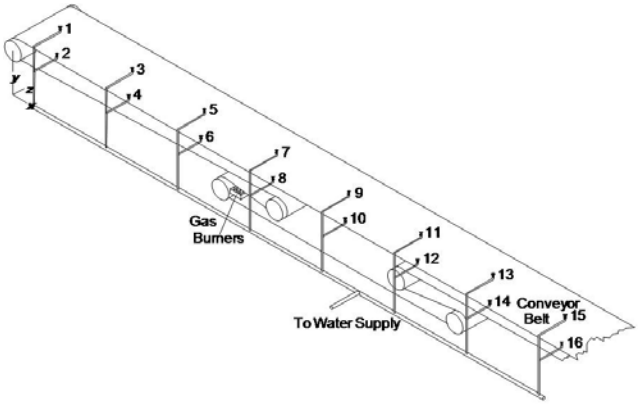

Figure 4. Water sprinkler system**.**

Test Procedure

For each test, 1.8-m-wide fire resistant belt that met 30 CFR Part 18.65 standards was installed on the conveyor belt structure shown in figure 5. Two different belts were used in these experiments, a new, 3-ply, SBR belt and a used, 3-ply SBR belt. Thermocouples were installed on the belt in the center, right and left edge of the belt at the following locations: 9.1 m and 12.2 m from the head roller on the top belt, 7.6 m and 13.7 m from the head roller on the bottom belt, 7.6 m and 13.7 m from the head roller on the belt between the drive rollers and take-up rollers, and 9.1 m from the head roller between the drive area and take up area. Each thermocouple was placed just below the surface of the belt to measure the temperature of the belt when the flame spread reached that location on the belt. Thermocouples were placed on each sprinkler next to the glass bulb to determine the air temperature when the sprinkler activated. Before each test, the air velocity was established using a handheld vane anemometer to measure the air flow. The anemometer was positioned above the top belt over the drive area approximately 0.3 m from the roof. Two measurements were taken and averaged together. If the measurement was not within ten percent of the desired air velocity, the pitch of the fan blades was adjusted until the airflow was correct. Once the air velocity was established, the fan was not turned off or adjusted until the test was completed. After the fan was set at the desired airflow, measurements were taken in front of the belt structure and in front of each thermocouple on the array located at the open end of the tunnel. The air velocities at each array point were averaged together to determine the average exit velocity.

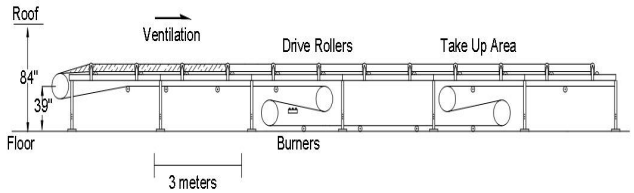

Figure 5. Test set up

To ignite the belt, the gas burners were lit with a propane torch and allowed to burn for ten minutes. If the fire appeared to be sustainable without the burner after ten minutes, the burners were turned off. If not, the gas was left on until the belt appeared to be ignited, at which time the burners were turned off. For six of the nine tests the sprinkler system activated before the end of the ten minute ignition period. If this occurred the gas supply to the burners was immediately shut off when the suppression system activated.

Once the fire suppression system activated, the time was noted, and the water was left on for ten minutes. After ten minutes, the water was turned off and the belt and ventilation were left undisturbed for five more minutes. The test was monitored from inside the control room to determine if the fire was extinguished, under control, or not under control. The tests were concluded once the belt reignited into a propagating fire (fail) or after five minutes if the belt was no longer on fire (pass).

Results and Discussion

Full scale fire suppression experiments were conducted with two changing variables: activation temperature of the sprinklers and airflow velocity in the FSF. For this experimental configuration, both of these parameters had an effect on the characteristics of the fire and the ability of the water system to suppress it. The amount of water used during the experiments was dependent on the number of sprinklers that activated during the fire. The results for all tests are shown in Table 1.

The initial test was conducted using new conveyor belt, an air velocity of 0.5 m/s, and sprinklers with an activation temperature of 141 °C. The sprinklers activated 8.3 min after the burners were ignited and the fire had grown to 0.034 MW. The suppression system failed to suppress the fire in ten minutes under these conditions. The next test, conducted under the same ventilation conditions and with the same sprinklers, but with used belt also resulted in a failed test. The sprinklers activated at 20.3 min and a fire size of 0.014 MW.

Copyright © 2010 by SME

Table 1. Results from full-scale suppression tests

Sprinkler Activation Temperature	Air Velocity, m/s	Belt Used	Initiation Time, min	Heat Release Rate at Activation, MW	Amount of Water Used, L	Outcome
141 °C	0.5	New	8.3	0.034	2,915	Fail
141 °C	0.5	Used	20.3	0.014	3,634	Fail
141 °C	5.1	New	6.3	0.83	2,574	Fail
141 °C	5.1	Used	10.9	0.85	4,315	Fail
68 °C	0.5	New	3.5	0.040	Not Available	Pass
68 °C	0.5	New	5.7	0.010	2,536	Fail
68 °C	0.5	Used	5.8	0.011	2,112	Pass
68 °C	5.1	New	5.4	1.9	Not Available	Fail
68 °C	5.1	Used	8.0	1.0	4,353	Fail

When the air velocity was increased to 5.1 m/s and sprinklers with 141 °C activation temperatures were installed, the suppression system in both the new and used belt tests failed to suppress the fire. During the test with the new belt the sprinklers activated at 6.3 min and a fire size of 0.83 MW, while the test with the used belt activated at 10.9 min and a fire size of 0.85 MW.

The tests using a suppression system with sprinklers with an activation temperature of 68 °C and airflow of 5.1 m/s also failed. The test with new conveyor belt had a heat release rate of 1.9 MW when the sprinklers activated at 5.4 min. The sprinklers activated at 8.0 min when the used belt was tested. The fire size at sprinkler activation was 1.0 MW.

Three tests were conducted using an air velocity of 0.5m/s and sprinklers with an activation temperature of 68 °C; two with new conveyor belt and one with used belt. In the first test with new belting, the first sprinkler activated at 3.5 min and a fire size of 0.040 MW. The sprinkler system successfully suppressed this fire. However, when the test was repeated, the sprinklers activated at 5.7 min and a fire size of 0.010 MW, but the suppression system was unable to put out the fire. The third test at 0.5 m/s, with sprinklers with an activation temperature of 68 °C, was conducted with used belt. The fire was 0.011 MW when the sprinklers activated at 5.8 min. In this test, the suppression system was successful in extinguishing the fire.

Effect of Sprinkler Activation Temperature

Five experiments were conducted with sprinklers that activated at 68 °C, while four experiments used 141 °C sprinklers. The sprinklers with the higher activation temperature typically activated later during the test (between 6.3 min and 20.3 min) than the sprinklers with the lower activation temperature (between 3.5 min and 8.0 min). In all cases for a particular belt (new versus old) at the same airflow, the sprinklers with activation temperatures of 68 °C sprinklers activated earlier than the sprinklers with activation temperatures of 141 °C. The locations of the sprinklers that activated were not dependent on the activation temperature.

Effect of Airflow

The nine experiments were conducted under two airflow conditions. Five experiments had a ventilation rate of 0.5 m/s and four experiments had a rate of 5.1 m/s. The difference in airflow caused several variations in the size of the fires and the response of the suppression system. At the lower airflow the largest fire was 0.040 MW when the suppression system activated. At the higher air velocity the smallest fire was 0.83 MW when the sprinklers activated. For the four tests at high air velocity the heat release rates at the time of activation were higher because more belting was involved in the fire before the system activated.

Figure 6 shows the heat release rate and time of sprinkler activation at the two airflows in tests using new belt and sprinklers with activation temperatures of 141°C. Testing at the high air velocity, sprinkler 10 was the first to activate at 6.3 min. This sprinkler was located between the top and bottom belts, 3 m downstream from the burners. Because of the sprinkler location, the shielding from the rollers prevented the water from reaching the fire in the ignition area. After ten minutes, the water supply was turned off but the belt was still burning in the drive roller area. As shown in figure 6, the fire continued to grow, reaching a maximum of 12.5 MW at ten minutes after sprinkler activation.

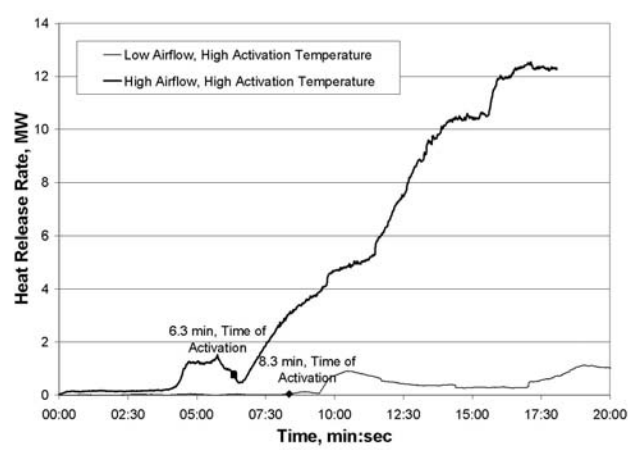

Figure 6. Heat release rates plots of fires using sprinklers with an activation temperature of 141 °C and air velocity of 0.5 m/s and 5.1 m/s.

In the test at the lower airflow, 0.5 m/s, sprinkler 7 was the first to activate at 8.3 min. This sprinkler is located directly above the ignition area. The sprinkler kept the fire size to about 1 MW or less for ten minutes. However, the top belt shielded the flames from the water

Copyright © 2010 by SME

so that the fire was never completely extinguished. When the water supply was turned off after ten minutes, the fire was able to re-establish itself and grow out of control, failing the test criteria.

Conclusion

Water sprinkler systems with two different activation temperatures (68 °C, 141 °C) were tested under two air velocity conditions (0.5 m/s, 5.1 m/s) using both new and used 2G approved SBR conveyor belt. Water is a very effective method for suppressing and extinguishing belt fires; however, a sufficient supply of water is a necessity. MSHA regulations require a constant flow of water for ten minutes with all sprinklers functioning. For this experiment the amount of water was not limited, but the suppression system was allowed to run for only ten minutes no matter how many sprinklers activated. Under these parameters, and with the set up used, this was not a sufficient amount of water to extinguish the fire. While the extinguishing system was running, sprinklers were able to reduce the fire to a level that a miner could extinguish it with a hose. However, during the failed tests it took less than five minutes after shutting off the water for the fire to reestablish to a size similar to or greater than it was prior to the system activating.

The two tests that resulted in suppressed fires both had low air flow (0.5 m/s) and sprinklers with a low activation temperature (68 °C). This air velocity allowed the sprinklers over the drive (fire) area to activate first, and the lower activation temperature initiated the suppression system earlier than higher activation temperature sprinklers. While the ventilation and sprinkler activation temperature affected the outcome of this experiment, it is important to note that the limited water application was a significant reason for the failed tests. Because of previous research, it can be assumed these test fires could have been suppressed if a substantially longer duration of water was available.

The large number of failed tests reaffirms the need to conduct additional belt fire suppression research under current typical mine conditions (ventilation, conveyor belt type, conveyor belt width). In addition, engineering-based data is needed to establish guidelines for improvements to the federal regulations (sprinkler spacing, sprinkler types, water supply) and development of new suppression system technologies.

Acknowledgement

The authors would like to thank our colleagues at NIOSH Pittsburgh Research Laboratory and Lake Lynn Laboratory and the contractors from Wolverine for conducting and setting up the experiments.

References

1. www.msha.gov/drs/drshome.htm Accessed December 2009
2. U.S. Code of Federal Regulations. Title 30-Mineral Resources; Chapter I-Mine Safety and Health Administration, Department of Labor; Subchapter O-Coal Mine Safety and Health; Part 75-Mandatory Safety Standards-Underground Coal Mines, Subpart L-Fire Protection, 1991.
3. Smith, A.C., R. W. Pro, and C. P. Lazzara. Performance of Automatic Sprinkler Systems for Extinguishing Incipient and Propagating Conveyor Belt Fires Under Ventilated Conditions. USBM RI 9538, 1995, pp. 3, 4, 18.
4. Rowland, J.H., Verakis, H., Hockenberry, M.A., Smith, A.C. 2009 Effect of Air Velocity on Conveyor Belt Fire Suppression Systems. SME Preprint No. 09-135. Denver: SME.

Copyright © 2010 by SME