RI 8933

Bureau of Mines Report of Investigations/1985

Comparison of Rotary and In-Hole Motor Techniques for Drilling Horizontal Boreholes in Coal

By S. J. Kravits, A. Sainato, and G. L. Finfinger

UNITED STATES DEPARTMENT OF THE INTERIOR

Report of Investigations 8933

Comparison of Rotary and In-Hole Motor Techniques for Drilling Horizontal Boreholes in Coal

By S. J. Kravits, A. Sainato, and G. L. Finfinger

UNITED STATES DEPARTMENT OF THE INTERIOR
Donald Paul Hodel, Secretary

BUREAU OF MINES
Robert C. Horton, Director

Library of Congress Cataloging in Publication Data:

Kravits, S. J. (Stephen J.)

Comparison of rotary and in-hole motor techniques for drilling horizontal boreholes in coal.

(Report of investigations ; 8933)

Bibliography: p. 19.

Supt. of Docs. no.: I 28.23:8933.

1. Coalbed methane drainage—Pennsylvania. 2. Boring. 3. Mine ventilation. I. Sainato, Albert. II. Finfinger, Gerald L. III. Title. IV. Series: Report of investigations (United States. Bureau of Mines) ; 8933.

TN23.U43 [TN305] 622s [622'.42] 84-23099

CONTENTS

	Page
Abstract	1
Introduction	2
Acknowledgments	2
Test site	2
Rotary borehole drilling	3
Equipment and procedures	3
Borehole surveying	6
In-hole motor borehole drilling	8
In-hole motor description	8
Deflection shoe description	9
Borehole surveying	11
Establishing deflection rates	12
One- and two-step bit projections	13
Drilling parameters and penetration rates	14
Sidetracking	15
Timestudy comparison	15
Drilling cost comparison	16
Conclusions	16
References	19
Appendix A.--Surveying procedures	20
Appendix B.--Deflection rate components and bit projections	25
Appendix C.--Timestudies of each borehole	30

ILLUSTRATIONS

1.	Mine map	3
2.	Longyear drill	4
3.	Power unit	5
4.	Various rotary drill string configurations	6
5.	Borehole plots showing vertical deviation	7
6.	Survey instrument	8
7.	Plan view of boreholes	8
8.	Navi-Drill in-hole motor	9
9.	Deflection shoe	10
10.	Deflection shoe side force	11
11.	Various tool face settings and their effects on borehole trajectory	12
12.	Drilling parameters of in-hole motor	14
13.	Available drilling time	16
A-1.	Reading film disks	20
A-2.	Survey hardware	21
A-3.	NL Sperry-Sun protective case, survey instrument, and snubber	21
A-4.	Orienting sub	22
A-5.	Alignment of snubber, mule shoe, orienting sub, and deflection shoe	22
A-6.	Lead tattletale before and after completing a borehole survey	23
A-7.	Tool face setting guide	24
B-1.	Sidetracking with an in-hole motor	28

TABLES

		Page
1.	Performance of various rotary drill strings	6
2.	Bevel springs used with deflection shoe	9
3.	Calculated deflection rates	13
4.	Timestudy comparison of the two drilling methods	15
5.	Initial drilling equipment costs, both rotary and in-hole motor	17
6.	Rotary and in-hole motor drilling equipment costs	18
7.	Cost comparison of the two drilling methods	18
B-1.	Calculating deflection rate components	25
C-1.	Rotary drilling timestudy	30
C-2.	In-hole motor drilling timestudy	31

UNIT OF MEASURE ABBREVIATIONS USED IN THIS REPORT

ft	foot	lb	pound
ft·lbf	foot pound (force)	min	minute
ft/min	foot per minute	mo	month
gal	gallon	pct	percent
gal/min	gallon per minute	psig	pound per square inch, gauge
h	hour	r/min	revolution per minute
hp	horsepower	V	volt
in	inch	yr	year

COMPARISON OF ROTARY AND IN-HOLE MOTOR TECHNIQUES FOR DRILLING HORIZONTAL BOREHOLES IN COAL

By S. J. Kravits,[1] A. Sainato,[2] and G. L. Finfinger[3]

ABSTRACT

This Bureau of Mines report describes and compares the procedures, capital investments, and operating costs of rotary and in-hole motor drilling techniques used to drain methane gas from the Pittsburgh Coalbed in an underground mine located in southwestern Pennsylvania. A timestudy was conducted during the drilling of each of two boreholes, and the data were collated to serve as a base for comparing drilling procedures and operating costs.

Findings indicate that drilling with an in-hole motor offers four advantages over rotary drilling; namely, an increase in drilling productivity, fewer worker-hours required, ease of maintaining vertical and horizontal bit trajectory, and less expensive drilling cost per foot of borehole.

[1]Mining engineer.
[2]Mining engineering technician.
[3]Supervisory geologist.
Pittsburgh Research Center, Bureau of Mines, Pittsburgh, PA.

INTRODUCTION

Methane control by drainage is generally accepted within the coal mining industry as a means of reducing excessive gas emissions into the mine environment (1-2, pp. 14-16).[4] The Bureau of Mines has demonstrated that methane drainage by horizontal boreholes is a safe and effective method of removing methane in advance of mining and of controlling methane emissions during mining (1-4). Implementation of this technology has consistently lowered emissions at active faces by at least 50 pct. Although the Bureau has rotary-drilled horizontal boreholes to depths greater than 2,500 ft, the technique has not been universally accepted. The major deterrents to rotary drilling have been the difficulty in maintaining vertical bit trajectory within the coalbed and the lack of control in the horizontal plane. Vertical bit trajectory is maintained by varying combinations of bit rotation, thrust, and placement of centralizers on the drill string. Strategic placement of centralizers on the drill string results in a force being applied vertically on the drill bit, which determines the direction the drill bit will cut. However, excessive losses in drilling time can result from changing the drill string configuration each time a certain configuration has been found to be ineffective in maintaining trajectory within the coalbed. Until the driller determines through trial and error which configuration is most effective, losses in drilling time will occur.

Within the last 5 yr, experience has increased in using in-hole motors to drill horizontal boreholes. In 1979, the Bureau used Smith International's Dyna-Drill[5] (in-hole motor) to drill three horizontal boreholes in the Pittsburgh Coalbed from a directional surface borehole (5). Vertical and horizontal drill bit trajectory was maintained with relative ease compared with trajectories of previous in-mine, rotary-drilled horizontal boreholes.

This report describes and compares the techniques of rotary and in-hole motor drilling, the timestudy data, and the equipment and operating costs for the two horizontal boreholes. Detailed in-hole motor drilling information is provided in appendixes A and B.

ACKNOWLEDGMENTS

The cooperation and technical assistance of mine personnel, of Maynard Stenberg, technical manager, and Lars Edling, directional drilling specialist, Boyles Bros. Drilling Co., and of Glen Stewart, district supervisor, NL Sperry-Sun, are greatly appreciated.

TEST SITE

The test site was an 11-entry section of an underground mine in the Pittsburgh Coalbed in southwestern Pennsylvania (fig. 1). Mining of the section was abandoned 12 yr ago because of excessive gas and water problems that severely hindered coal production. Two horizontal boreholes were drilled from the outside entries of the section in a direction parallel to the future development. These boreholes outlined the advancing section for more than 1,200 ft, shielding it from methane emissions. Polyethylene pipeline was used to transport methane safely from the boreholes to the vertical borehole during the drilling and drainage phase by using the appropriate gas handling equipment (4).

[4]Underlined numbers in parentheses refer to items in the list of references preceding the appendixes.

[5]Reference to specific equipment does not imply endorsement by the Bureau of Mines.

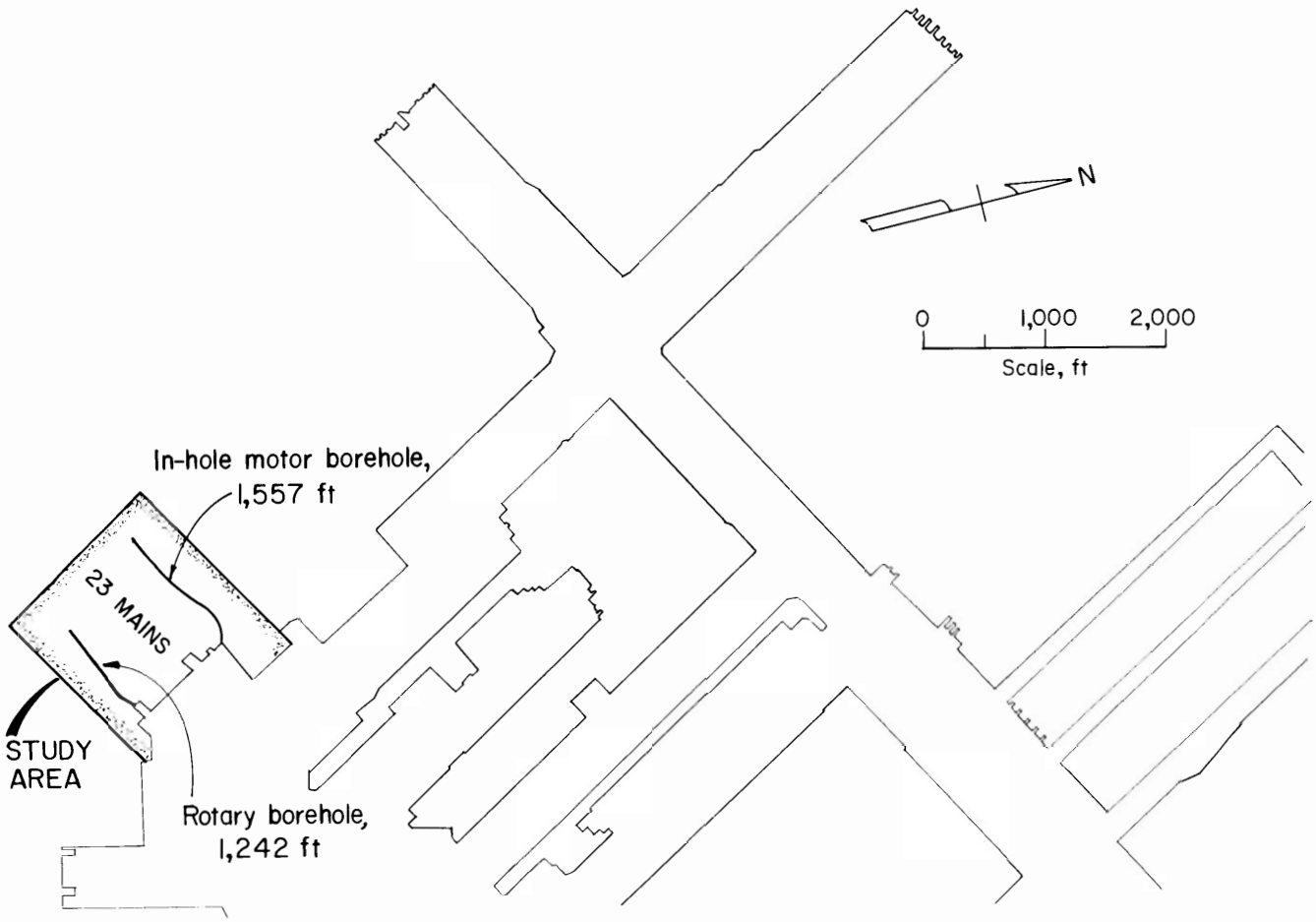

FIGURE 1. - Mine map.

ROTARY BOREHOLE DRILLING

EQUIPMENT AND PROCEDURES

Drill bit thrust and rotation were supplied by a Longyear hydraulically operated drill (fig. 2). The power unit for the drill was located 100 ft outby in a fresh air entry and was equipped with a 30-hp, 440-Vac motor (fig. 3).

The primary objective during rotary drilling is to maintain bit trajectory within the coalbed by keeping bit inclination to within 1° of coalbed dip. Four rotary drill string configurations were used to drill the first horizontal borehole (fig. 4). The performance of the four rotary configurations and drilling parameters used, including their effects on bit trajectory, are summarized in table 1. Initially, the standard drill string configuration (fig. 4*A*) was used, but it was found to be ineffective in maintaining bit inclination. Consequently, three other rotary drill string configurations were used to complete the borehole.

The drill string that proved to be the most effective in maintaining vertical borehole trajectory was the modified drill string shown in figure 4*B*. This configuration uses only the front centralizer and the drill collar. Removing the rear centralizer tilts the configuration 0.1° upward in the borehole, relieving the weight of the drill collar from the blades of the drag bit. Drilling with the modified configuration caused inclination to build slightly, at about 1° per 100 ft, eventually resulting in

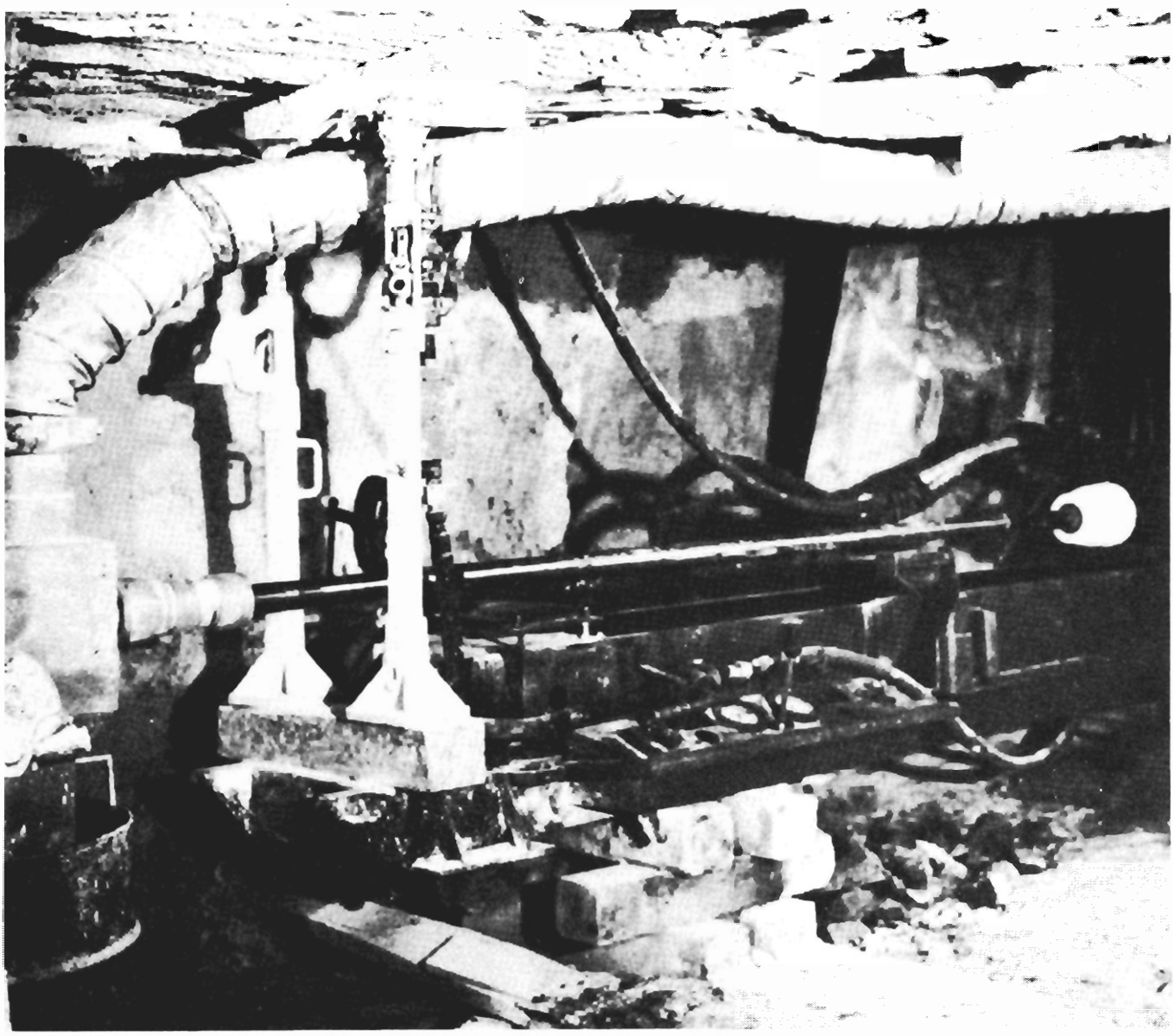

FIGURE 2. - Longyear drill.

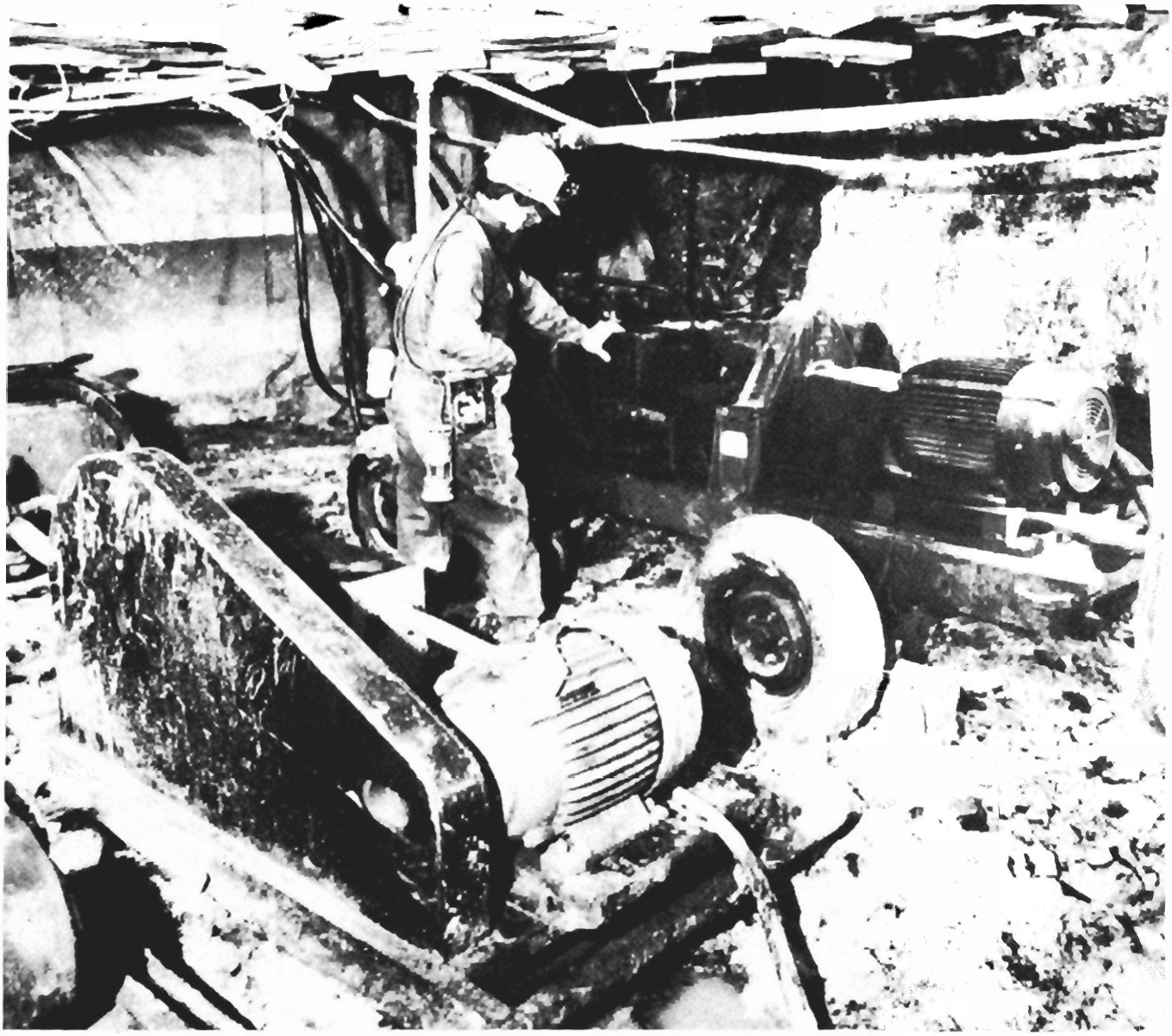

FIGURE 3. - Power unit.

TABLE 1. - Performance of various rotary drill strings

Drill string configuration	Thrust, lb	Rotation, r/min	Effect on bit trajectory	Penetration rate, ft/min
Standard long-hole (fig. 4*A*).	700-1,500	500-600	Downward or dropping angle.	1.0-2.0
Do.....	1,500-2,000	200-500	...do.....	2.0-4.0
Do.....	>2,000	100-200	...do.....	4.0-5.0
Modified (fig. 4*B*).....	2,000-3,000	100-200	Slowly building angle.....	1.0-1.5
Reaming (fig. 4*C*):				
Drop angle.....	1,000-1,500	250-500	Sharply dropping angle (-0.06° per foot drilled).	.5-1.0
Starting new borehole	700-1,000	500-700	Dropping angle.....	[1].3- .5
Maximum build (fig. 4*D*)	>2,000	100-200	Sharply building angle (+0.03° per foot drilled).	1.0-2.0

[1]Procedure necessitates slow penetration.

the borehole trajectory's intercepting the roof rock. Continuous efforts to drop borehole trajectory by reducing bit thrust and increasing bit rotation failed. To drop trajectory, the reaming drill string configuration was used (fig. 4*C*). This configuration was also used to sidetrack or start new boreholes slightly below existing ones (fig. 5*A*).

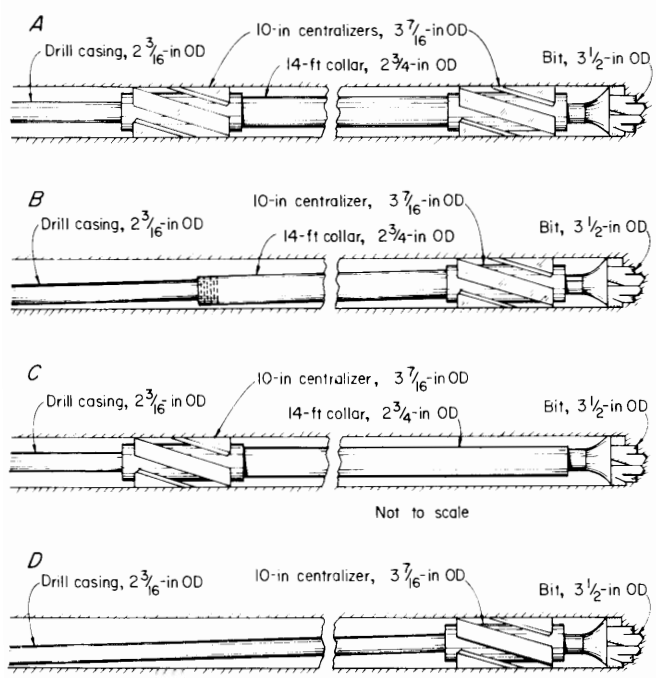

FIGURE 4. - Various rotary drill string configurations: *A*, Standard longhole; *B*, modified; *C*, reaming; *D*, maximum build.

The maximum build drill string configuration (fig. 4*D*) was used to build or recover borehole trajectory at a rate of 3° per 100 ft after trajectory had deviated by more than 1° below coalbed dip.

BOREHOLE SURVEYING

The NL Sperry-Sun permissible single-shot survey instrument was used to determine borehole inclination during rotary drilling (fig. 6). To determine the inclination of the bit, the timer of the survey instrument is set and the instrument is loaded with a film disk. The loaded survey instrument is placed in its protective casing, which is then inserted inside the drill rod and pumped, using water, to the end of the borehole. At the preset time, the film disk is exposed, after which the instrument is retrieved by a wire line attached to the protective casing. Subsequently, the film disk is removed, developed, and read (6).

As previously mentioned, there is no horizontal control on borehole trajectory during rotary drilling; therefore, the borehole was surveyed for bearing after borehole completion (fig. 7). The borehole arced in the right-hand or clockwise direction, as have the majority of previously rotary-drilled boreholes.

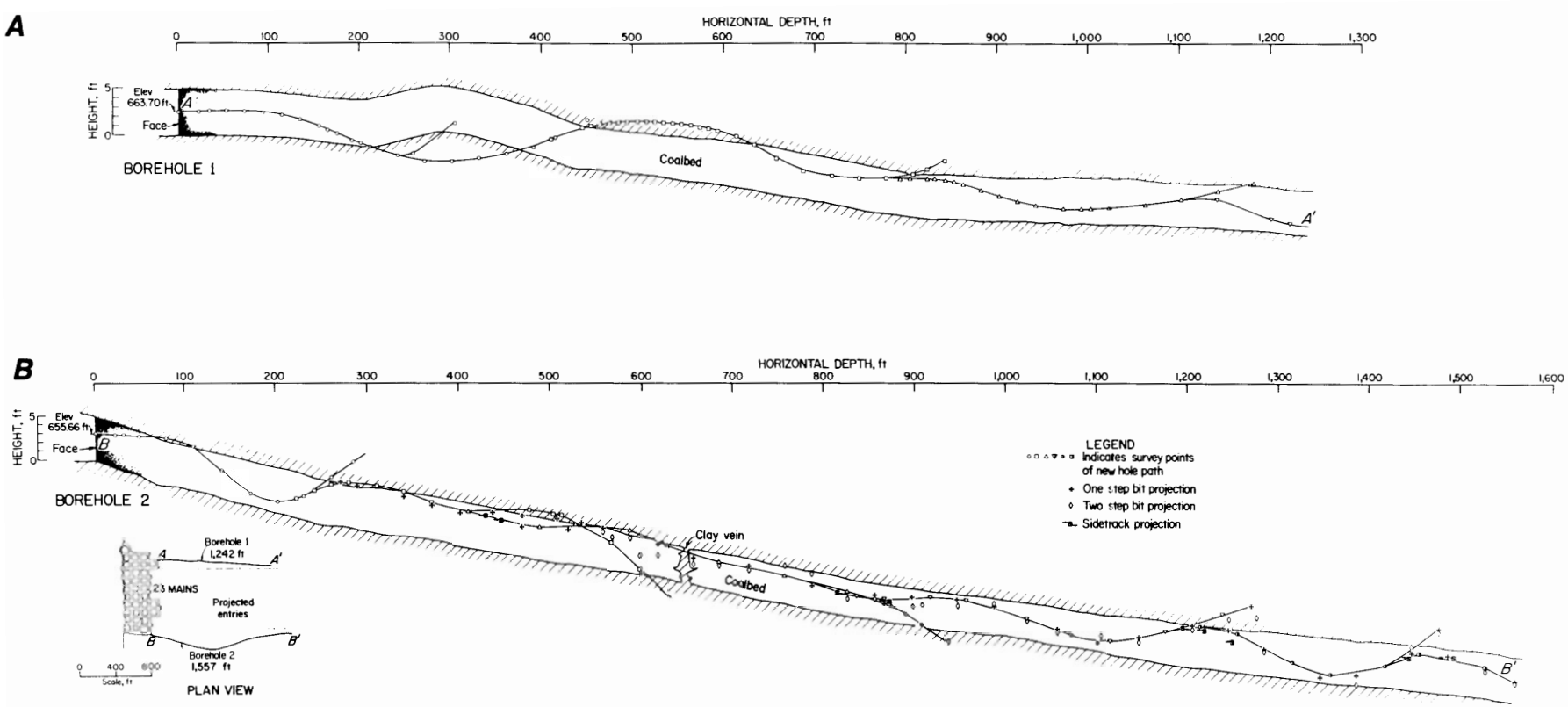

FIGURE 5. - Borehole plots showing vertical deviation. *A*, Rotary-drilled borehole; *B*, borehole drilled with in-hole motor.

IN-HOLE MOTOR BOREHOLE DRILLING

IN-HOLE MOTOR DESCRIPTION

In conjunction with the Longyear drill and power unit used to provide bit thrust, a Christensen Diamin Products Navi-Drill 2-3/4-in-OD in-hole motor and a 3-1/2-in-OD tricone roller bit were used to drill the second borehole. The Navi-Drill hydraulically rotates the drill bit without rotating the drill string (7). The major components of the Navi-Drill in-hole motor are identified in figure 8. When drilling fluid is pumped through the 2-3/4-in in-hole motor

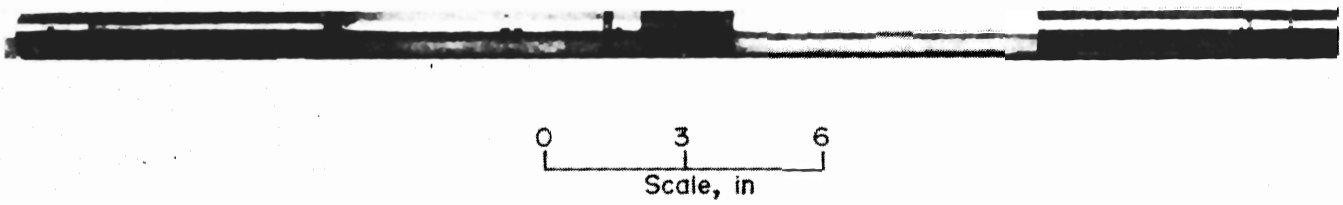

FIGURE 6. - Survey instrument.

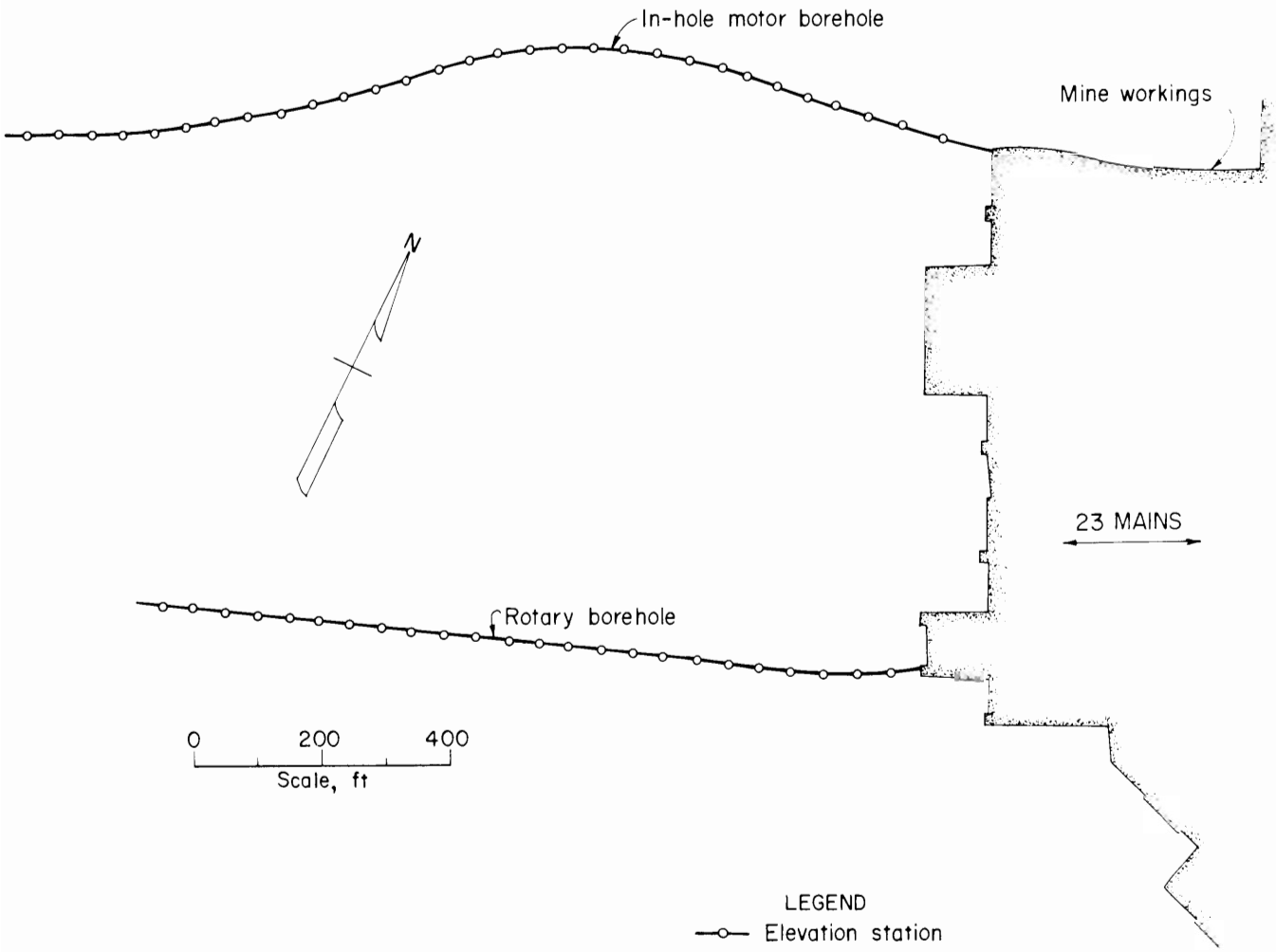

FIGURE 7. - Plan view of boreholes.

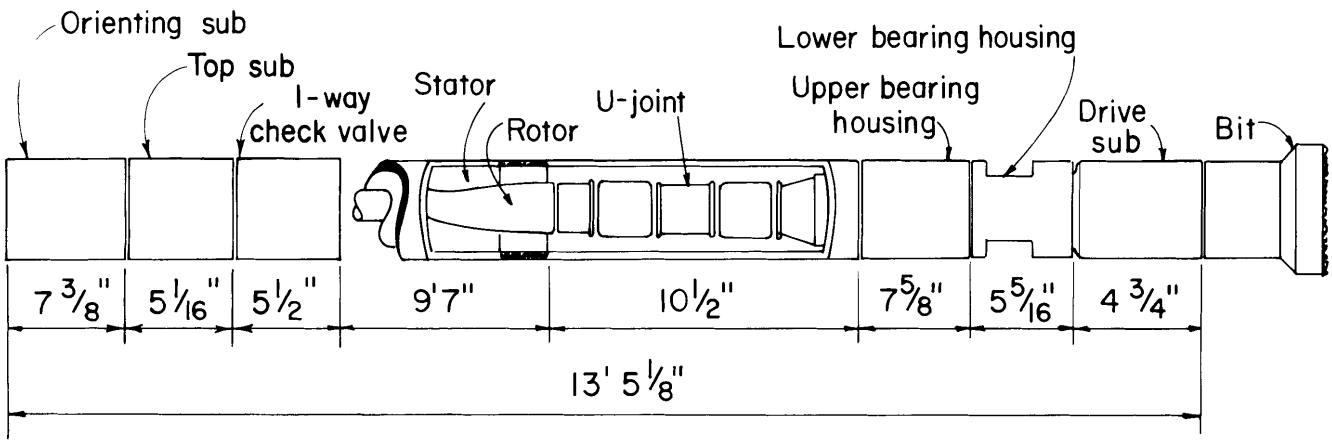

FIGURE 8. - Navi-Drill in-hole motor, 2-3/4-in OD.

at flow rates of 40 to 70 gal/min and pressures of 100 to 650 psig, the helical steel rotor rotates inside the rubber-molded stator. Rotation of the drive shaft, positioned within the upper and lower bearing assemblies, is transmitted by the universal joint, converting the eccentric rotary motion of the rotor to concentric motion. The drive sub is connected to the drive shaft and is the only rotating external component of the in-hole motor. Both horizontal and vertical borehole trajectories can be maintained when in-hole motors are used.

DEFLECTION SHOE DESCRIPTION

A deflection shoe developed by Conoco (8) and Christensen Diamin Products (7) was used to maintain desired borehole direction (fig. 9). Other control devices, such as bent housings positioned over the universal joint, are also applicable for maintaining borehole trajectory (5). The deflection shoe is a positive, unidirectional, constant-wall-contact device positioned on the lower bearing housing (fig. 9*C*). While drilling, there is continuous contact between the deflection side of the shoe and the wall of the borehole. Bevel springs in the deflection side of the shoe push the shoe away from the lower bearing housing. The known side force exerted by the springs against the wall of the borehole can be adjusted by varying the number of springs used (between 11 and 14) and/or by using springs of varying stiffness (table 2). Because coal is a relatively soft material, minimum deflection rates were desired, and therefore, lightweight springs were used. The resultant reaction of the side force exerted on the wall of the borehole is a force exerted on the bit 180° away from the deflection side of the shoe (fig. 10). The direction of the force exerted on the bit is called tool face direction or borehole direction. Tool face direction can be positioned to drill up, down, left, or right by manually turning the drill string clockwise with a pipe wrench. The driller must at all times be aware of tool face direction to achieve desired horizontal and

TABLE 2. - Bevel springs used with deflection shoe to exert side force

Spring type or weight	Load per spring, lb	Deflection per spring, in	Stress to flatten, 10^3 psi
Light weight.....	49	0.0069	133
Medium weight....	64	.0078	138
Heavy weight.....	76	.0073	136

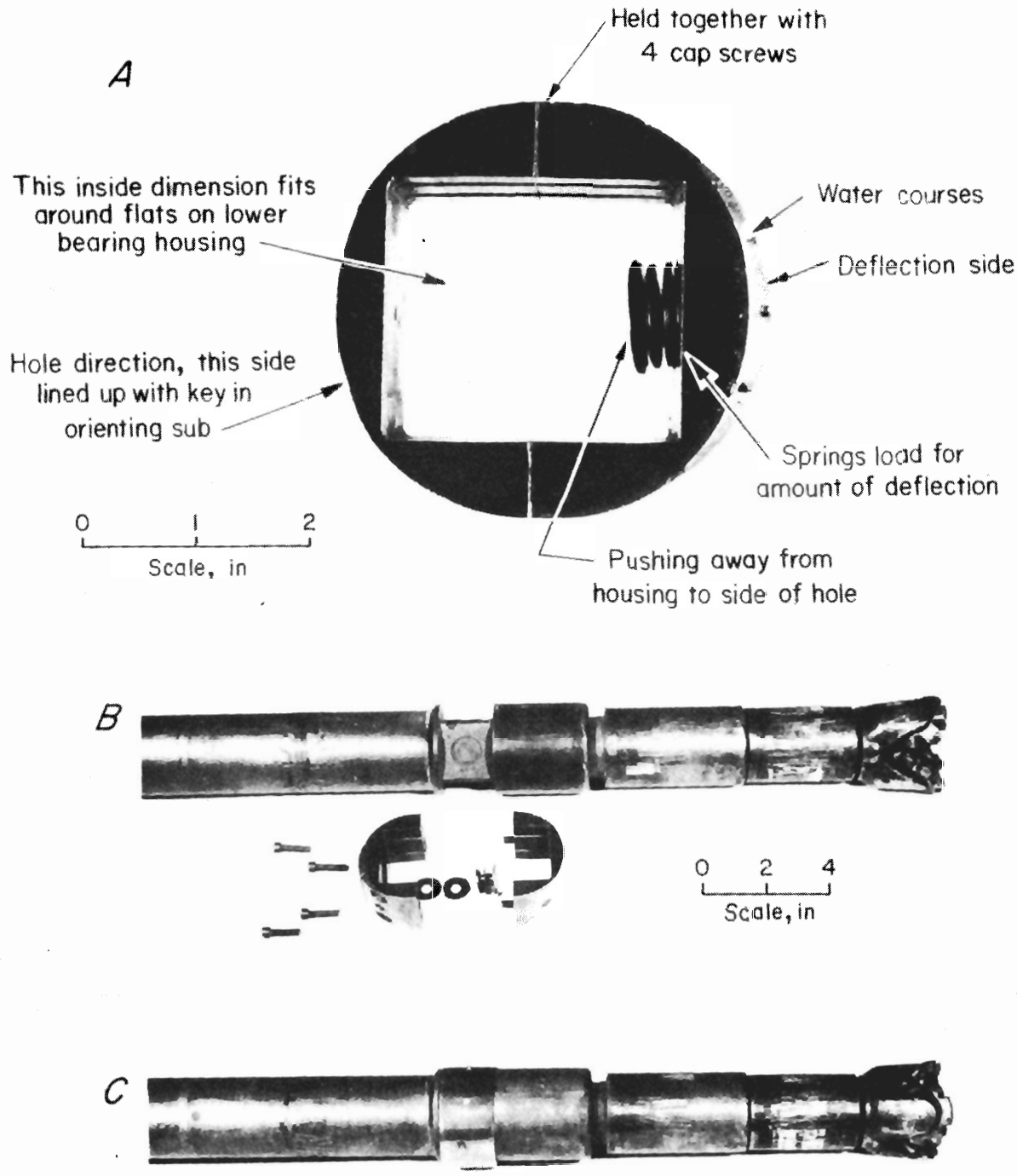

FIGURE 9. - Deflection shoe. *A*, Description; *B*; exploded view; *C*, shoe positioned on lower bearing housing of in-hole motor.

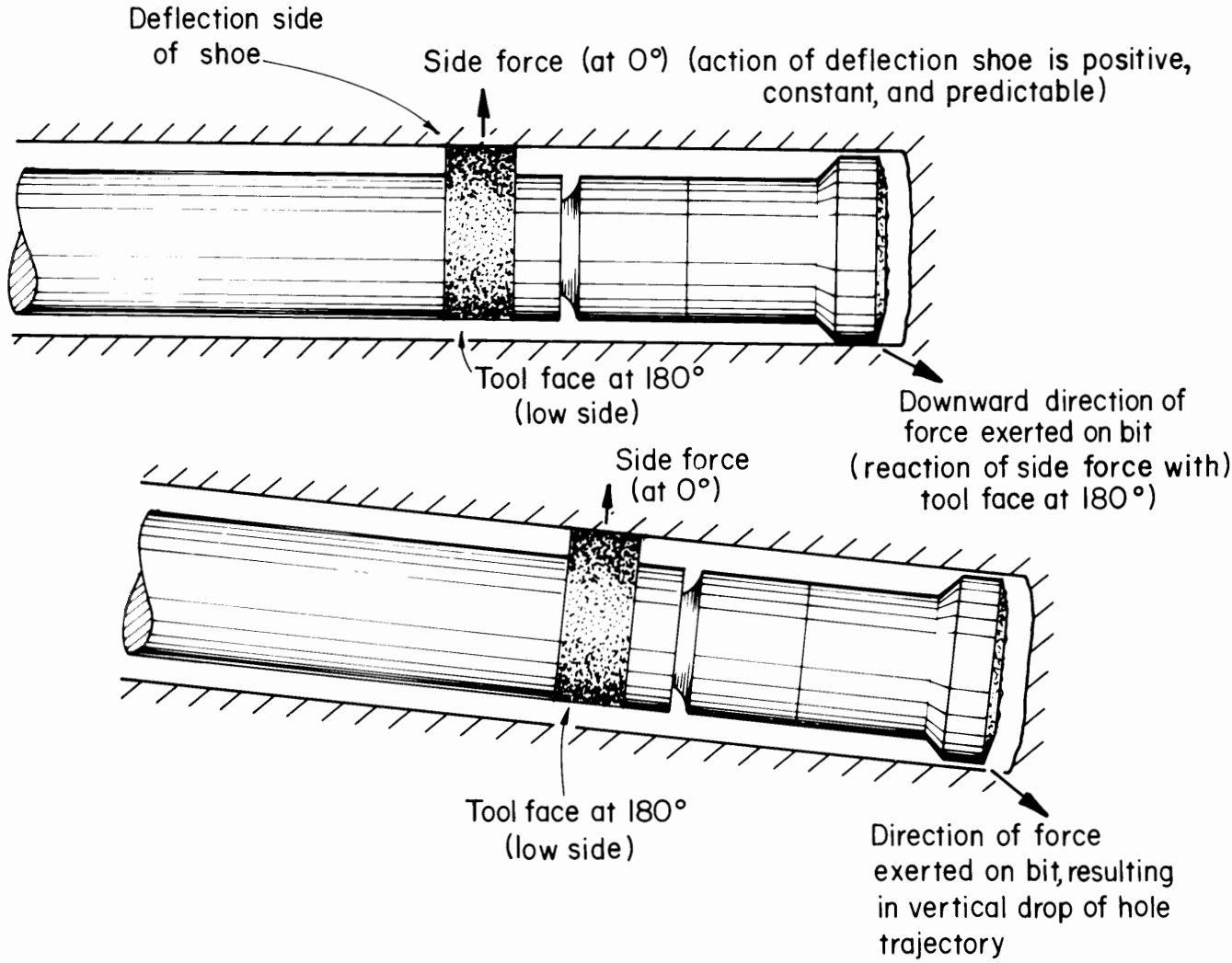

FIGURE 10. - Deflection shoe side force.

vertical borehole trajectory. Various tool face settings and their effects on borehole trajectory are shown in figure 11.

BOREHOLE SURVEYING

The NL Sperry-Sun magnetic directional single-shot survey instrument was used to determine inclination, bearing, and tool face direction during drilling with the in-hole motor. A detailed explanation of the procedures for reading Sperry-Sun directional film disks (9) and aligning the survey hardware, orienting sub, and deflection shoe is given in appendix A.

Fifty feet of stainless steel drill rod (five 10-ft joints) was used directly behind the in-hole motor to prevent magnetic interference of the survey directional compass. The surveys were taken 30 ft behind the deflection shoe, with the survey instrument placed within the second and third stainless steel rods behind the in-hole motor.

The procedure for completing a survey while drilling with an in-hole motor is given in appendix A. After a survey was completed, the inclination, bearing (after correcting for magnetic declination), and distance from the previous survey

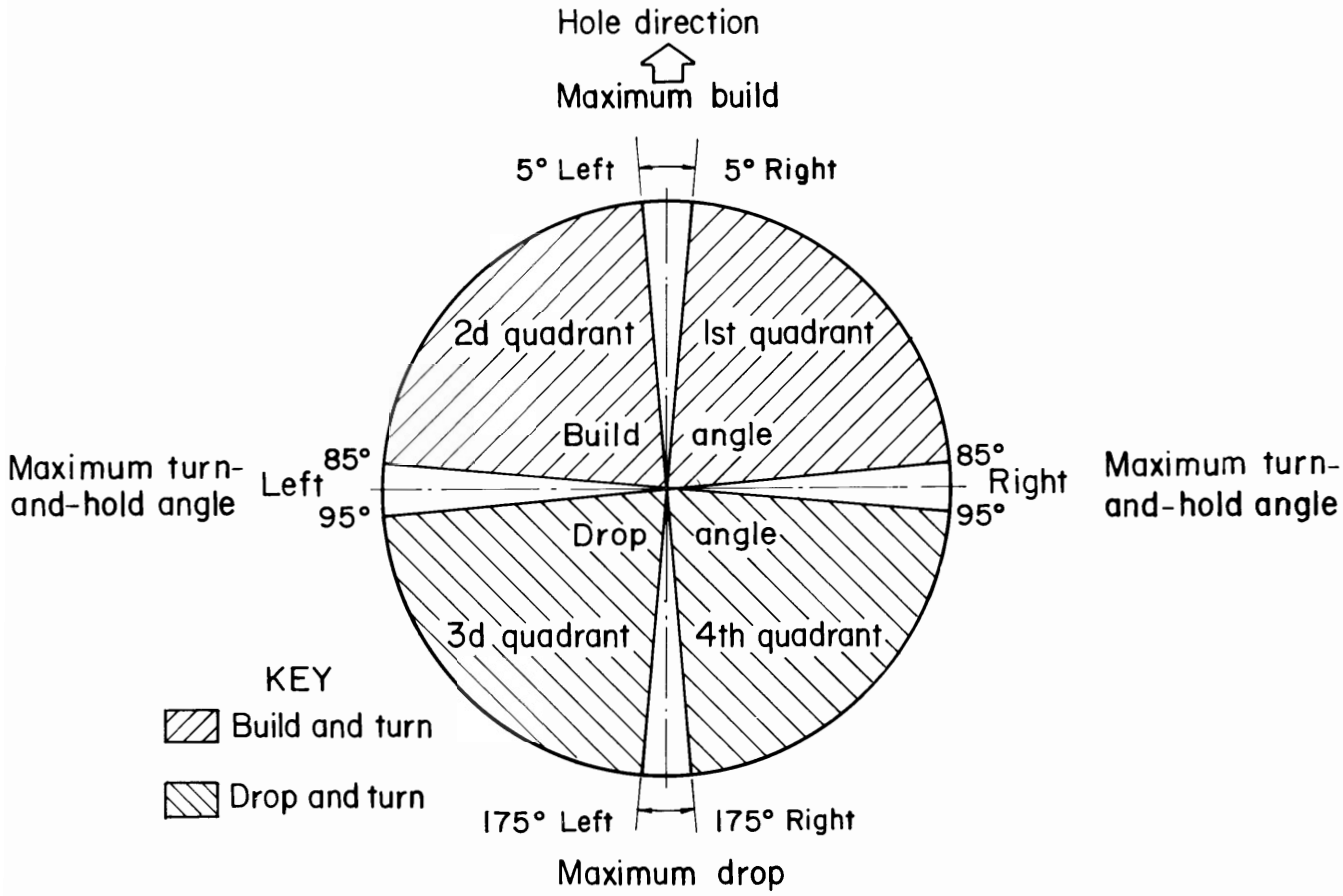

FIGURE 11. - Various tool face settings and their effects on borehole trajectory.

were entered into a "radius of curvature" calculator program adapted for a Hewlett-Packard 34C calculator (calculator program and results available upon request). New vertical and horizontal borehole survey locations were determined and plotted on section and plan view plots. Before a new tool face direction was set (appendix A), the actual bit location (30 ft ahead of the survey location) was projected. Projecting bit position was a process that depended on a knowledge of the established deflection rates and one- and two-step bit projection techniques.

ESTABLISHING DEFLECTION RATES

The deflection rate is the rate at which borehole direction (azimuth) and/or inclination will deflect or change while drilling. Ideally, the vertical and horizontal deflection rate components corresponding to tool face settings should be determined by field measurements collected during drilling. Because only one borehole was to be drilled using the in-hole motor, the average deflection rate magnitude, 0.10° per foot, was determined during the first 300 ft of drilling. The deflection rate magnitude applies directly to tool face settings of 0°, 180°, and 90° right and left. For these four settings there is either a vertical or a horizontal component, but not both. With all other tool face settings, there are changes during drilling in both inclination and azimuth, as shown in table 3. A rule-of-thumb method explained in appendix B was used to break down the deflection rate magnitude into vertical and horizontal components, in order to have the capability of accurately projecting the bit position from the survey depth.

TABLE 3. - Calculated deflection rates (using 0.10° per foot as deflection rate magnitude)

Tool face setting (right or left)	Horizontal component: Turn, hole direction, degree per foot	Vertical component	
		Build vertical angle, degree per foot	Drop vertical angle, degree per foot
QUADRANT 1 OR 2 (FIG. 11)			
0°.....	0.000	0.100	NAp
10°.....	.010	.089	NAp
20°.....	.022	.078	NAp
30°.....	.033	.067	NAp
40°.....	.044	.056	NAp
50°.....	.056	.045	NAp
60°.....	.067	.033	NAp
70°.....	.078	.022	NAp
80°.....	.089	.010	NAp
90°[1].....	.100	.000	NAp
QUADRANT 3 OR 4 (FIG. 11)			
100°.....	0.089	NAp	0.010
110°.....	.078	NAp	.022
120°.....	.067	NAp	.033
130°.....	.056	NAp	.044
140°.....	.044	NAp	.056
145°.....	.039	NAp	.061
150°.....	.033	NAp	.067
160°.....	.022	NAp	.078
170°.....	.010	NAp	.089
180°.....	.000	NAp	.100

Nap Not applicable.

[1]At 90° right or left, the in-hole motor did not hold vertical angle but instead lost or dropped angle slightly because of the effects of gravity and because coal is a soft material.

NOTE.--These deflection rates are not necessarily applicable to other coalbeds or even to other coal mines operating in the Pittsburgh Coalbed. Also, these rates were experienced using a deflection shoe, a 3-1/2-in-OD tricone roller bit, and BQ size (2-3/16-in-OD) wire line drill rod. Usage of other assemblies might result in different deflection rates.

ONE- AND TWO-STEP BIT PROJECTIONS

During a one-step vertical projection, the deflection rate vertical component was used to calculate the projected change in inclination from survey to bit depth and to project the vertical position of the bit. During a one-step horizontal projection, the horizontal component was used to project the coordinates of the bit (appendix B). Borehole trajectory in the vertical plane was of primary importance; therefore, only a few one-step horizontal projections were made. Examples of one-step vertical bit projections are provided in appendix B and plotted on figure 5*B*. Although one-step vertical projections increased trajectory control, they did not provide the necessary information on bit position for the end of the next drilling interval. Consequently, two types of two-step vertical projections were implemented in the drilling plan.

Type A two-step vertical projections were used when the next drilling interval applied the same tool face setting as that used in the previous interval, and therefore, these were essentially one-step projections extended from the current survey depth to the end of the next

planned interval. Type B two-step vertical projections were used when drilling proceeded with a changed tool face setting. First, the standard one-step vertical projection from the survey to the current bit depth was calculated. Then, using the projected inclination for the current bit depth and the deflection rate vertical component of the new tool face setting assigned to the next drilling interval, the vertical bit position for the end of the next interval was calculated. Examples of both types of two-step vertical bit projections are included in appendix B.

Of the 36 one-step vertical projections made, 29 were within 0.30 ft of the plotted borehole trajectory, and 20 of the 30 two-step projections were within 0.50 ft. Although two-step projections were not as accurate as one-step projections, they served as useful tools in providing future bit position, resulting in increased drilling productivity. Fifteen shifts of the last 22 were productive (60 ft or more drilled) after implementing two-step projections. By comparison, only 6 of the first 17 drilling shifts were productive using only one-step projections.

DRILLING PARAMETERS AND PENETRATION RATES

The second borehole was drilled using BQ (2-3/16-in OD) size wire line drill rod with thrust levels ranging from 2,000 to 6,000 lb and bit rotation speeds of 690 to 770 r/min. When tool face direction was changed by more than 90°, thrust levels increased to as much as 6,000 lb in coal, which was probably caused by the bending of the BQ rod immediately behind the in-hole motor. Bit thrust was provided by the Longyear hydraulic drill, while the bit was driven by water forced under pressure supplied by two triple piston pumps. The pumps supplied water from a 250-gal holding tank to the in-hole motor at 60 to 65 gal/min, which rotated the bit at speeds of 690 to 770 r/min (fig. 12). At 690 to 770 r/min, the motor could generate approximately 20 hp. Water pressure to the in-hole motor

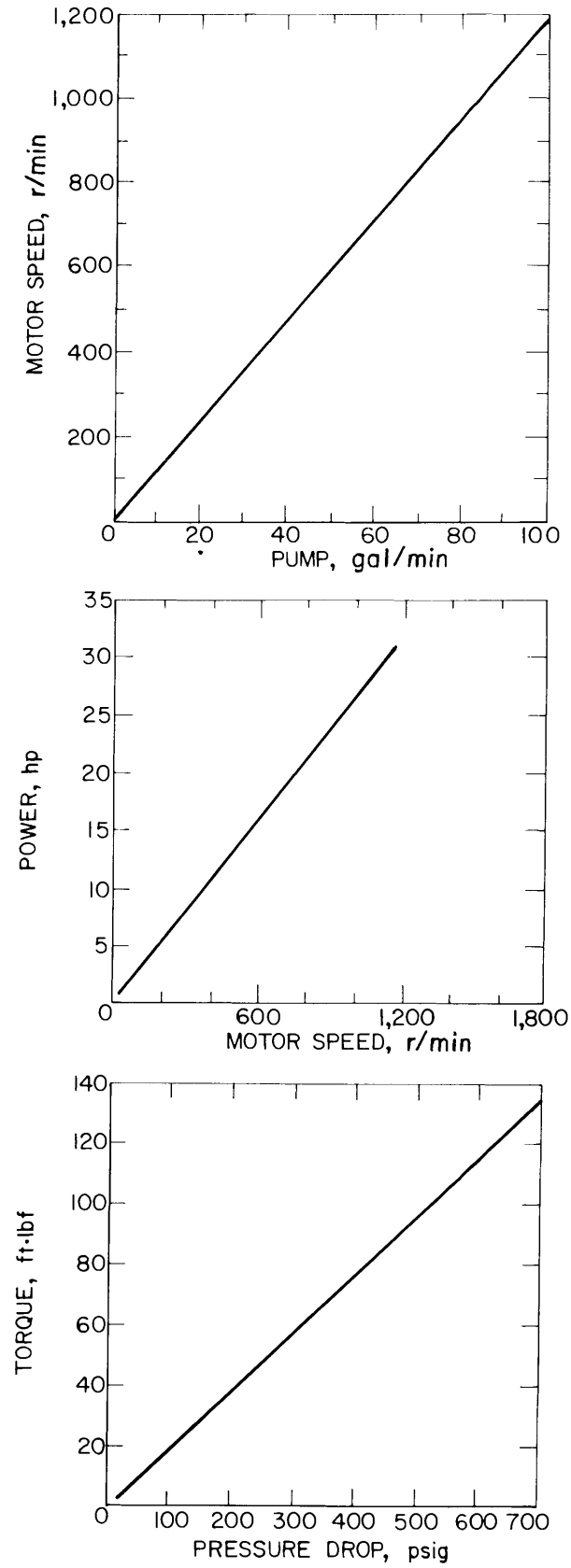

FIGURE 12. - Drilling parameters of in-hole motor.

was maintained between 500 and 700 psig, providing a bit torque between 95 and 135 ft•lbf. These parameters were used throughout borehole completion. Drill borehole effluent (water and cuttings in suspension) were discharged into a large sump and removed by a low-pressure, high-volume discharge pump into a discharge pipeline.

Drilling penetration rates in coal ranged from 0.3 to 1.0 ft/min, averaging approximately 0.7 ft/min. Penetration rates would decrease at the start of drilling with a new tool face setting. Lower penetration rates of 0.3 to 0.4 ft/min were especially noticeable during drilling intervals of 10 to 30 ft immediately after the tool face setting had been changed by more than 90°. However, an average penetration rate of 0.7 ft/min (10 ft per 14 min) was more than satisfactory since the objective of this study was not to maximize penetration rate per drill rod but rather to maximize the total footage drilled per shift through the elimination of trajectory control problems.

SIDETRACKING

It was possible to sidetrack or start a new borehole below the present one while drilling with an in-hole motor. Five sidetracks were completed, at measured depths of 241, 421, 821, 1,187, and 1,427 ft, to return the borehole back into the coalbed after the roof or floor strata had been intercepted (fig. 5*B*). The procedure of sidetracking with an in-hole motor and an example projecting the effects of sidetracking are included as a section in appendix B.

TIMESTUDY COMPARISON

A timestudy of rotary and in-hole motor drilling (provided in appendix C) showed that 49 pct of the total time to complete each borehole was occupied by downtime and traveling portal to portal. Drilling, changing the drill string, and surveying consumed the other 51 pct. These last three operations constitute available drilling time. Of the available drilling time in completing the rotary borehole, drilling consumed 42 pct and changing the drill string configuration, 35 pct (table 4 and figure 13). Consequently, 35 pct of the drilling time was lost in changing the drill string configuration in order to maintain vertical borehole trajectory. In completing the second borehole, drilling consumed 77 pct of the available drilling time. The in-hole motor did not need to be pulled out of the borehole to maintain vertical and horizontal trajectory. Surveying took the 23-pct balance of the available drilling time for both drilling methods. There were 21 productive drilling shifts of greater than 60 ft using the in-hole motor and only 11 during rotary drilling. The footage drilled during the in-hole

TABLE 4. - Timestudy comparison of the two drilling methods

	Rotary	In-hole motor
Available drilling time, pct:		
Drilling	42	77
Surveying	23	23
Changing rotary drill string	35	NAp
Productive shifts[1]	11	21
Average drilled per shift ft	31.35	57.79
Worker-hours:		
Setup	108	156
Borehole completion	1,248	676
Final depth ft	1,242	1,557

NAp Not applicable.
[1]60 ft or more drilled per shift.

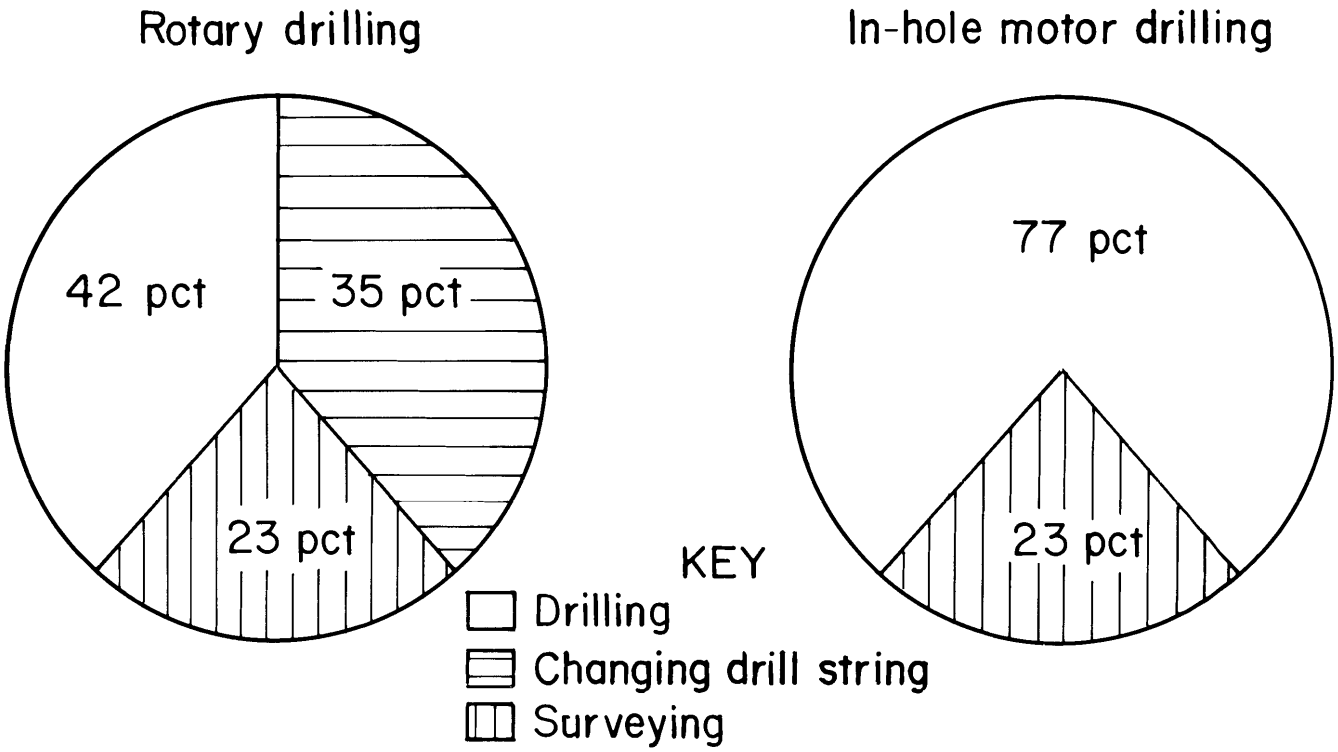

FIGURE 13. - Available drilling time.

motor and rotary drilling productive shifts totaled 1,750 and 780 ft, respectively. The average drilled footage per shift for rotary and in-hole motor drilling was 31.35 and 57.79 ft per shift, respectively. The worker-hours required to set up the equipment and to complete each borehole and the borehole final depths are provided in table 4.

DRILLING COST COMPARISON

The cost of initial capital equipment including the drill, power unit, and drill rods amounted to $125,000 (table 5). This equipment was common to both drilling methods and consequently not considered in the cost effectiveness calculation. Equipment costs unique to each drilling method are shown in table 6. The cost comparison of rotary and in-hole motor drilling is exhibited in table 7.

CONCLUSIONS

In-hole motor drilling of horizontal boreholes for methane drainage in coal offered many advantages compared with rotary drilling. Inherently, drilling productivity was greater for in-hole motor drilling because it was not necessary to pull the drill string out of the borehole to change borehole direction or to sidetrack. As a result, 35 pct more of the available drilling time was occupied by drilling. This resulted in 11 more productive drilling shifts and an average of 26 ft more drilled per shift. It also took 572 fewer worker-hours to complete the second borehole using the in-hole motor. After prorating the cost of the low-maintenance piston pumps needed to supply water to the in-hole motor, the in-hole motor drilling cost was $4.22/ft less than the cost of rotary drilling.

TABLE 5. - Initial drilling equipment costs, both rotary and in-hole motor

	Quantity	Cost
Drilling equipment costs:		
Longyear drill and power unit	1	$93,304
BQ flush joint drill rod, 10 ft ea	160	14,720
BQ stainless steel drill rod, 10 ft ea	5	1,750
Hydraulic hose, 1-in ID, 100-ft sections	5	3,660
BQ water swivel	1	344
BQ fishing tool	1	166
BQ box, NQ pin subs	3	621
NQ box, BQ pin subs	3	621
Miscellaneous: Handtools, air line, hydraulic oil, etc	NAp	1,070
Total	NAp	116,256
Grouting standpipe, each borehole:		
Sandpiper (low pressure and high flow)	1	1,065
4-in-OD by 22-ft-long standpipe	1	177
Thor handheld air drill, grout mixer	1	3,400
6-in-OD reamer	1	747
Miscellaneous: Grout batch, wooden plug, low-pressure hose, 1-in valve, etc	NAp	149
Total	NAp	5,538
Gas handling, each borehole:		
During drilling:		
Bureau-designed gas-water separator	1	207
4-in-high pressure manual valve	1	301
BQ or 2-3/16-in-ID stuffing box	1	202
8-in-ID, 20-ft-long vent tubing	1	80
Pipe fittings	1	110
After hole completion, putting borehole on production:		
Tank, gas-water separator	1	159
4-in-high pressure manual valve	1	301
Pneumatic valve, 2-in ID	1	602
Venturi meter, 2-in ID	1	109
Float valves	1	360
Pipe fittings	2	120
Total	NAp	2,551
Grand total	NAp	124,345

NAp Not applicable.

TABLE 6. - Rotary and in-hole motor drilling equipment costs

	Quantity	Cost
Rotary drilling equipment:		
18-ft NQ drill collar	1	$409
3-7/16-in-OD centralizer	4	2,696
3-1/2-in-OD 3-bladed drag bit (inserts)	4	294
Drag bit locking bowl, shank, and sub	2	374
BQ 1-way check valve	1	491
Lease Sperry-Sun survey instrument[1]	3 mo	2,841
Miscellaneous	NAp	406
Total	NAp	7,511
In-hole motor drilling equipment:		
Pumping system:		
Kerr triplex pump with motor	2	15,719
High-pressure relief valves, control valves, pulsators, etc.	2 ea.	3,653
High-pressure mechanical water flowmeter	1	356
Total	Nap	19,728
Drilling accessories:		
NQ 1-way check valve	1	638
3-1/2-in-OD tricone roller bits	4	676
Lease Sperry-Sun survey instrument[1]	2 mo	1,892
Lease Sperry-Sun extension bars, 1-1/2-in-OD	2 mo	249
Total	NAp	3,455
Leasing Navi-Drill and accessories:		
2-3/4-in Navi-Drill in-hole motor	2 mo	11,000
Deflection shoe	2 mo	600
Orienting sub	2 mo	120
Mule shoe	2 mo	80
Total	NAp	11,800

NAp Not applicable. [1]Includes mechanical device, camera, protective case.

TABLE 7. - Cost comparison of the two drilling methods

	Rotary	In-hole motor
Direct costs:		
Drilling equipment[1]	$7,511	[2]$7,401
Lease Navi-Drill and accessories (2 mo)	NAp	11,800
Reconditioning equipment, parts	1,375	[3]8,371
Drilling and maintenance labor	18,249	11,312
Payroll overhead[4]	9,490	5,882
Power	354	718
Indirect costs[5]	2,944	2,952
Total cost	39,923	48,436
Total drilled ft	1,536	2,225
Cost per foot drilled[6]	$25.99	$21.77

NAp Not applicable. [1]Includes only equipment unique to each method.

[2]The in-hole motor equipment cost was calculated by dividing the cost of the pumping system (shown in table 6) by its minimum useful life of five boreholes and adding the cost of the drilling accessories.

[3]$7,371 to recondition 2 Navi-Drills and $1,000 to repair electrohydraulic drill.

[4]Includes all miner benefits.

[5]15 pct of drilling and maintenance labor and reconditioning equipment costs.

[6]Initial drilling equipment costs provided in table 5 are not included.

REFERENCES

1. Hagood, D. W., R. C. Pate, and J. W. Stevenson. Methane Control in an Advancing Section of an Underground Coal Mine (contract S0395033, Jim Walters Resources, Inc.). BuMines OFR 94-84, 1983, 39 pp.

2. Finfinger, G. L., and J. Cervik. Review of Horizontal Drilling Technology for Methane Drainage From U.S. Coalbeds. BuMines IC 8829, 1980, 20 pp.

3. Deul, M., and J. Cervik. Methane Drainage in the Pittsburgh Coalbed. Paper in XVII International Conference of Mining Safety Research (Varna, Bulgaria, Oct. 3-7, 1977), pp. 9-15; available from S. J. Kravits, Pittsburgh Res. Cent., BuMines, Pittsburgh, PA.

4. Prosser, L. J., Jr., G. L. Finfinger, and J. Cervik. Methane Drainage Study Using an Underground Pipeline, Marianna Mine 58. BuMines RI 8577, 1981, 29 pp.

5. Oyler, D. C., and W. P. Diamond. Drilling a Horizontal Coalbed Methane Drainage System From a Directional Surface Borehole. BuMines RI 8640, 1982, 50 pp.

6. Cervik, J., H. H. Fields, and G. N. Aul. Rotary Drilling Holes in Coalbeds for Degasification. BuMines RI 8097, 1975, 21 pp.

7. Stenberg, M., and L. Edling. Introduction to Directional Drilling Using the Navi-Drill, An Operation Manual. Boyles Bros. Drilling Co., Salt Lake City, UT, 1983, 30 pp.

8. Thakur, P. C., and W. N. Poundstone. Horizontal Drilling Technology for Advance Degasification. Min. Eng. (N.Y.), v. 32, No. 6, 1980, pp. 676-680.

9. NL Sperry-Sun (Oklahoma City, OK). Magnetic Directional Single Shot Operating Instructions. 1972, 12 pp.

APPENDIX A.--SURVEYING PROCEDURES

READING FILM DISKS

The methodology for reading film disks for inclination, bearing, and tool face direction when surveying with NL Sperry-Sun's 120° single-shot directional survey instrument is as follows:

1. Reading survey disk for inclination and bearing at survey depth:

A. Read inclination from horizontal inclination lines at bull's-eye. Each horizontal inclination line represents 2° (fig. A-1*A*).

B. Read bearing from vertical bearing lines at bull's-eye. These are the single-digit vertical lines 1 through 9 (10° through 90°) with SW, SE, NW, or NE designation (fig. A-1*A*). Correct for magnetic declination.

2. Reading survey disk for tool face direction during in-hole motor drilling (remember, survey instrument was aligned with deflection shoe so that scribe line would correspond directly with tool face direction):

A. Place survey disk on reader scale (fig. A-1*B*), with the thinnest copper margin facing up (fig. A-1*C*).

B. Position disk so that bull's-eye circle is centered in reader circle with crosshairs lined up with hole direction line.

C. Rotate disk until highest marked inclination line is located on top portion of reader circle toward the hole direction arrow.

D. Finally, move disk up or down so that crosshairs are lined up with 90° left and right.

E. Read tool face direction by extending scribe line to reader scale, 0° to 180° left or right. (To correct for photographic effects of the survey

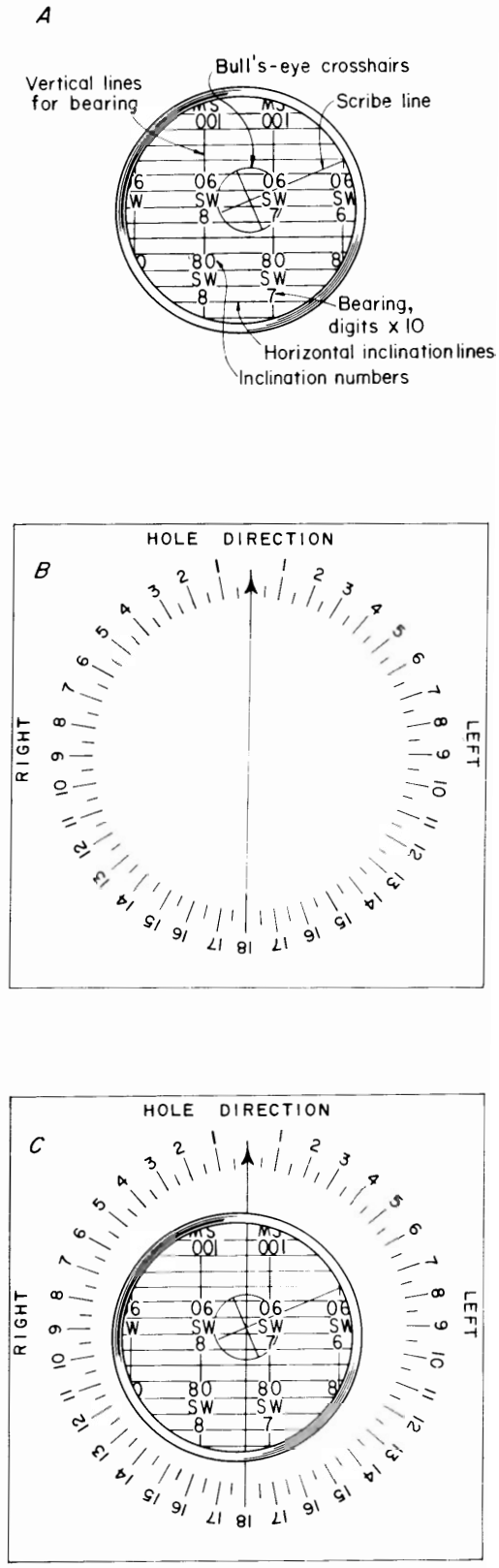

FIGURE A-1. - Reading film disks.

instrument camera, left is right and right is left on the reader circle.) In figure A-1*C*, tool face direction is about 67° left.

PROCEDURE FOR ALIGNING SURVEY HARDWARE, ORIENTING SUB, AND DEFLECTION SHOE TO READ TOOL FACE DIRECTION DIRECTLY

To survey for tool face direction directly, the survey hardware, orienting sub, and deflection shoe must be aligned so that the scribe line and tool face direction correspond. The survey hardware includes the survey instrument, wireline-attached protective case, orienting snubber, three 6-ft-long, 1-3/8-in-OD extension rods, and mule shoe (fig. A-2). To obtain the desired relation between tool face direction and scribe line, the in-hole motor is first laid on cribs with tool face direction at 0° or facing up. Then the orienting sub is threaded on the back end or top end of the in-hole motor hand-tight. The snubber is epoxied and threaded to the female end of the already epoxied and threaded extension rods. The mule shoe is then threaded onto the male end of the extension rods hand-tight. The T-head or arrowhead on the snubber is aligned with the key slot in the mule shoe, which in turn locates the scribe line (9).[1]

To survey for tool face alignment (scribe line), the Sperry-Sun survey instrument is fitted onto the snubber hanger or arrowhead and is placed in the protective case, which is then threaded onto the snubber (fig. A-3). If the arrowhead on the snubber and the key slot on the mule shoe are facing up or at 0° then the scribe line on a developed disk would correspond to 0°. Next, the orienting sub is threaded farther onto the in-hole motor until the key is facing up (figures A-4 and A-5).

Slight adjustments are made on the mule shoe and orienting sub until the scribe line on the survey disk corresponds exactly with the tool face at 0°. Identifying marks are then placed on the orienting sub and top sub, and on the mule shoe and the extension rod it is threaded onto. The components are then

[1]Underlined numbers in parentheses refer to items in the list of references preceding this appendix.

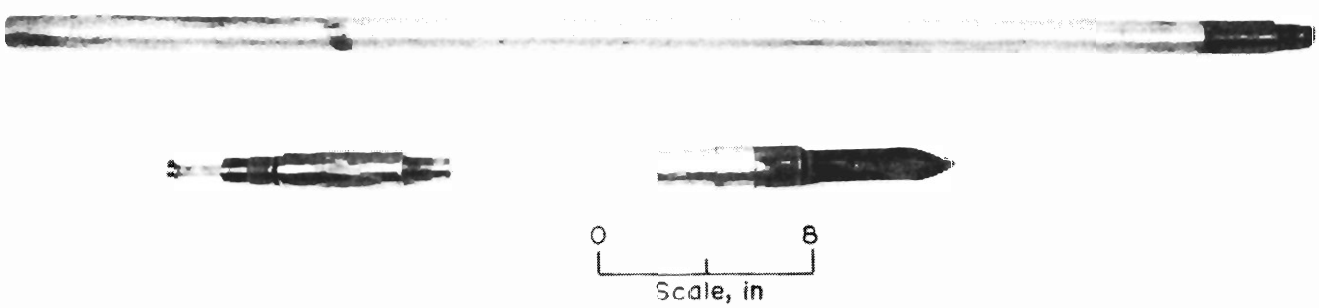

FIGURE A-2. - Survey hardware. Protective case (top), snubber (bottom left), mule shoe (bottom right). (Not shown are extension rods and survey instrument.)

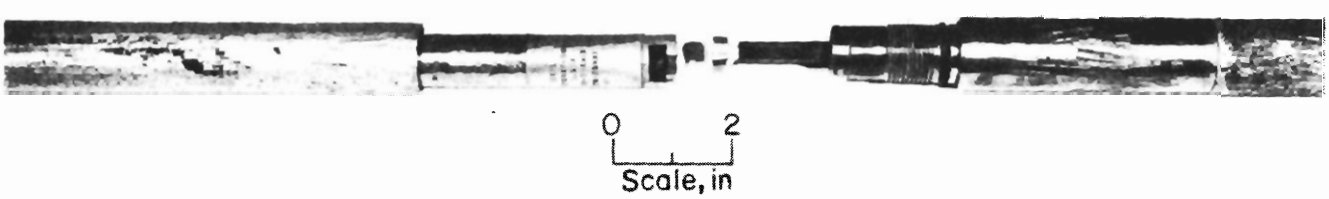

FIGURE A-3. - NL Sperry-Sun protective case, survey instrument, and snubber (left to right).

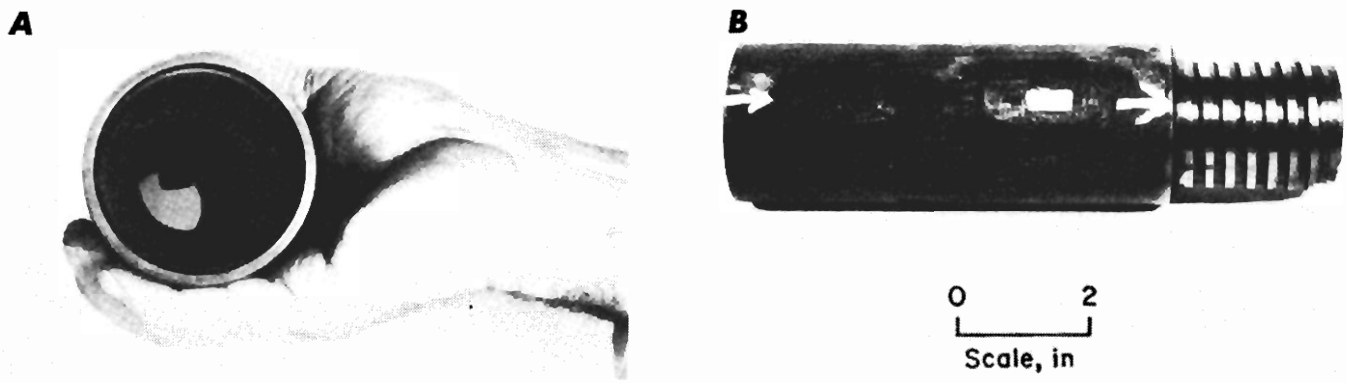

FIGURE A-4. - Orienting sub. *A*, End view, key; *B*, arrow showing key orientation.

FIGURE A-5. - Alignment of snubber, mule shoe, orienting sub, and deflection shoe (left to right).

unthreaded, epoxied, and then threaded back together with the identifying marks in line. Four surveys are made after rotating the in-hole motor (tool face) from 0° to 360° at 90° increments to verify that the scribe line correlates exactly with tool face direction. The alignment of the snubber, mule shoe, orienting sub, and deflection shoe used to survey for tool face directly is given in figure A-5. The method of assembling and the final alignment of these components may vary according to the practice of the driller. The main point is to determine the relation of the deflection shoe and the scribe line (9).

BOREHOLE SURVEYING

1. Fit a lead tattletale (1/4-in OD, 3/4-in in length) into the hole located in the slot of the mule shoe (fig. A-6).

2. Prepare the survey instrument (set timer and load instrument with film disk) and fit onto snubber. Then place wireline-attached protective case over survey instrument and thread onto snubber (fig. A-3). Pump the surveying package down the drill rods.

3. Remove the survey package from the borehole at the predetermined time. Look for a key imprint left on the tattletale. This indicates that a good survey was completed (fig. A-6) and the survey disk can be developed. Finally, replace the tattletale with a new lead tattletale for the next survey.

SETTING TOOL FACE DIRECTION USING THE TOOL FACE SETTING GUIDE

1. Remove the chalk line on the drill rod (0°, as in paragraph 3, below),

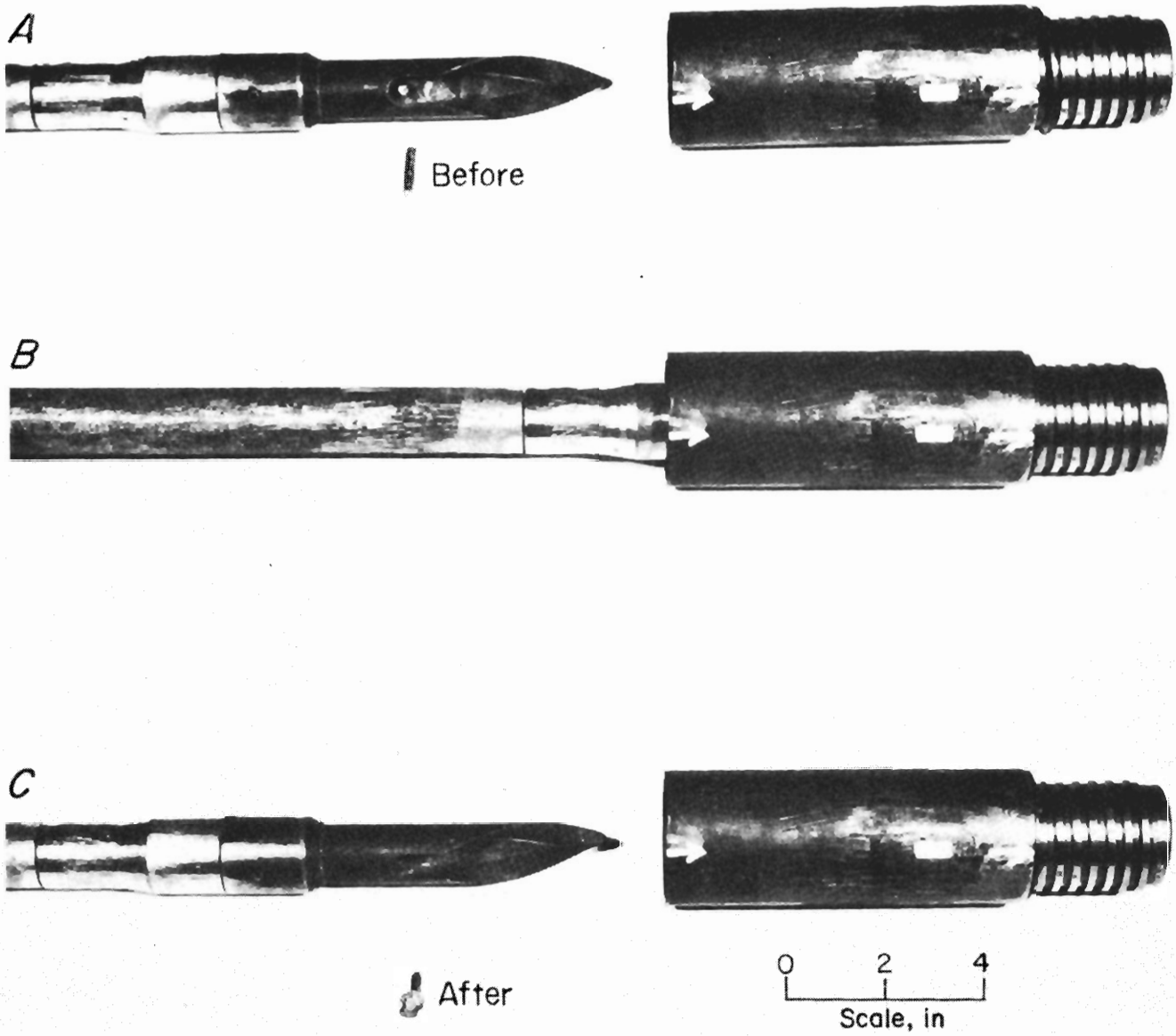

FIGURE A-6. - Lead tattletale before and after completing a borehole survey. *A*, New tattletale installed before survey; *B*, survey package (mule shoe) impacts orienting sub during survey; *C*, key imprint from orienting sub left on tattletale after survey is completed.

referencing the previous tool face setting, and transfer the previous tool face setting marked on the tool face setting guide (0° to 180° left or right) onto the drill rod (fig. A-7).

2. Mark the new tool face direction on the tool face setting guide. Using the tool face setting guide as a reference, rotate the drill rod with a pipe wrench clockwise (so as not to loosen any drill rod joints) to the new tool face direction (fig. A-7).

3. Run a chalk line dead center or at 0° tool face, down the length of the drill rod. While drilling, keep in mind the tool face setting it represents. The driller can monitor the position of this chalk line much better than if it were placed on the drill rod at the actual tool face (0° to 180° left or right). The chalk line is placed only as a precaution against reactive torque that might occur, causing slight rotation of the drill rods if material other than coal is encountered.

FIGURE A-7. - Tool face setting guide.

APPENDIX B.--DEFLECTION RATE COMPONENTS AND BIT PROJECTIONS

A RULE-OF-THUMB METHOD FOR CALCULATING DEFLECTION RATE COMPONENTS FROM AN ESTABLISHED DEFLECTION RATE MAGNITUDE

A rule-of-thumb for determining the break down of the deflection rate magnitude for quadrants 1 and 2 (table B-1) was to calculate the ratio of the tool face setting with 90° and then multiply by the deflection rate magnitude. This number equaled the horizontal component (right or left) of the deflection rate magnitude. The build rate or vertical component then equaled the deflection rate magnitude minus the horizontal component.

To calculate the horizontal component of the deflection rate magnitude for tool face settings in quadrants 3 and 4, the tool face setting was subtracted from 180°, then divided by 90°, and finally multiplied by 0.10° per foot. The vertical component of the deflection rate was simply the horizontal component subtracted from the deflection rate magnitude. A table of calculated deflection rates corresponding to tool face settings can be found in the main text (table 3).

Examples of calculating vertical and horizontal components corresponding to tool face settings follow. Conditions are

Interval drilled.....	337-367 ft
Survey depth.....	337 ft
Inclination at survey depth.....	87.7°
Bearing at survey depth..	S 84.5° W
Tool face.....	130° right
Bit depth.....	367 ft
Material drilled.....	Coal

<u>One-step vertical projection of bit at 367 ft:</u>

Established deflection rate vertical component of tool face at 130° right = -0.044° per foot (table 3). Effect on borehole trajectory in vertical plane from survey depth to bit depth = -0.044° per foot × 30 ft = -1.32°.

Inclination at survey depth..	87.70°
Change in inclination, survey depth to bit depth.....	-1.32°
Projected inclination at bit depth.....	86.38°

TABLE B-1. - Calculating deflection rate components

Tool face setting	Quadrant No. (fig. 11)	Deflection rate components			
		Calculation		Horizontal component, degree per foot	Vertical component, degree per foot
		Horizontal component	Vertical component		
30° right.	1	[1]$\frac{30}{90}$ × 0.10.....	[2]0.10 - 0.033	0.033 right	0.067, build.
30° left..	2	Same as 30° right.....	NAp.....	0.033 left.	0.067, build.
145° right	4	[3][(180 - 145)/90] × 0.10	[2]0.10 - 0.039	0.039 right	0.061, drop.
145° left.	3	Same as 145° right.....	NAp.....	0.039 left.	0.061, drop.

NAp Not applicable. [1]$DRHC = \frac{TFS}{90} \times DR$.

[2]DRVC = DR - DRHC. [3]$DRHC = \frac{180 - TFS}{90} \times DR$.

NOTE.--TFS = tool face setting; DR = deflection rate magnitude.

Angle averaging to project change in vertical position from survey depth to bit depth:

$$\text{Vertical deviation} = \sin\left(\left[\left(\begin{matrix}\text{inclination at beginning}\\ \text{of interval}\end{matrix} - \begin{matrix}\text{horizontal inclination}\\ \text{of } 90^\circ\end{matrix}\right) + \left(\begin{matrix}\text{projected inclination}\\ \text{at end of interval}\end{matrix} - \begin{matrix}\text{horizontal inclination}\\ \text{of } 90^\circ\end{matrix}\right)\right] \Big/ 2\right) \times \begin{matrix}\text{interval}\\ \text{drilled}\end{matrix}$$

$$= \sin\left([(87.7^\circ - 90^\circ) + (86.38^\circ - 90^\circ)]/2\right) \times 30 \text{ ft}$$

$$= -1.54 \text{ ft.}$$

Therefore, projected change in vertical position from survey depth to bit depth is -1.54 ft, drop. (Refer to figure 5*B* in the main text, vertical deviation plot of borehole 2.)

One-step horizontal bit projection at a depth of 367 ft:

Horizontal component of deflection rate of tool face at 130° right = 0.056° per foot right. Effect on borehole trajectory in horizontal plane from survey depth to bit depth = 0.056° per foot × 30 ft = 1.68° right.

Bearing at survey depth.....	S 84.5° W
Change in bearing, survey depth to bit depth	+1.68° right
Projected bearing at bit depth.....	S 86.18° W

Angle averaging:

$$\text{Sin}\left(\left[\left(\begin{matrix}\text{bearing at beginning}\\ \text{of interval}\end{matrix} - \begin{matrix}\text{west bearing,}\\ \text{S } 90^\circ \text{ W}\end{matrix}\right) + \left(\begin{matrix}\text{projected bearing}\\ \text{at end of interval}\end{matrix} - \begin{matrix}\text{west bearing,}\\ \text{S } 90^\circ \text{ W}\end{matrix}\right)\right] \Big/ 2\right) \times \begin{matrix}\text{interval}\\ \text{drilled}\end{matrix}$$

= projected change in latitude from beginning to end of interval

$$= \sin\left([(84.5^\circ - 90^\circ) + (86.2^\circ - 90^\circ)]/2\right) \times 30 \text{ ft}$$

= -2.43 ft, change in latitude.

$$\text{Projected change in departure} = (\text{interval length}^2 - \text{change in latitude}^2)^{1/2}$$

$$= (30^2 - -2.43^2)^{1/2}$$

= -29.90 ft (west departure is negative).

EXAMPLES OF TWO TYPES OF TWO-STEP VERTICAL BIT PROJECTIONS

Type A two-step vertical projection of 517 ft:

A type A two-step vertical bit projection (tool face direction is not changed for next drilling interval) is very similar to a one-step vertical projection calculation, as shown here. Conditions are

Intervals drilled.....	437-467 ft, 467-517 ft
Survey depth.....	437 ft
Inclination at survey depth..	88.0°
Tool face.....	65° left

Deflection rate vertical component for tool face of 65° left = 0.028° per foot build (table 3). Projected change in inclination from 437 to 517 ft = +0.028° per foot × 80 ft = +2.24°.

Inclination at survey depth.....	88.0°
Projected change in inclination.....	+2.24°
Projected inclination at 517 ft.....	90.24°

Change in vertical position from depth of 437 to 517 ft by angle averaging:

$$\text{Sin}\ ([(88.0° - 90°) + (90.24° - 90°)]/2) \times 80\ \text{ft}$$

= -1.23 ft drop, 437 to 517 ft (fig. 5*B*).

Type B two-step vertical bit projection:

At a bit depth of 717 ft, drilling stopped and an inclination of 89.1° at the survey depth of 687 ft was determined. Using the vertical deflection rate of +0.022° per foot build for a tool face of 70° left, the projected inclination at 717 ft was calculated to be 89.8°. The one-step vertical projection produced a 0.29-ft drop in vertical position during the already drilled interval of 687 to 717 ft. The next borehole interval of 717 to 757 ft was to be drilled with a tool face setting of 110° left. Therefore, the type B two-step vertical projection was calculated as shown:

Projected inclination at 717 ft.....	89.80°
Projected change in inclination, 717 to 757 ft (0.022° per foot × 40 ft)....	-.88°
Projected inclination at 757 ft.....	88.92°

Change in vertical position from depth of 717 to 757 ft by angle averaging:

$$\text{Sin}\ ([(89.8° - 90°) + (88.9° - 90°)]/2) \times 40\ \text{ft}$$

= -0.45 ft drop, 717 to 757 ft (fig. 5*B*).

SIDETRACKING WITH AN IN-HOLE MOTOR AND SIDETRACK PROJECTIONS

The first step to sidetracking is to pull the in-hole motor back to a suitable borehole depth where the sidetrack can begin. Sidetracks can be started where borehole inclination is close to or greater than 90° and where the borehole is close to the roof. The sidetrack will be worn below the existing borehole. Once the in-hole motor is placed where the sidetrack is to begin, it is essential to take a survey so that the tool face can be set accurately at 180°. Sidetracking is then begun by completing three 10-ft reaming passes from the beginning of the sidetrack to 10 ft into the sidetrack or new borehole. In other words, the first 10-ft pass is made, then the drill rod is pulled back, and the second pass is completed, followed by the third. Each of the three passes should take about 30 min, in order to wear away the bottom side of the borehole slowly and effectively. The in-hole motor drilling parameters during reaming are 700- to 1,200-lb thrust and 700- to 800-r/min rotation. These are comparable to the rotary drilling parameters during reaming (table 1 in main text). From the beginning of the first reaming pass to the end of the third pass, there will be a gradual increase in the volume of coal cuttings and a darkening in color in the drill effluent. The bottom side of the borehole is being worn deeper and deeper, from the completion of the first to the third reaming pass (fig. B-1). After the third pass has been completed, a drill rod is added and the fourth reaming pass can begin. Caution must be taken to advance the in-hole motor slowly during the beginning of the fourth pass to prevent jumping over the kerf that was worn during the first three reaming passes. If this does happen, the face of the kerf will be rounded off and the sidetracking procedure might have to be repeated at another borehole depth.

Five sidetracks were completed with the in-hole motor. As experienced in drilling the first sidetrack from a depth of

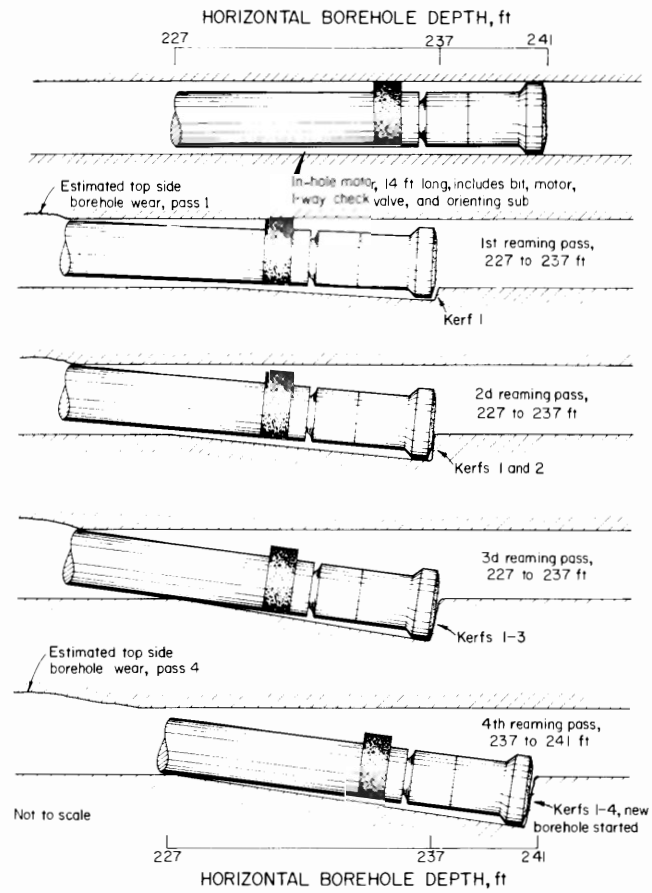

FIGURE B-1. - Sidetracking with an in-hole motor.

227 to 241 ft, the fourth pass needed to be only 4 ft long to complete the sidetrack (fig. B-1). Thrust levels were increased substantially during the fourth reaming pass to maintain the penetration rates of passes one through three. It is believed that the decrease in penetration rate in the fourth pass resulted because the last 4 ft of the rear end of the in-hole motor were binding against the high side of the old borehole (fig. B-1). This resistance continued until the 4-ft-long fourth reaming pass was completed and the in-hole motor and bit, which were 14 ft long, occupied the 14-ft sidetrack. Consequently, a maximum bending stress occurred on the first BQ rod directly behind the in-hole motor where it was threaded into the orienting sub.

By the completion of the fourth reaming pass, the drilling effluent will consist entirely of coal cuttings in suspension.

Before drilling is resumed, a final check is made to ensure that the sidetrack was successful. All rotation and thrust are shut off. Then the in-hole motor is thrust slowly (about 400 to 500 lb) forward. If a new borehole has been started, the end of the new borehole will be hit immediately and a rapid increase in thrust pressure will be observed at the drill. When the test is successful, backward thrust is applied immediately to prevent the drill rod from breaking in the borehole.

The following are examples of sidetrack projections: The inclination at 403 ft was previously surveyed as 89.8°. The inclination at 407 ft was projected to be 90.0°. When the beginning of the sidetrack occurred between previously surveyed depths or locations, the inclination was estimated using a one-step projection technique. For the 14 ft of completed sidetrack, the vertical deflection rate of 0.10° per foot drop for a tool face of 180° was assumed, and therefore, a drop in inclination of -1.4° could be expected. Knowing the inclination at the beginning of the sidetrack and estimating the inclination at the end of the sidetrack (inclination at beginning of sidetrack minus 1.4°), the effect of vertical position from the sidetrack was determined. This projection is called a one-step sidetrack vertical projection. The one-step sidetrack projection for the sidetrack from 407 to 421 ft was a 0.17-ft drop in vertical position (fig. 5*B*). The next drilling interval of 421 to 437 ft was going to be drilled with a tool face setting of 120° left. Using the projected inclination at 421 ft, a two-step sidetrack vertical projection was made for the bit at 437 ft (fig. 5*B*). Drilling continued to a depth of 437 ft, and another survey was taken, followed by one- and two-step vertical projection at 437 and 467 ft. The previous one-step sidetrack vertical projection at 421 ft was found to be within one borehole diameter of the plotted vertical position. Later, as drilling advanced, the sidetrack projections at 437 ft was determined to be 0.3 ft from the plotted trajectory. The sidetrack vertical projection technique was used during each of the three remaining sidetracks at depths of 821, 1,187, and 1,427 ft (fig. 5*B*).

APPENDIX C.--TIMESTUDIES OF EACH BOREHOLE

TABLE C-1. - Rotary drilling timestudy

Date	Work shift			Equipment operating time, h	Actual drilling, min	Surveying, min	Stabilizer position change, min	Available drilling time, min	Downtime, min	Portal to portal, min	Footage drilled
	Length, min	Crew size	Worker-hours								
February:											
3.....	480	3	24	5.00	45	100	0	145	135	100	70
4.....	480	3	24	5.00	20	108	89	217	120	120	70
5.....	480	3	24	5.67	6	29	290	325	140	120	10
8.....	480	2	16	5.50	24	71	30	125	110	100	36
9.....	480	2	16	3.67	152	63	0	215	135	135	60
10.....	480	2	16	6.50	255	60	0	315	90	90	60
11.....	480	2	16	4.75	185	60	0	245	135	100	60
16.....	480	3	24	5.75	60	30	0	90	115	100	40
17.....	480	3	24	5.17	55	35	185	275	130	130	20
18.....	480	3	24	5.17	140	50	120	310	105	105	30
19.....	480	3	24	5.33	125	175	0	300	160	140	40
22.....	480	3	24	5.00	115	130	0	245	140	140	40
23.....	480	2	16	.42	10	0	0	10	335	115	10
24.....	480	2	16	1.50	35	60	0	95	105	105	20
25.....	480	3	24	5.75	155	110	0	265	105	105	40
26.....	480	2	16	6.00	105	25	0	130	120	105	40
Total..	7,680 (16 shifts)	NAp	328	76.18	1,487	1,106	714	3,307	2,563	1,810	646
March:											
1.....	480	3	24	5.75	40	65	230	335	40	105	20
2.....	480	3	24	6.25	165	90	90	345	40	95	90
4.....	480	3	24	5.00	140	100	0	240	135	105	60
5.....	480	3	24	5.75	30	0	280	310	45	125	20
8.....	480	3	24	5.00	140	70	0	210	155	115	30
9.....	480	4	32	5.00	185	105	0	290	100	90	20
10.....	480	3	24	6.00	235	65	0	300	80	100	50
11.....	480	2	16	6.00	0	30	300	330	55	95	0
12.....	480	2	16	5.50	150	100	30	280	120	80	30
15.....	480	4	32	6.00	0	0	320	320	70	90	0
16.....	480	4	32	5.50	175	145	0	320	65	95	80
17.....	480	4	32	6.00	220	125	0	345	45	90	70
18.....	480	3	24	5.50	215	120	0	335	30	115	30
19.....	480	3	24	6.00	210	65	0	275	100	105	20
22.....	480	4	32	5.00	0	0	300	300	75	105	0
23.....	480	3	24	5.75	200	35	0	235	115	130	40
24.....	480	3	24	6.00	195	130	0	325	60	95	20
25.....	480	4	32	6.00	230	40	0	270	105	105	30
26.....	480	3	24	6.00	10	30	250	290	95	95	10
29.....	480	4	32	6.00	0	0	230	230	175	75	0
30.....	480	4	32	.00	0	0	0	0	370	110	0
31.....	480	4	32	6.25	145	40	180	365	15	100	70
Total..	10,560 (22 shifts)	NAp	584	120	2,685	1,355	2,210	6,250	1,950	2,220	690
April:											
2.....	480	3	24	0	0	0	0	0	380	100	0
5.....	480	4	32	6.25	265	100	0	365	20	95	90
6.....	480	4	32	5.50	0	40	220	260	90	130	0
7.....	480	4	32	6.00	95	0	225	350	15	115	10
8.....	480	4	32	5.75	250	70	0	320	40	120	50
9.....	480	4	32	3.00	0	0	140	140	15	100	0
12.....	480	3	24	6.00	0	0	265	265	110	105	0
13.....	480	4	32	5.00	0	0	280	280	105	95	0
15.....	480	4	32	5.5	0	0	165	165	180	135	0
16.....	480	4	32	2.0	70	0	0	70	315	95	20
20.....	480	4	32	3.5	170	35	0	205	120	155	30
Total..	5,280 (11 shifts)	NAp	336	48.5	850	245	1,325	2,420	1,615	1,245	200
Grand total.	49 shifts	NAp	1,248	245	5,022	2,706	4,249	11,977	6,268	5,275	1,536
pct of ADT[1]	NAp	NAp	NAp	NAp	41.93	22.59	35.48	NAp	NAp	NAp	NAp
pct of TT[2].	NAp	Nap	NAp	NAp	21.35	11.51	18.07	50.92	26.65	22.43	NAp

NAp Not applicable. [1]Percent of available drilling time. [2]Percent of total time.

TABLE C-2. - In-hole motor drilling timestudy

Date	Work shift			Equipment operating time, h	Actual drilling, min	Surveying, min	Stabilizer position change, min	Available drilling time, min	Downtime, min	Portal to portal, min	Footage drilled
	Length, min	Crew size	Worker-hours								
December:											
7.....	480	3	24	2.25	90	30	NAp	120	270	90	55
10.....	240	3	12	3.00	150	30	NAp	180	0	60	15
13.....	480	3	24	4.75	205	40	NAp	245	145	90	45
14.....	480	2	16	5.25	180	95	NAp	275	100	105	86
15.....	480	2	16	6.00	225	110	NAp	335	30	115	74
16.....	480	3	24	4.00	200	40	NAp	240	120	120	30
17.....	480	2	16	6.00	220	100	NAp	320	85	75	50
20.....	480	3	24	3.00	100	60	NAp	160	185	135	20
21.....	480	3	24	5.00	180	60	NAp	240	150	90	30
Total..	4,080 (9 shifts)	NAp	180	39.25	1,550	565	NAp	2,115	1,085	880	405
January:											
3.....	480	2	16	5.00	140	45	NAp	185	205	90	30
4.....	480	2	16	5.00	220	70	NAp	290	110	80	70
5.....	480	2	16	6.00	260	40	NAp	300	90	90	40
6.....	480	2	16	6.00	275	70	NAp	345	45	90	70
7.....	480	3	24	6.00	50	25	NAp	75	310	95	20
14.....	480	3	24	4.50	0	30	NAp	30	325	125	0
17.....	480	2	16	6.00	140	85	NAp	225	165	90	80
18.....	480	2	16	6.00	150	75	NAp	225	135	120	30
19.....	480	2	16	6.00	280	75	NAp	355	20	105	70
20.....	480	2	16	4.00	170	75	NAp	245	130	105	90
21.....	480	2	16	4.00	195	60	NAp	255	135	90	60
26.....	480	2	16	6.00	295	65	NAp	360	30	90	120
27.....	480	2	16	5.00	260	55	NAp	315	50	115	120
28.....	480	2	16	6.00	235	70	NAp	305	70	105	70
31.....	480	2	16	5.50	0	0	NAp	0	390	90	0
Total..	7,200 (15 shifts)	NAp	256	81.0	2,670	840	NAp	3,510	2,210	1,480	870
February:											
1.....	480	2	16	5.00	0	0	NAp	0	375	105	0
2.....	480	2	16	5.00	110	40	NAp	150	225	105	20
3.....	480	2	16	5.00	155	20	NAp	175	210	95	20
4.....	480	2	16	5.00	250	55	NAp	305	80	95	70
7.....	480	2	16	6.00	295	85	NAp	380	0	100	110
8.....	480	2	16	6.00	275	70	NAp	345	40	95	120
9.....	480	2	16	6.00	180	60	NAp	240	160	80	50
11.....	480	2	16	6.25	130	35	NAp	165	215	100	60
14.....	480	2	16	4.25	190	65	NAp	255	90	135	70
15.....	480	2	16	2.00	80	35	NAp	115	260	105	20
16.....	480	2	16	5.00	245	40	NAp	285	110	85	60
18.....	480	2	16	5.25	230	65	NAp	295	80	105	90
22.....	480	2	16	5.50	275	45	NAp	320	60	100	100
23.....	480	2	16	6.00	295	90	NAp	385	0	95	60
25.....	480	2	16	5.50	335	45	NAp	380	0	100	100
Total..	7,200 (15 shifts)	NAp	240	77.75	3,045	750	NAp	3,795	1,905	1,500	950
Grand total.	39 shifts	NAp	676	198	7,265	2,155	NAp	9,420	3,985	5,200	2,225
pct of ADT[1]	NAp	NAp	NAp	NAp	77.00	23.00	NAp	NAp	NAp	NAp	NAp
pct of TT[2].	NAp	NAp	NAp	NAp	39.31	11.66	NAp	50.97	28.13	20.89	NAp

NAp Not applicable. [1]Percent of available drilling time. [2]Percent of total time.

☆U.S. GPO: 1985-505-019/20,015

INT.-BU.OF MINES,PGH.,PA. 27926