RI 9238

REPORT OF INVESTIGATIONS/1989

Rotary Drilling Techniques Used in the Beckley Coalbed

By Tobias W. Goodman

BUREAU OF MINES

UNITED STATES DEPARTMENT OF THE INTERIOR

Report of Investigations 9238

Rotary Drilling Techniques Used in the Beckley Coalbed

By Tobias W. Goodman

UNITED STATES DEPARTMENT OF THE INTERIOR
Manuel L. Lujan, Jr., Secretary

BUREAU OF MINES
T S Ary, Director

Library of Congress Cataloging in Publication Data:

Goodman, Tobias W.
Rotary drilling techniques used in the Beckley coalbed.

(Report of investigations; 9238)

Bibliography: p. 11.

Supt. of Docs. no.: I 28.23:9238.

1. Coalbed methane drainage—West Virginia—Rotary drilling. I. Title. II. Title: Beckley coalbed. III. Series: Report of investigations (United States. Bureau of Mines); 9238.

TN23.U43 [TN305] 622 s [622'.8] 88-600412

CONTENTS

ILLUSTRATIONS

TABLES

UNIT OF MEASURE ABBREVIATIONS USED IN THIS REPORT

cm	centimeter	L	liter
ft	foot	L/min	liter per minute
ft^3	cubic foot	lb	pound
ft^3/d	cubic foot per day	m	meter
$(ft^3/d)/ft$	cubic foot per day per foot	m^3	cubic meter
ft^3/gal	cubic foot per gallon	m^3/d	cubic meter per day
ft/min	foot per minute	$(m^3/d)/m$	cubic meter per day per meter
gal	gallon	m^3/L	cubic meter per liter
gal/min	gallon per minute	m/min	meter per minute
hp	horsepower	r/min	revolution per minute
in	inch	rad	radian
in/min	inch per minute	W	watt
kg	kilogram	yr	year

ROTARY DRILLING TECHNIQUES USED IN THE BECKLEY COALBED

By Tobias W. Goodman[1]

ABSTRACT

The U.S. Bureau of Mines used a contact drilling strategy with short-collared assemblies in order to rotary drill long horizontal methane drainage holes in the Beckley Coalbed near Glen Daniel, WV. By decreasing the thrust, and increasing the rotation of the drill bit when in contact with the roof and floor rock, assemblies with 1-ft (0.3-m), 10-ft (3-m), and 14-ft (4.3-m) long collars were made to deflect and stay in the coalbed. Successful application of this procedure resulted in holes drilled full length in coal with the original assembly including bit. The test assemblies deflected away from the original bearings of the holes during drilling and arced. Four holes were drilled to depths ranging from 478 ft (145.7 m) before the strategy was developed, to 4,034 ft (1,230 m) when the strategy was applied. Total length of the holes in coal was 8,590 ft (2,618 m). After 577 days the total methane captured by the holes was 221,600,000 ft^3 (6,276,000 m^3). The methane flow rate peaked at 805,000 ft^3/d (22,798 m^3/d), then decreased to stabilize at 670,000 ft^3/d (18,974 m^3/d) after 6 months.

[1]Mining engineer, Pittsburgh Research Center, U.S. Bureau of Mines, Pittsburgh, PA.

INTRODUCTION

The Bureau of Mines has used horizontal drilling technology to degasify portions of coalbeds since procedures to control bit trajectory in the vertical plane were introduced in 1972 (*1*).[2] These procedures were designed for the Pittsburgh Coalbed where they proved effective in staying within the coalbed. Three drilling projects demonstrated that commercial quantities of methane could be obtained from rotary drilled holes in the Pittsburgh Coalbed (*2-4*).

The rotary drilling technique is described in a Bureau report (*1*). The standard rotary drilling assembly that is recommended for degasification drilling consists of a drag bit, two centralizers, and an 18-ft (5.5-m) long drill collar (fig. 1). Vertical control is accomplished preferably by varying the drill bit thrust and rotation rates (drilling parameters) for small changes up to 2° (0.035 rad) in inclination. Larger changes are effected by removing a centralizer, or removing both the drill collar and a centralizer. One modification to this long-collared assembly is to remove the back centralizer in order to drill the soft lower benches found in the Pittsburgh (*4*) and Upper Sunnyside (*5*) coalbeds.

The 18-ft (5.5-m) NQ rod drill collar, which weighs 189 lb (85.7 kg), provides sufficient elastic bend when suspended between two centralizers in the standard assembly, or behind a centralizer in the modified assembly, to respond to control drilling parameters. Collars, 10- and 15-ft- (3.0- and 4.6-m) long, would be easier to use in the restricted underground environment. However, previous Bureau experience has indicated they do not respond to drilling parameters that lift the trajectory of the bit in the coalbed. They also may deflect away from the desired bearing of the hole. Weight adds inertia and rigidity to the standard assembly which tends to drill a more linear rather than an arcing hole. Linear holes are desirable because they can be planned so as not to interfere with mining plans.

The Beckley Coalbed is difficult to drill using control procedures. In a previous study in the Beckley Coalbed (*6*), the long-collared assembly (fig. 1) was used without success. The friable coalbed is much softer to drill than the Pittsburgh Coalbed, and overbreak of the hole caused the trajectory to lower unpredictably. Because of rolls in the coalbed, attempts to drill along the floor contact with the long assembly, even with the back centralizer removed, were unsuccessful and resulted in aborted holes. The holes were too short to dewater the site area, which was located in a synclinal trough that collected regional coalbed water. Hence, degasification was not as effective as planned.

The purpose of the current study was to drill long methane drainage holes in the Beckley Coalbed using short-collared drilling assemblies. The 18-ft (5.5-m) drill collar was eliminated from the assembly. The response of various short-collared assemblies to drilling parameters is known from tests conducted by the Bureau (*1*). Because of their configurations, gravity works to make these assemblies drill either upward or downward. This predictable behavior makes them useful in the control drilling technique, where certain short-collared assemblies are used to make large changes in the vertical trajectory of the hole. Since they are removed from the hole immediately after making a large change in vertical trajectory, the amount of experience with short-collared assemblies was less than desired. For example, nothing was known about the horizontal paths that they would follow, whether random because of deflection off inclusions, or to the right because of bit rotation (*1-8*).

[2]Italic numbers in parentheses refer to items in the list of references at the end of this report.

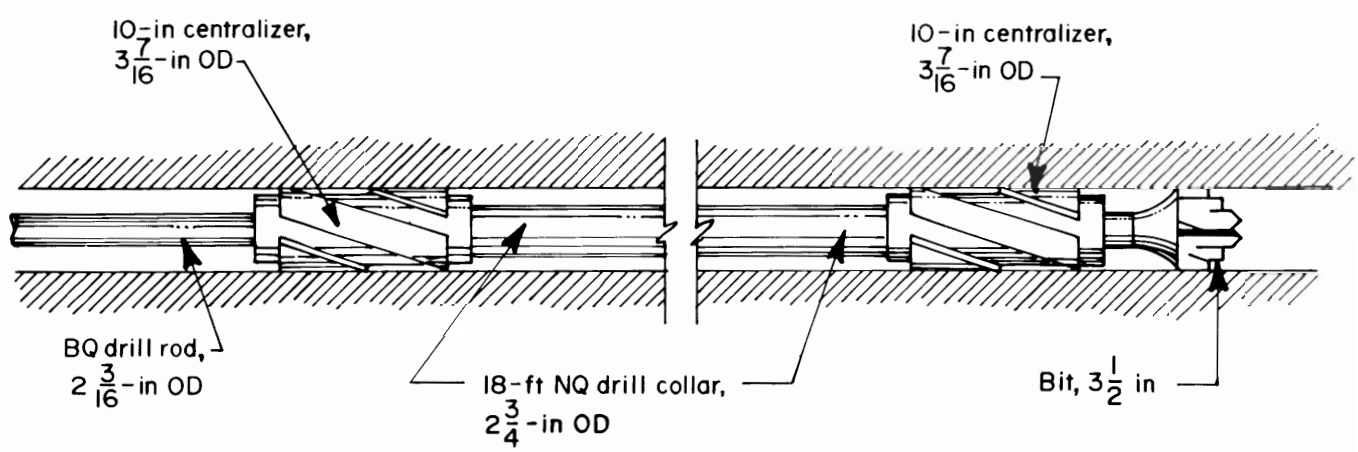

Figure 1.—Standard rotary drilling assembly with 18-ft collar.

ACKNOWLEDGMENTS

The cooperation of Jim Page, mine engineer, designed and installed underground degasification pipeline; David Fitzpatrick, mining engineer, coordinated the program; and Robert Adkins, coal miner, driller, helped to drill the holes of the Beckley Coal Mine, Glen Daniel, WV is greatly appreciated.

TEST PROGRAM

DESCRIPTION OF STUDY AREA

The study was located at the face of 2 NE mains, which contains seven headings and a ventilation shaft four breaks from the face (fig. 2). The area was idle for 4 yr after development, while thicker coal at other sections of the mine was worked. In the area the coalbed is 3-1/2 to 4 ft (1.1 to 1.2 m) thick, and the overburden is 520 ft (159 m). The regional dip of the coalbed is -1.5° (0.3 rad) to the northwest but local bedding rolls with slopes of 4° (0.07 rad) are frequent.

The stratigraphic column includes sandstones and shales (fig. 3). The immediate floor over the test area is a sandy shale or interbedded shale and sandstone. This contrasts with the fireclay or soft shale coalbed floors occurring at many degasification sites. The roof is more complex, either interbedded shale and sandstone, laminated shale, or sandstone in different locations across the test area. Coalbed discontinuities such as clay channels or washouts are commonly met during mining in the Beckley Coalbed. In fact, washouts caused relocation of entries in two panels adjacent to the test site.

The mine is located on the southeast flank of a regional syncline, but far from the axis of the trough (fig. 2) where dewatering problems might occur such as at the previous Beckley Coalbed study (*6*).

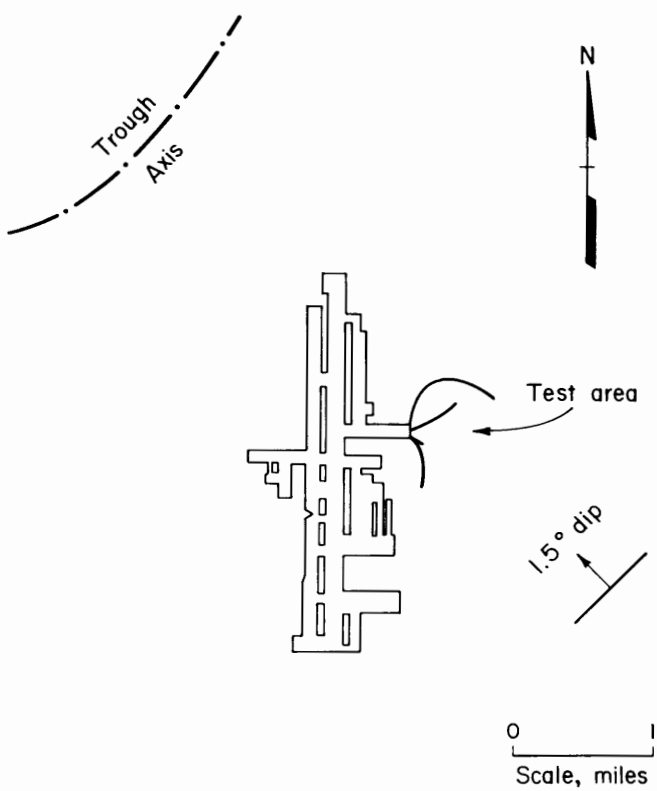

Figure 2.—Degasification site.

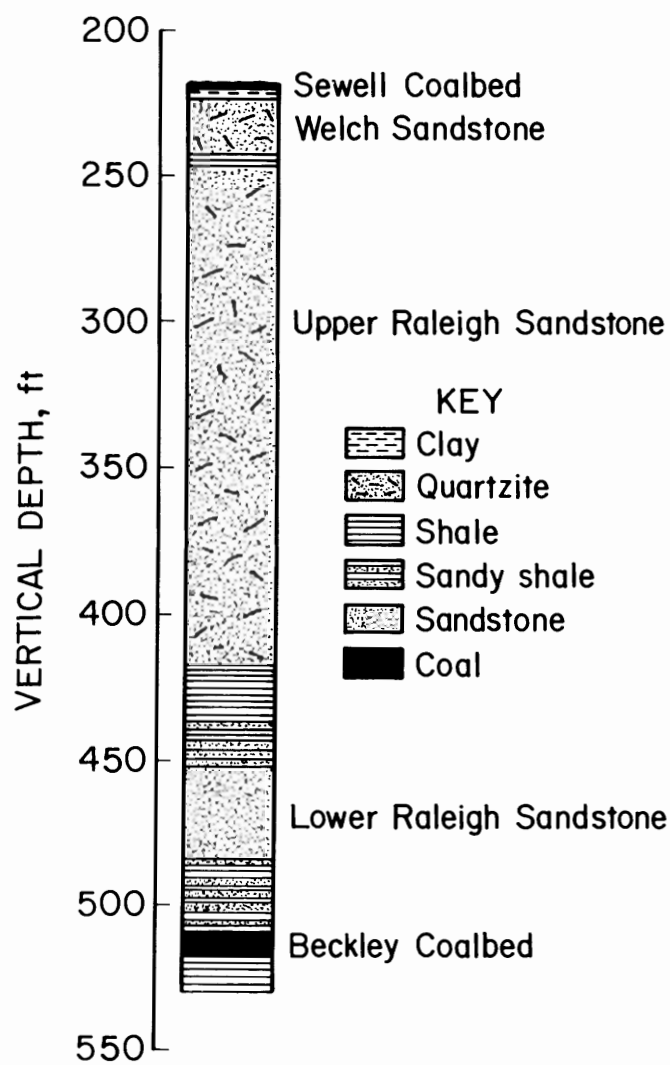

Figure 3.—Stratigraphic column.

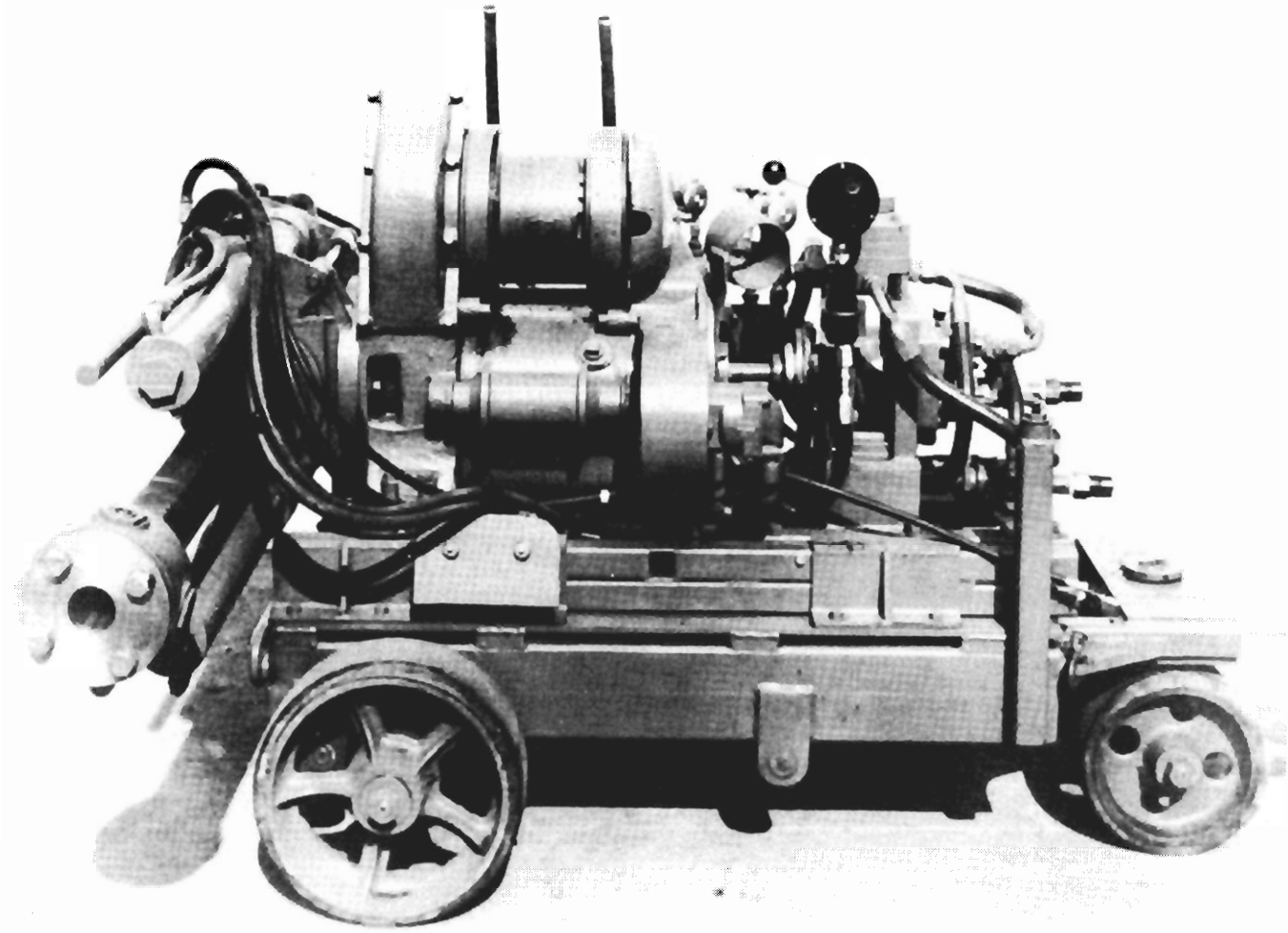

Figure 4.—Electrohydraulic drill.

DRILLING EQUIPMENT AND SETUP

A 20-ft- (6.1-m), 4-in- (10.2-cm) diam steel pipe is grouted into the coalbed to isolate the liberated gas and water. A full-port valve is connected to the pipe. Drilling proceeds through a gas-water separator, which separates gas from the drill cuttings and water. The gas produced from the hole is ducted by flexible tubing to a 6-in (15.2-cm) underground pipeline and subsequently vented through an 8-in- (20.3-cm) diam vertical pipe to the atmosphere at the surface.

The holes were drilled with a 40-hp (298.4×10^2-W) electrohydraulic drill (fig. 4), which provided bit thrust and rotation. The drilling assemblies were composed of 3-1/2-in (8.9-cm) drag bits, 1-ft- (0.3-m), or 14-ft- (4.3-m) long NQ drill collars, 10-in- (0.25-cm) long spiral centralizer(s), and 2-3/16-in (14.2 cm) BQ drill rods (fig. 5). The assembly type drag bit (fig. 6), which has stepped carbide blades, is capable of responding to drilling parameters, and has a high penetration rate in coal (*1*).

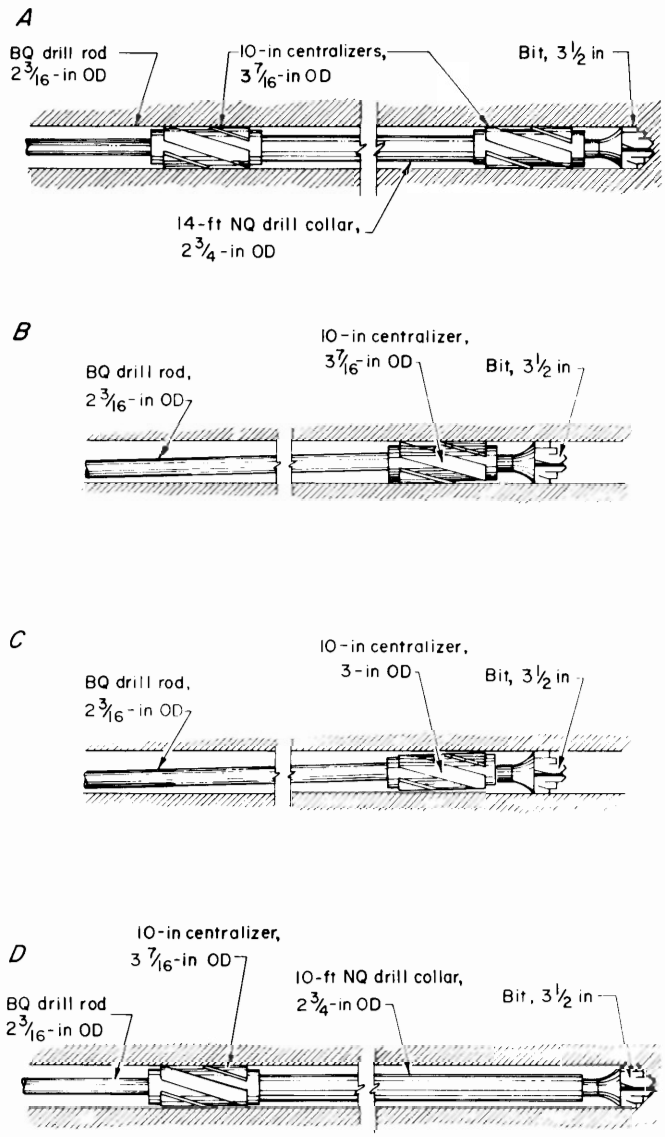

Figure 5.—Short-collared drilling assemblies.

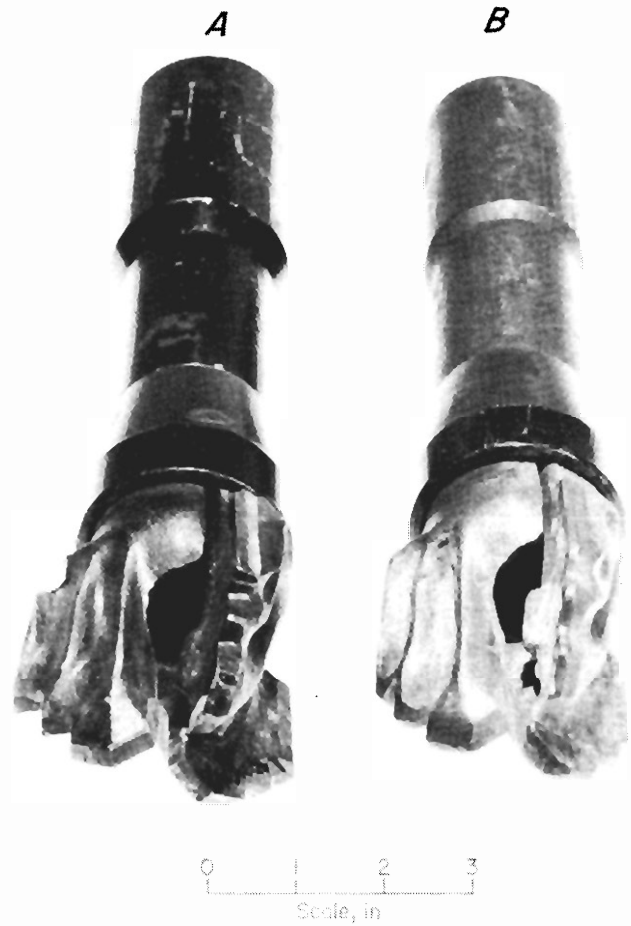

Figure 6.—Assembly type drag bits. *A*, **New bit;** *B*, **worn bit.**

DRILLING RESULTS

Initially, the plan was to use control procedures, excepting that the 14-ft (4.3-m) collar was substituted for the 18-ft (5.5-m) collar. However, efforts at keeping the trajectory of the assembly (fig. 5*A*) in the center of the coalbed led to three aborted short holes, *A*, *B*, and hole 1 (fig. 7).

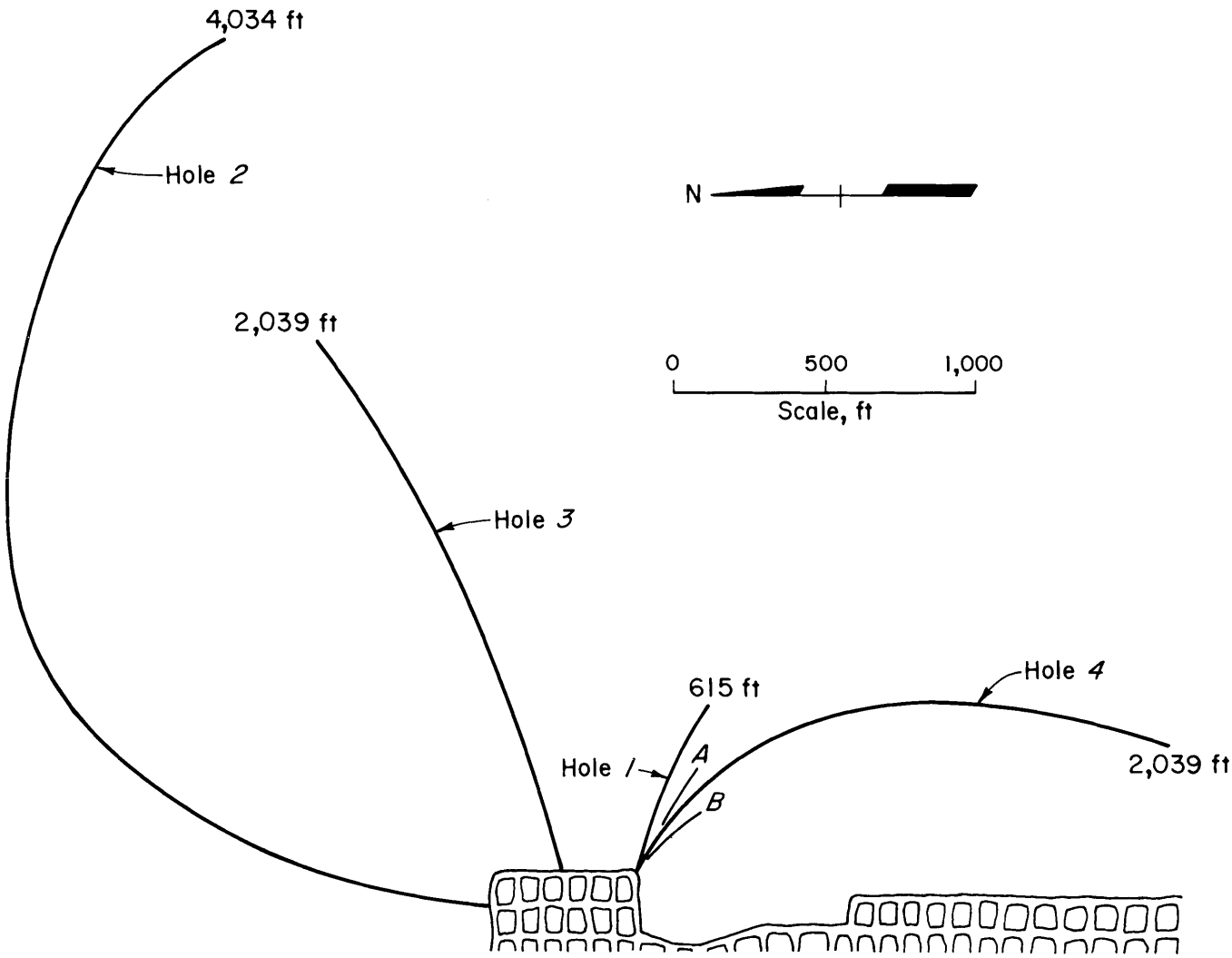

Figure 7.—Location of holes map with entries.

Figure 8 shows the trajectory of hole 1 in the vertical plane. The primary drilling assembly used in hole 1 was the short-collared standard assembly (fig. 5*A*), except the rear centralizer was removed so that the bit would tend to drill slightly upward in the soft coal. However, the assembly was still too heavy for the soft coalbed, and the trajectory nosed over towards the floor rock. It was replaced with the bit plus centralizer assembly (fig. 5*B*), which is configured to bring the trajectory of the bit upward. This assembly behaved as predicted, however, it failed to deflect from the roof at 214 ft (65.2 m) which it hit at about 4° (0.07 rad). Later, when used between 316 and 406 ft (96.3 and 123.7 m) as a substitute for the primary assembly, it bounced off the floor shale which it hit at about 3° (0.05 rad). The floor rock was then encountered using an assembly configured to lower the trajectory of bit (fig. 5*D*) at about 490 ft (149.4 m) after the floor was mistaken for roof.

Efforts to keep the trajectory of the bit near the center of the coalbed were abandoned at about 400 ft (122 m) depth in hole 2 after the short-collared standard assembly (fig. 5*A*) nosed over towards the floor rock. From that point in hole 2, and for holes 3 and 4, a strategy was followed which let the short-collared assemblies drill along the bedding plane contacts instead of being modified to keep away from the contacts as in control procedures. This strategy, which was adapted to the relatively thin, undulating coalbed, was to let the assemblies drill to the roof or floor rock and make them deflect or bounce along the rock contact in coal. Because of their configuration, which make them drill either up or down, the short-collared assemblies drilled to the roof or floor contact as

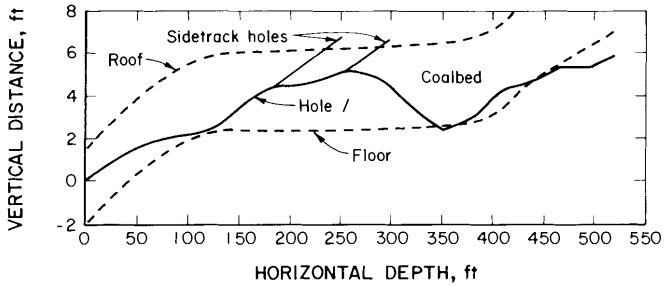

Figure 8.—Vertical section, hole 1.

expected. The initial deflection was made by briefly substituting a short-collared assembly configured to drill away from the contact. For instance, the bit plus centralizer assembly (fig. 5*B*) was used to make the initial deflection off the floor rock in hole 2. The short-collared standard assembly (fig. 5*A*) was then replaced in the hole with the trajectory about parallel to the floor rock in the coalbed. After this maneuver was made, drilling became repetitious and simple. Deflecting was relatively easy because the short-collared assemblies drilled trajectories that stayed close to the contacts, essentially skimming the surface at 10- to 20-ft (3- to 6.1-m) intervals. The procedure was to modify the drilling parameters by judiciously decreasing the thrust and increasing the rotation of the bit to ease the bit away from the rock contact. This procedure was invariable, making it unimportant to know which contact the bit was following. Thrust was kept high enough to keep the bit moving so that rotation speed did not become a factor by cutting a dent in the rock which the bit might try to follow. The drill cuttings varied frequently from black when the bit drilled in coal parallel to the bedding plane to stained brown when the bit was deflecting off the shale. This strategy allowed each hole to be completely drilled without removal of the assembly.

Examples of the drilling parameters used to deflect the bit off floor or roof rock, compared to normal drilling parameters used to drill in the coalbed, are shown in tables 1 and 2. In table 1, which shows the parameters used with the short-collared standard assembly (fig. 5*A*), only the bit rotation was increased at 700-ft (213-m) depth to deflect the bit. The penetration rate, which had decreased to 21 in/min (0.53 m/min) because of resistance by the floor rock, gradually increased during the successful deflection back to the original 30 in/min (0.76 m/min). At 1,500-ft (457-m) depth, it was required to both lower the thrust and increase the rotation rate to make the deflection. In table 2, which shows the parameters used with the bit plus centralizer assembly (fig. 5*B*), no adjustments were needed at 750 ft (229 m) to deflect the bit. It was a common experience during drilling that contacts with the roof rock required less adjustment and a shorter drilling interval to deflect than contacts with the floor rock. This was apparent because the bit plus centralizer assembly, which

Table 1.—Drilling parameters, short-collared standard assembly (fig. 5*A*)

Hole depth, ft	Bit thrust, lb	Bit rotation, r/min	Drill rate, in/min	Location of bit
700	1,200	100	30	In coalbed.
700	1,200	140	21-30	Deflecting off floor rock.
1,500	1,500	110	20	In coalbed.
1,500	1,000	135	5-18	Deflecting off floor rock.

Table 2.—Drilling parameters, bit plus centralizer assembly (fig. 5*B*)

Hole depth, ft	Bit thrust, lb	Bit rotation, r/min	Drill rate, in/min	Location of bit
750	1,000	180	20	In coalbed.
750	1,000	180	13-20	Deflecting off roof rock.
1,800	1,400	200	30	In coalbed.
1,800	1,000	250	10-15	Deflecting off roof rock.

was much less constrained in the hole being drilled, deflected into alinement with the bedding plane quicker than the short-collared standard assembly, which also had to overcome the force of gravity.

Figure 9 shows the locations of holes 2, 3, and 4 in the vertical plane. Vertical surveys, which are made with the Sperry-Sun[3] downhole surveying instrument (*1*), are used in control drilling to monitor hole inclination so that bit trajectory can be maintained parallel to the bedding plane. In this test, surveys were routinely made to 1,675 ft (510 m) in hole 2; 1,350 ft (411 m) in hole 3; and 700 ft (213 m) in hole 4, by which time the trajectory of each assembly was known to be bouncing along a roof or floor bedding contact. The elevation of the back portion of each hole was plotted from survey traverses made after drilling was completed.

Figure 7 is a map of the test site that shows the horizontal trajectories drilled by the short-collared assemblies. Azimuth surveys made after each hole was drilled showed that these assemblies had drilled continuously arcing and not random trajectories. As observed in other studies (*7*), holes that are drilled in the coalbed, or against the floor rock, tend to arc to the right because of right-hand bit rotation. This study showed that left-hand trajectories were smaller than right-hand trajectories. Holes that arc to the left apparently only occur because of deflection of the bit off coalbed inclusions or the roof rock. Hence, because of bit rotation, left-hand trajectories are much less frequent, and usually less in magnitude than right-hand trajectories.

[3]Reference to specific products does not imply endorsement by the Bureau of Mines.

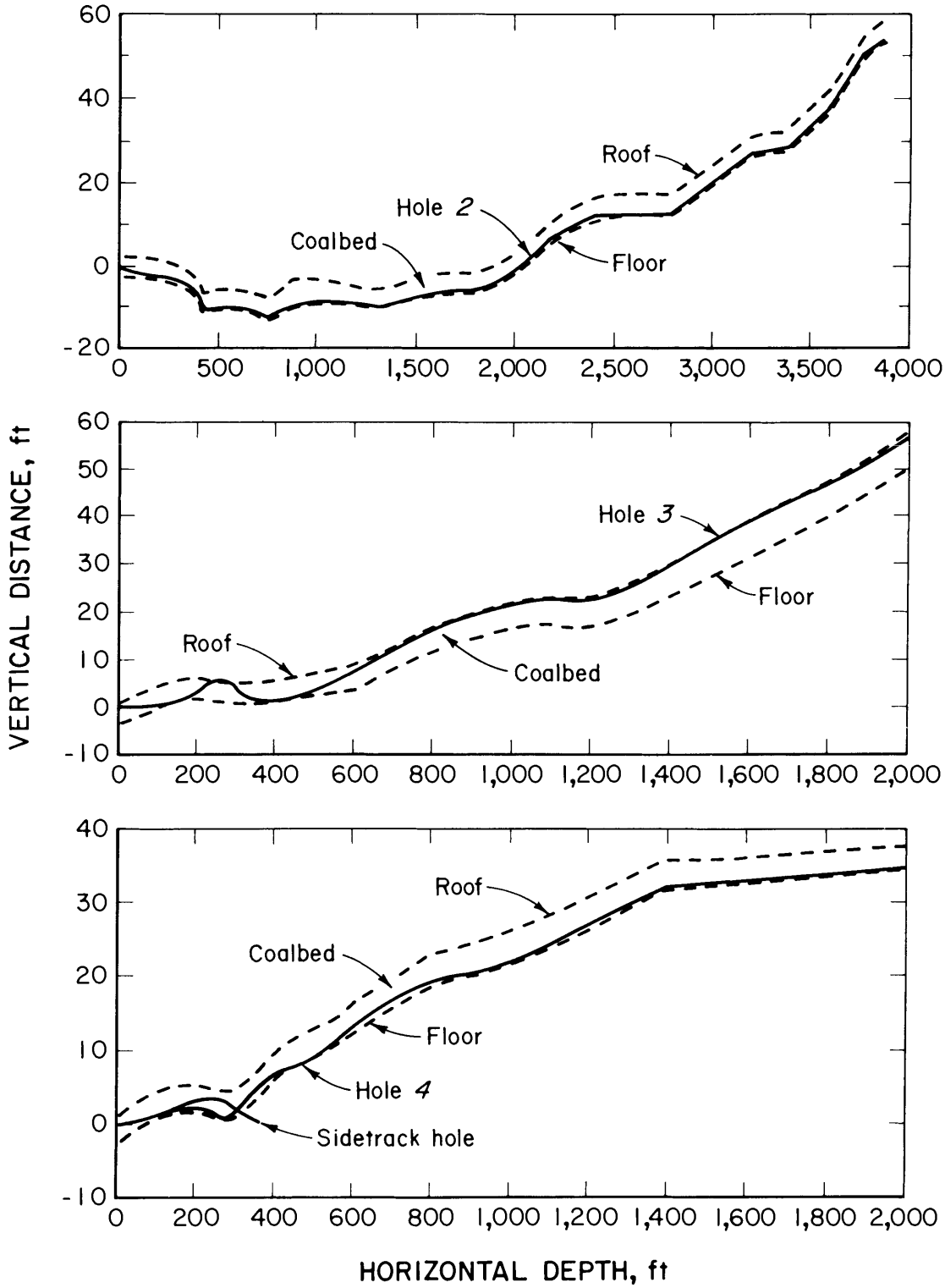

Figure 9.—Vertical sections, holes 2, 3, and 4.

Table 3.—Drilling results of assemblies, in holes 2, 3, and 4

Hole	Assembly configuration	Depth used, ft	Results
2	bit, centralizer, 14-ft collar, and centralizer (fig. 5*A*).	3,980	Stayed on or near the bottom of the coalbed; the clockwise rotation gradually turned the hole in an arc to the right.
3	bit and centralizer (fig. 5*B*)	1,900	Stayed on or near the top of the coalbed; the clockwise rotation of the bit against the roof gradually turned the hole in an arc to the left.
4	bit and 1-ft collar (fig. 5*C*)	1,490	Reamed a new hole nicely but stayed against the floor rock, turning an arc to the right.
4	bit, 10-ft collar, and centralizer (fig. 5*D*) .	460	Followed the floor rock; turned in an arc to the right; sub behind the assembly sheared off due to extreme turn off a roll.

Table 3 summarizes the results obtained using the tested drilling assemblies. Hole 2 was drilled with the standard assembly (fig. 1), except that a shorter, 14-ft (4.3-m) drill collar was substituted (fig. 5*A*). This short-collared assembly fell to the shale floor contact where it stayed for much of its length. Hole 2 was advanced to 4,034 ft (1,230 m), but a (130°, 2.27 rad) wide arc to the right was experienced. Hole 2 was aborted because the hole was sufficiently long for degasification. There also was concern that the long drill rod string might fatigue and break. Hole 3 was drilled with a bit and one centralizer (fig. 5*B*), commonly used in standard drilling procedures to increase the bit inclination, by carefully bringing it to the roof, then allowing it to bounce along the shaley bedding plane. This assembly drilled by far the most linear horizontal trajectory, turning an arc of about 26° (0.45 rad) to the left. The left-hand arc resulted because bit rotation deflected the bit to the left when it was impinged against the roof during contact drilling procedures. Hole 3 was aborted because it was entering an area already being degassed by hole 2.

The final useful variation of the standard assembly was used in hole 4. It consisted of a bit followed by a 3-in-(7.6-cm) diam centralizer (i.e., a 1-ft, 0.3-m drill collar) (fig. 5*C*), which followed the shaley floor rock intercept with coal similarly to the assembly used in hole 2. Another assembly variation, consisting of a bit followed by a 10-ft (3.0-m) drill collar and centralizer (fig. 5*D*), commonly used to lower the angle of holes, was used to drill a long segment along the floor contact in hole 4, but was ultimately found to be too stiff for the contours resulting in breaking a drill rod at the threads. Hole 4 was aborted to prevent the arcing trajectory from entering a mine opening. The total arc turned by the two assemblies was about 80° (1.40 rad) to the right.

The best performing assembly in this test was the bit plus centralizer assembly (fig. 5*B*). Besides drilling the more linear hole, it deflected easier during the contact drilling procedure than did the short-collared standard assembly (fig. 5*A*).

The features of the assembly-type drag bit (fig. 6) that are recommended for drilling coal because of its penetration rate are also useful in contact drilling. The steps, which are 45° (0.79 rad) with the face of the bit, tend to deflect the bit off shale, or even clay floor rock if the bit hits the plane of the rock at a low angle (*1*). In contact drilling, a worn stepped drag bit is recommended because it has lost some of its ability to penetrate floor or roof rock and is still able to drill coal. Figure 6 shows a drag bit which was used to drill 6,073 ft (1,854 m) in coal. It became dull, but never entered the shaley roof or floor. The worn bit was still penetrating at 2-1/2 ft/min (0.76 m/min) when it was removed from service. The same success could be achieved by dulling a drag bit in the shop before putting it into service.

DEGASIFICATION RESULTS

Gas flows from the individual holes are shown in figure 10. Average gas flows ranged from 50,000 ft^3/d (1,416 m^3/d) from hole 1 to 440,000 ft^3/d (12,460 m^3/d) from hole 2 (table 4). Note the productiveness of hole 2 due to its length. Holes 1, 3, and 4 were less productive because they were shorter, nearer the mine (fig. 7), and their drainage patterns were shielded by the arced trajectory of hole 2.

However, if hole 3 had been continued to 4,000 ft instead of hole 2, it would have captured more methane. A 4,000-ft- (1,219-m) long hole drilled with the bit plus centralizer assembly (fig. 5*B*) would have penetrated the coal-gas reservoir about 3,850 ft (1,173 m). By contrast, hole 2 penetrated virgin coal 2,900 ft (884 m) because of its chance location at the corner of a section (fig. 7).

Gas flow rates were enhanced because of the low coalbed water in the test area. Average water flows were very low, from 0.2 gal/min (0.76 L/min) from hole 2 to only a trace from hole 1. Hence, it was unnecessary to dewater the coalbed before degasification could occur.

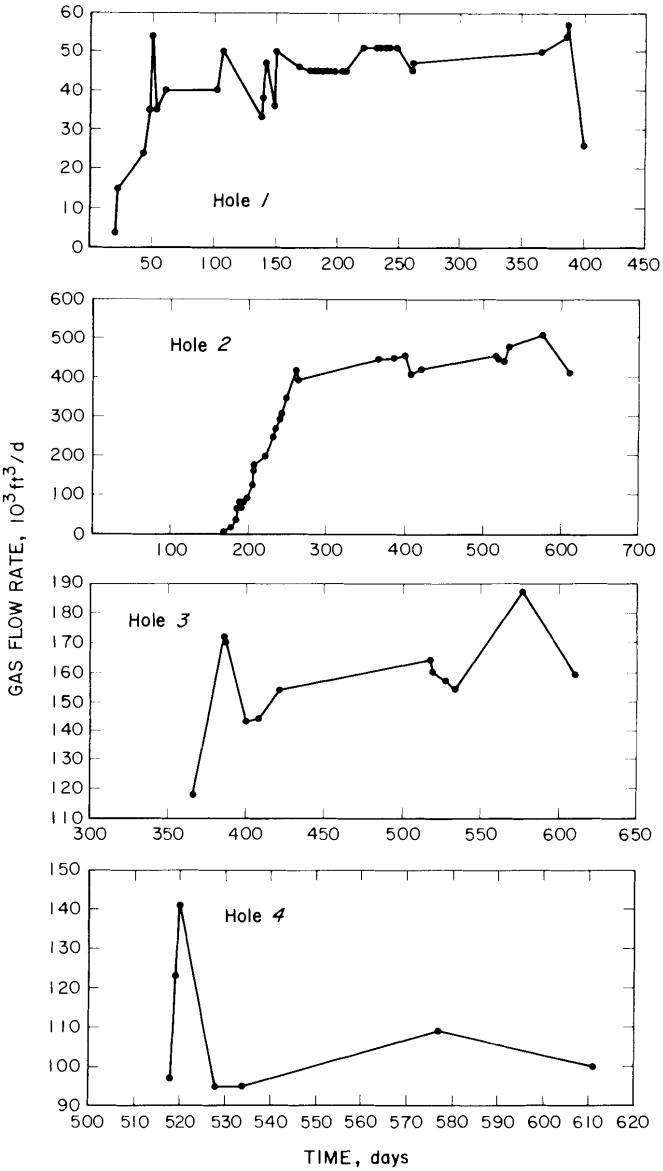

Figure 10.—Gas flow rates, holes 1, 2, 3, and 4.

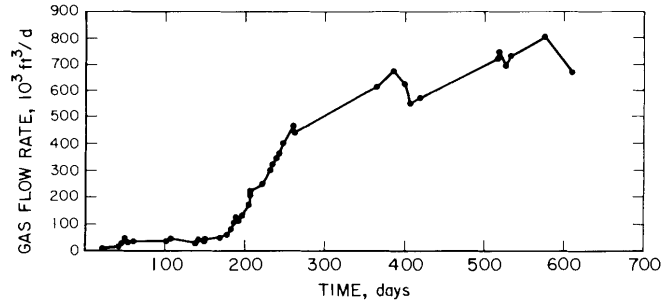

Figure 11.—Total gas flow rate.

Figure 11 shows the total gas flow for all holes. The peak gas flow was 805,000 ft^3/d (22,798 m^3/d). Cumulative gas and water production after 510 days was 186,900,000 ft^3 (529,300 m^3) and 220,320 gal (833,911 L), respectively. Because of the low water rate, less than 1/2 gal/min (1.9 L/min) for the four holes, the average methane flow was 82 $(ft^3/d)/ft$ (7.6 $(m^3/d)/m$) of hole drilled compared with 27 $(ft^3/d)/ft$ (2.5 $(m^3/d)/m$) at the previous Beckley Coalbed site. Table 4 shows the flow rate from each hole at the current site. The 110 $(ft^3/d)/ft$ (10.2 $(m^3/d)/m$) rate for hole 2 was constant for the final 350 days of the study.

Table 5 compares results obtained in the two Beckley Coalbed studies. After about the same degasification period, the current study had captured 10 times the volume of gas due to the length of the four holes, compared with eight holes in the earlier study, and the dryness of the coalbed. The presence of coalbed water was a problem at the first site. In the first study, the ratio of gas to water from the holes was 3.3 ft^3/gal (0.025 m^3/L) and, in the current study, this ratio was 848 ft^3/gal (6.3 m^3/L). If a successful drilling strategy had been applied at the first Beckley Coalbed site, longer holes would have dewatered the coalbed, followed by degasification.

Table 4.—Methane flow rates from holes

Hole	Length, ft	Average gas production, ft^3/d	Methane flow, $(ft^3/d)/ft$
1	478	50,000	105
2	4,034	440,000	110
3	2,039	156,000	76
4	2,039	105,000	51

Table 5.—Beckley Coalbed studies compared

Site	Hole length in coal, ft	Gas drained after 510 days, ft^3	Water drained after 510 days, gal	Ratio: gas/water, ft^3/gal
No. 2 air shaft.	3,486 (8 holes)	18,700,000	5,705,000	3.3
2 NE mains.	8,590 (4 holes)	186,900,000	220,320	848.0

GAS ANALYSIS

Tests conducted in both the Pittsburgh (*2-3*) and Beckley Coalbeds (*6*) have shown that coalbed gas can be substituted for natural gas. Table 6 compares the average composition of the coalbed gas at the Beckley Mine with that obtained at the previous sites. The methane samples taken from the 2 NE mains site showed excellent quality, easily convertible to commercial use.

Table 6.—Comparative gas analysis, percent

Coalbed	Ethane	Carbon dioxide	Oxygen	Nitrogen	Methane
Pittsburgh, multipurpose borehole	0.16	9.06	0.34	1.24	89.10
Pittsburgh, 18-ft-diam shaft	.05	10.07	.12	0	88.6
Beckley, No. 2 air shaft	0	.01	.16	3.12	96.71
Beckley, 2 NE mains	0	.41	.13	.24	99.2

SUMMARY AND CONCLUSIONS

Long methane drainage holes were drilled in the Beckley Coalbed by substituting short-collared assemblies for the long-collared assembly normally used to rotary drill horizontal holes. These assemblies drilled widely arcing holes along the roof or floor rock, depending on their configuration, but never left the coalbed. Simple adjustments to the drilling parameters made deflections of the bit that followed the contacts easier. Drilling along the contacts was abetted by the presence of shaley roof and floor rock, the friable nature of the coalbed, and by using a dulled drag bit. This strategy might have application to other soft coalbeds with similar geology. The bit plus centralizer assembly (fig. 5*B*) was the most suitable assembly tested because of its relatively linear trajectory.

Large volumes of commercial quality methane gas were produced from the long horizontal holes drilled in this study though the area had degasified for several years. After 510 days, 186,900,000 ft^3 (529,312 m^3) of methane had been drained from the coalbed. The methane captured per increment of drill hole was about 110 $(ft^3/d)/ft$ (10.2 $(m^3/d)/m$) from hole 2 (fig. 7).

REFERENCES

1. Cervik, J., H. H. Fields, and G. N. Aul. Rotary Drilling Holes in Coalbeds for Degasification. BuMines RI 8097, 1975, 21 pp.
2. Fields, H. H., J. H. Perry, and M. Deul. Commercial-Quality Gas From a Multipurpose Borehole Located in the Pittsburgh Coalbed. BuMines RI 8025, 1975, 14 pp.
3. Fields, H. H., J. Cervik, and T. W. Goodman. Degasification and Production of Natural Gas From an Air Shaft in the Pittsburgh Coalbed. BuMines RI 8173, 1976, 23 pp.
4. Prosser, L. J. Jr., G. L. Finfinger, and J. Cervik. Methane Drainage Study Using an Underground Pipeline, Marianna Mine 58. BuMines RI 8577, 1981, 29 pp.
5. Perry, J. H., G. N. Aul, and J. Cervik. Methane Drainage Study in the Sunnyside Coalbed, Utah. BuMines RI 8323, 1978, 11 pp.
6. Goodman, T. W., J. Cervik, and G. N. Aul. Degasification Study From an Air Shaft in the Beckley Coalbed. BuMines RI 8675, 1982, 19 pp.
7. Goodman, T. W., and J. Cervik. Horizontal Trajectories of Rotary-Drilled Holes. BuMines RI 9177, 1988, 11 pp.

☆ U.S. GOVERNMENT PRINTING OFFICE: 611-012/00,061

INT.-BU.OF MINES,PGH.,PA. 28891