UNDERGROUND MINE COMMUNICATIONS

J. N. Murphy and H. E. Parkinson

Reprinted from Proceedings of the IEEE, Vol. 66, No. 1, January 1978
U. S. Government work not protected by U.S. copyright

Underground Mine Communications

JOHN N. MURPHY, SENIOR MEMBER, IEEE, AND HOWARD E. PARKINSON

Invited Paper

Abstract—Underground mines are typically extensive labyrinths that employ many people working over an area of many square miles; extensive analysis of mine-communications systems has identified specific problem areas, in particular the excessive times required to locate key personnel underground, the inadequacy of existing phone systems in terms of capacity and privacy, and the inability to communicate with men on the move with wireless communications, as is taken for granted on the surface. A review is presented of the existing systems, the problem definition, and the various approaches that have been or are being investigated to solve these problems.

Manuscript received June 8, 1977; revised August 28, 1977.

The authors are with the Industrial Hazards and Communications group, Pittsburgh Mining and Safety Research Center, Bureau of Mines, U.S. Department of the Interior, Pittsburgh, PA 15213.

I. INTRODUCTION

A. The Nature of Coal Mining

WHILE THERE ARE many similarities among coal mining techniques anywhere in the world, there are also striking differences, the most significant of which is that in the U.S. approximately 95 percent of the underground coal is mined by the room and pillar technique, while in European countries approximately 95 percent of the underground coal is mined by the longwall technique. Other coal-producing areas of the world may use either of the above methods or variations of these methods. A more exhaustive discussion of the mining techniques can be found in [1], [2], but for the pur-

U.S. Government work not protected by U.S. copyright

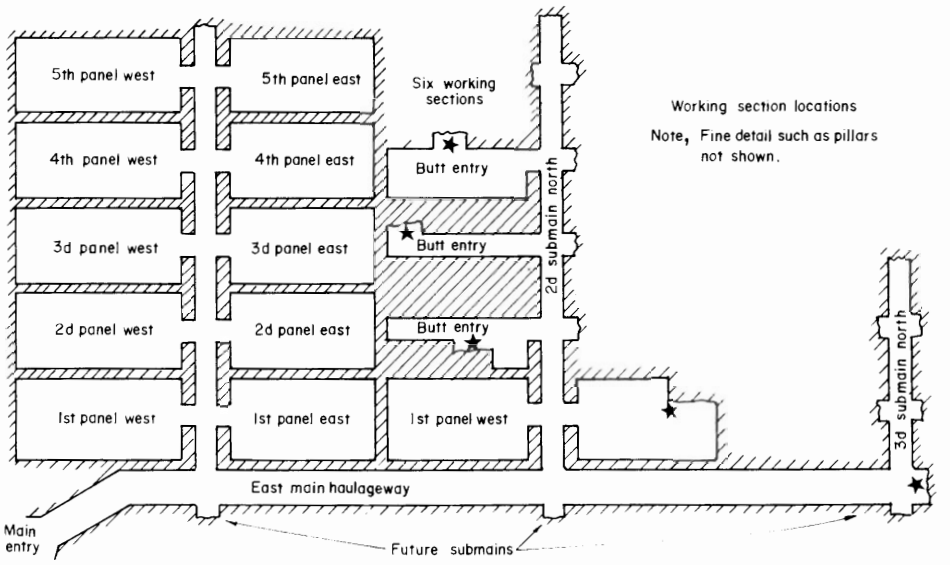

Fig. 1. Plan view of typical mining operation.

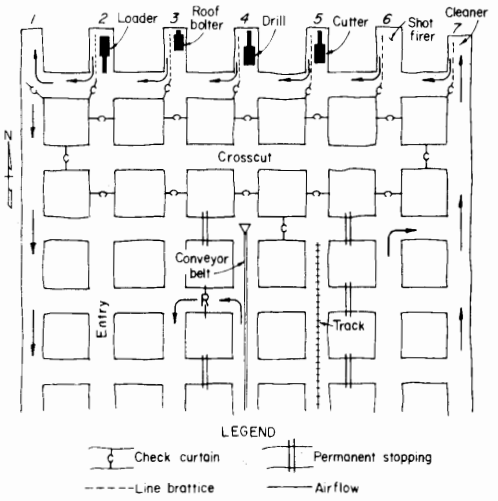

Fig. 2. Plan view of working section showing crosscuts.

poses of this paper, the following simplified descriptions will suffice. Most, but not all, coal seams are horizontally bedded deposits that are fairly flat and continuous and that do not usually vary significantly in thickness for a given deposit; hence, the coal extraction process typically involves constructing tunnels or entries in coal, or mostly in coal, when the seam is not thick enough to provide adequate clearance for certain types of equipment.

In room and pillar minings, a number of parallel entries are driven through the coal as shown in Fig. 1; the entries are used for ventilation, men and materials handling, and emergency escapeways. In the U.S., which is the principal user of this technique, Federal mining law [3] requires that a crosscut or connecting tunnel at right angles to the main entries be installed every 30 m; the result is the maze of entries and blocks of coal as shown in Fig. 2. In an actual mining operation after this set of main entries is developed some distance, mining is then extended to the left and right of this area to further extend the size and complexity of the labyrinth. Extraction of the coal is via electrically powered machinery, such as the continuous miner as shown in Fig. 3, or combinations of electrical machinery and explosives.

In longwall mining, as typically practiced in countries other than the U.S., a pair of parallel entries is driven, separated by about 150 to 180 m and connected at the ends, as shown in Fig. 4. Then, with an electrically powered shearer (Fig. 5), the coal across the longwall is cut and falls onto the conveyor; roof support in the work area is provided by hydraulic supports that are advanced as the coal is extracted. Where longwall mining is used in the U.S., the single parallel entries used on either side of the longwall must be three entries on each side to comply with Federal mining laws [3]. The emphasis on the single-entry versus the multiple-entry approache has been stressed primarily because of the differences in the way that wireless communications can be implemented, as discussed below.

While this paper is directed primarily toward coal mine communications, basically the same problems and the same types of solutions are applicable to other types of underground mines; there are other types of mining methods, depending on the nature of the mineral deposit and the surrounding geological conditions, but either single or multiple tunnels exist, perhaps in the vertical as well as the horizontal axis. For other mining methods [4], [5] several references are provided. Some of the work described in this paper relates to noncoal mine experimental work.

Most coal mines are large underground complexes, many of which are 50 km^2 or more in area and have up to 16 working sections operating simultaneously. Production from such a mine may be 3-million tons per year; in the U.S., the vast majority of underground coal is mined primarily with continuous mining machines and shuttle cars.

B. An Overview of Communication Services

Communications are necessary to achieve coordinated work. There is no problem while members of the work crew are within range of each other's voices; but immediately upon entering a portal to the underground, the work crew is separated from the surface workers and Federal law calls for communications.

Fig. 3. Typical continuous miner used for coal production.

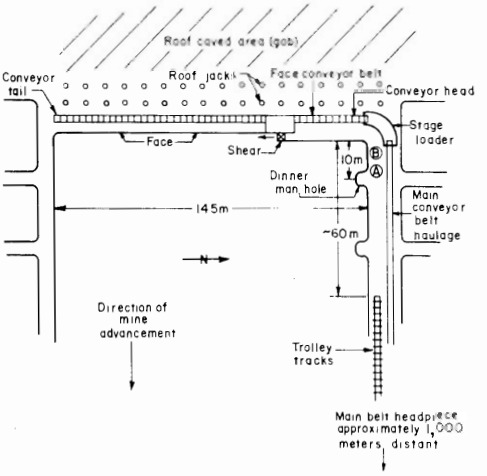

Fig. 4. Plan view of typical longwall section with intake and return airway.

Fig. 5. Typical longwall shearer.

Fig. 6. Loudspeaking or paging-type telephone.

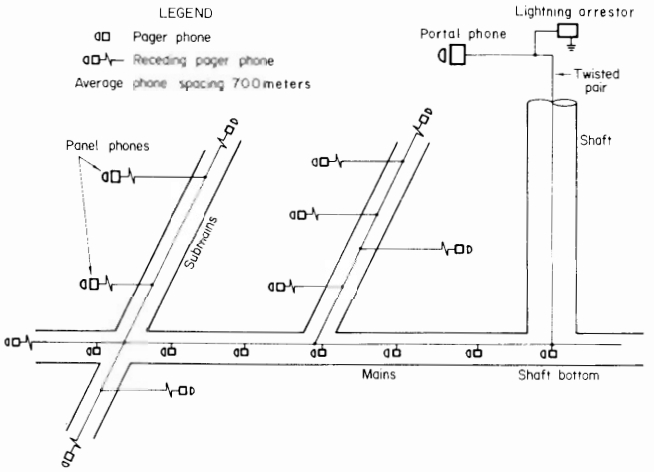

Fig. 7. Typical pager-phone system.

C. Bell Signaling

At the portal, when there is a hoist, bell signals are used between those requesting the cage and the hoistman. Recently, cages have become automatic elevators, and phone-type communications are provided at the working level and in the cage. However, bell signals are simple and transcend language barriers.

D. Phone Systems

Telephones are the simplest and most reliable form of communications underground and from subsurface to surface. For many years magnetotype phones have been used, but local battery-powered loudspeaking telephones, with the advantage of transistor amplifiers that enhance the operating range, are by far the most prominent (Fig. 6). A few mines have central battery dial phones; however, the phones have not been robust, and phone companies will not go underground to provide service.

There are two basic wiring systems: One is a two-wire cable having two separate twisted wires, generally #16 gauge, with phones tapped-in anywhere along the line, and with branches going throughout the mine to form a common talk party-line system (Fig. 7). The other is the multiple pair (mostly six-pair) figure-8 type cable, with pairs used also for equipment control and monitoring. Of course, dial-type phones require multiple-pair cables with enough pairs from the surface to satisfy the total underground phones. Branch circuits are a single pair with three or four phones in a party-line mode.

E. Carrier Current Systems

Mines with electrified railroads often have trains going in one direction or another every 10 min, and FM carrier communications over the trolleywire-rail power circuit are used for dispatching (Fig. 8). In many cases this is the most dependable communication system. Compared with the telephone circuits, it has a better insulation and an appreciably higher mechanical strength. Damage caused by roof falls is very rare, and if damage does occur, it is quickly repaired so as to restore the haulage.

Signals are capacitively coupled to the trolley wire, and modified trolley voltage provides operating power for communication circuits. Other coupling circuits transfer signals between the trolley and the phone line. The dispatcher's unit is coupled and balanced to ground across the phone line, and at a re-

Fig. 8. Carrier current transceiver on mine locomotive.

mote location there is an impedance-matched connection to the trolley. This greatly enhances the total operating range.

F. Combined Systems

There are distinct advantages in using a total system integrated from subsystems. A carrier system interconnected to wired telephones greatly extends the range between the fixed station and the motormen on the locomotives. The nominal carrier frequency, either 88 or 100 kHz, is relatively outside the high ambient noise experienced at lower frequencies. The coupler interconnects the audio from the carrier, placing it on the phone line and the audio in the phone line, applying it to the carrier.

Another system combines the features of pager phones and dial phones to provide a private line with a selective page and an all page. An interconnect joins the external surface dial phones with the underground permissible phone system.

G. Other Services

The communication lines often are utilized for control and monitoring. Polarity-sensitive relays are coupled to phone lines as a means of opening, closing, and indicating the status of circuit breakers. Power lines are utilized by superimposing a carrier with frequency shift to control breakers and to monitor the flow of power and air into the mine. Complex monitoring and control are accomplished by tone multiplex with frequency-shift keying to allow channel monitoring and bidirectional simultaneous transmission of a control and indication signal. A limited use is made of dc pulsing, pulse counting, and pulse length for telemetry purposes. A coaxial-cable frequency-multiplex system, controlled by a computer, forms an integrated whole-mine communications and monitoring network that is capable of satisfying voice, supervisory, TV, and other requirements for mine communications.

II. Communication Apparatus

A. Pager Phones

Pager phones operate on a two-wire party-line system. They are simple to install, reliable in operation, and easy to maintain.

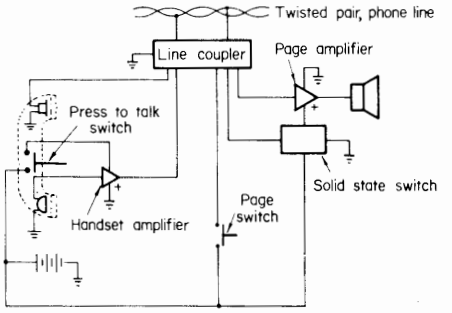

Fig. 9. Elemental pager phone schematic.

All the phones have a self-contained battery, a microphone amplifier, a pager amplifier, a paging speaker, and associated signaling and switching circuits.

A generalized schematic is shown in Fig. 9. A dc signal applied to the two-wire line by the station initiating the call actuates the solid-state switch in other phones, thus causing amplified voice to be broadcast from the speakers. The handset is used for party-line communication between the stations. When a "page" switch is actuated, a dc voltage is impressed upon all phones. The dc voltage actuates a solid-state switch to apply battery to the paging amplifier. With the "page" switch activated, the person initiating a call depresses the press-to-talk switch and calls out the desired person or location. The press-to-talk switch applies battery to the handset transmitter amplifier, amplified voice is connected to the activated paging amplifiers, and the "call" is broadcast throughout the phone system. After the page is completed, the "page" switch is deactivated, and with the press-to-talk switch depressed, the amplified handset-transmitted voice is applied to the handset receiver. Two-way party-line conversations are possible between all phones having the press-to-talk switch depressed.

With the advent of solid-state switches, the local voltage is provided by standard 12-V lantern batteries both for signaling and for powering the local amplifiers. Generally, the phone line is a twisted pair of #16 AWG, solid-conductor wire, double-insulated at 600-V dc. Splices are seldom made with special

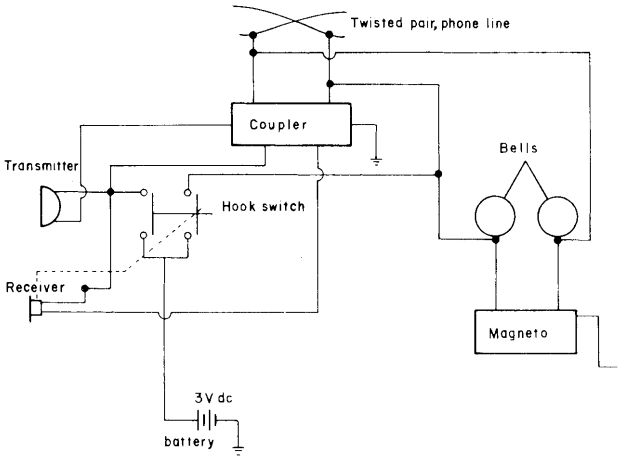

Fig. 10. Elemental schematic of magneto phone.

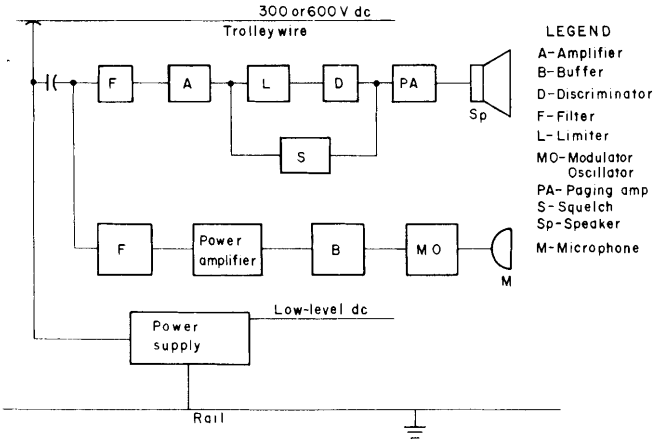

Fig. 11. Block diagram of 300/600V-dc carrier unit.

connectors, and the wires are generally twisted together. The Code of Federal Regulations identifies the requirement for lightning arrestors to be used on ungrounded, exposed telephone wires within 100 ft of the point where the circuit enters the mine. Gas-filled arrestors are in general use as a replacement of the typical telephone-type carbon-block surge arrestor.

In an average 1-million-ton mine there are 30 to 40 phones, and the line impedance is about 100 Ω. A phone can impress 1 to 2 V of audio into this line. As the mine develops, the miles of twisted pair increase; the limiting factor is the ability to signal the paging amplifier to turn on. The application of an electronic switch, in place of a low-voltage relay, has extended the operating range.

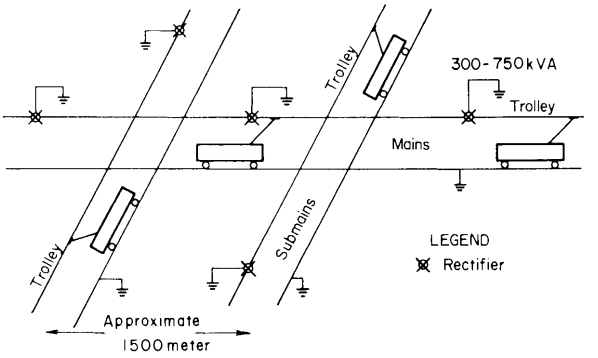

Fig. 12. Typical trolley system with locomotives and rectifiers.

B. Magneto Telephones

The magneto telephone has a battery, hand generator (magneto), bells, hook switch, line coupler, transmitter, and receiver. The battery supplies dc to the transmitter, and the hand generator impresses ac on the line where it is sensed by the bells as shown in Fig. 10.

The magneto generates about 100 V at 20 Hz and is cranked to produce the desired long and short rings. The hook switch is activated when the receiver is lifted from the hook. When the receiver is hung up, the battery voltage is removed from the transmitter.

Magneto phones are placed in a ladder system similar to that shown in the pager-phone system. The phones are not compatible with pager phones, and because there is no amplification of the transmitted voice, the received signal is often weak and noisy.

C. Carrier Current Phones

The principles of the carrier apparatus are relatively straightforward. A narrow-band FM-type modulation utilizes about 8 kHz of bandwidth. The typical transmitter (Fig. 11) is comprised of a carbon button microphone driving a low-level modulator–oscillator that is coupled by a buffer amplifier to a power switching amplifier. It is followed by a filter to reduce harmonics contained in the square wave and to reshape the output to a sine wave. The final stage of the filter is series tuned; the output is nominally 25 W at an impedance level of 25 Ω.

The most popular receiver is a tuned RF type. An input filter is impedance-matched and capacitor-coupled into two stages of RF amplification that are coupled by a transformer-filter into a limiter amplifier working into a discriminator. A squelch circuit is interposed before the speaker amplifier to silence the speaker at all times except when a clearly recognizable, about 5 to 10 mV, signal is being received. The audio output is 6 W into 16 Ω. A talk-back switch allows the operator to check the transmitter and receiver. New models have phase-lock receiver circuitry.

Carrier units operate either directly from the dc trolley power or from a lead acid storage battery and a charger for charging the battery from the dc trolley. The electrical environment is extremely severe. The trolley is either 300 or 600-V dc, and transient peaks of 12 000 V with pulse durations of 2 ms are not uncommon. The nominal line voltage fluctuations are in the ±20-percent range.

The trolley wire system is not a good communication path. The trolley is located at a minimum of 20 cm from the roof. The roof conductivity is about 10^{-4} mho/m. At a carrier frequency of 100 kHz the calculated attenuation rate for an unloaded trolley wire is about 1 dB/km. The carrier unit typically has a 80-dB operating range; thus the anticipated range would be 80 km. However, a realized range is about 10 km. The difficulty in realizing long range communication coverage is associated largely with the rectifiers and loads connected to the trolley wire.

At 100-kHz carrier frequency, the solid-state rectifiers commonly used to power the trolley act as impedances of about 1 Ω shunting the trolley wire rail, and are a severe hindrance to the propagation of carrier signals (Fig. 12). The motors of a

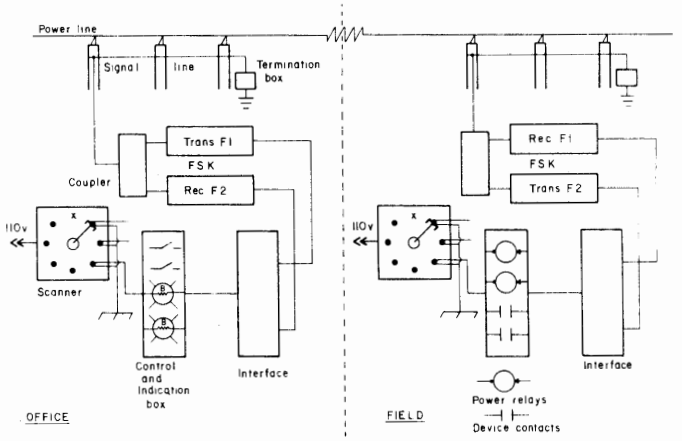

Fig. 13. Device control and indication by scanners and FSK power line carrier.

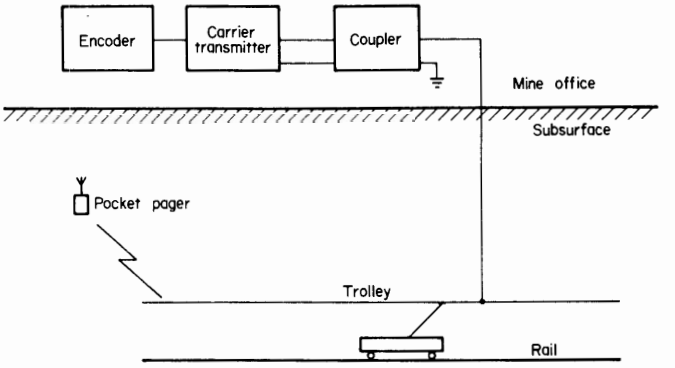

Fig. 14. Block diagram of pocket pager system.

50-ton locomotive are not a major problem, but heaters on board are as low as 50 Ω and are shunted across the output of the carrier unit with not more than about 4 m of heavy feeder cable to serve as a blocking inductance.

It is not easy to decrease the RF current loading by the rectifiers. The high direct currents require that the chokes be wound out of feeder cable, and they seldom can be wound on forms less than 1 m in diameter. In some instances, where there are 15 to 20 m of rectifier feed wire leads, it is possible to tune the feed lines with a capacitor to raise the impedance level to about 100 Ω. But there is always a reluctance to modify the power system for the benefit of communications.

Noise is also a serious problem. Carrier receivers could be designed for 10 μV sensitivity; however, the noise restricts useful sensitivity to 1 to 10 mV. However, solid-state rectifiers produce less noise than the mercury vapor rectifiers which they are replacing, and along with recent changes in squelch circuits, receivers are operating successfully at 0.3 mV.

A few special carrier systems have been made. The voice equipment, separated into a transmitter and a receiver with a dc bias voltage replacing the microphone and a polar relay replacing the loudspeaker, is used in an FSK mode to control and indicate "off–on" operation of devices (Fig. 13). One unique device uses the polarity of the 60-Hz power envelope to actuate a carrier switch. The presence of the carrier signal during the positive half cycle switches a device on, and the presence of the signal during the negative half cycle switches it off. Another piece of equipment is an electric-clock-type scanner with a permanent magnet attached to the end of a modified clock hand and the numbers replaced by reed switches. The transmit and receive clocks are started in synchrony, and the number positions gate the input and output for a channel with either an up-shift or a down-shift pulse for control and indication.

When used for control, the carrier apparatus is often coupled into the ac power mains. The signal is coupled inductively by running a special signal wire beneath the main powerline. The signal wire is generally 300 m long. The transmission range is 10 to 20 km.

Through advanced solid-state control, scanning and counting circuits are available, but very few mines have developed the skills required to service the more complicated electronic instrumentation. There are belt control systems using advanced solid-state circuitry that are modularized and have diagnostic indicators built in to assist the electrician in the replacement method of troubleshooting.

D. Other Apparatus

Inductive LF systems provide two-way communications in both vertical and slope hoisting. The haulageway communication apparatus is slightly modified to cope with water dripping and weak signal conditions. The cage or car unit is powered from a car battery. The signal is either direct or inductively coupled to the hoisting cable a few feet above the cage or car. The hoist room operator, with a foot switch and boom microphone, operates the communications in a hands-free manner. The mobile unit often must be repackaged to fit into specific space restrictions, and the individual microphone and speaker are replaced with a talk-back speaker and a heavy-duty push-to-talk switch. The signal is coupled at the hoist-sheave wheel by either an antenna or a coil pickup. The apparatus is generally modified to have squelch turn-on at $\frac{1}{2}$ mV of signal. Squelch popping is not as serious since the shaft EM noise is considerably less than in the haulageway. The range of operation approaches 1500 m, and there are several dead spots experienced through the length of the shaft. A charger is provided, and batteries are generally changed on a weekly basis.

Paging at LF is accomplished by inductive principles (Fig. 14). A pocket-size page receiver is activated when a signal is sensed by a small ferrite loop mounted inside a molded plastic case which also encloses an FM receiver, volume and squelch control, and loudspeaker. The pagers are either 88 or 100 kHz, whichever is the frequency of the mine trolley-wire carrier phone system. The paging signal is connected to the dc trolley wire and rail. A tone encoder is used for selective paging and for alerting that a page message will follow. The paging range is a function of the LF current flowing in the trolley wire. A few units are in operation, and because they are on the haulageway carrier phone frequency, these are mostly used by roving miners to monitor the haulageway communications.

Some fan monitoring systems use aboveground UHF high-band radios. They operate on a single radio channel with signal flow in one direction at a time. The equipment is standard alarm telemetry products available at the time of installation. The systems have discrete audio tones to send indication and control information. The office has a very simple printer that provides hard copy of the status of the fan and the circuit breaker.

E. Dial and Pager Phone Combined

The extension of the surface bell-type telephone to underground coal mines has two disadvantages: The potential hazard, in a methane environment, from the 120-V 20-Hz bell-ringing voltage; and the inability to locate a person who is not

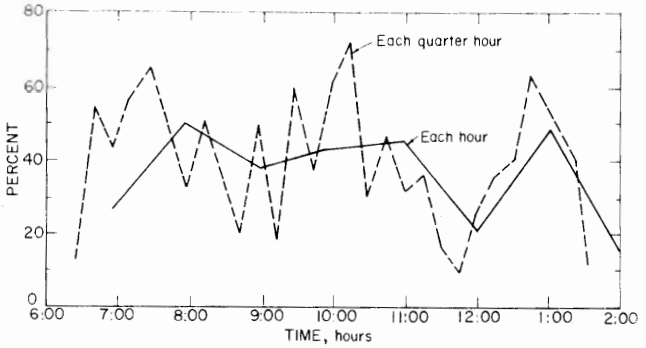

Fig. 15. Telephone utilization as a function of time for a 4500-ton-per-day mine.

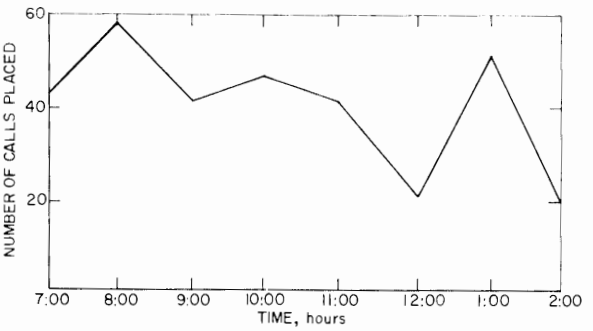

Fig. 16. Number of calls per hour as a function of time for a 4500-ton-per-day mine.

in his immediate work area. The bell-type telephone has two advantages: The selective call feature, and the multiple private lines.

A unique system combines the dial telephone with the pager phone. An interface is provided to isolate the potentially hazardous voltages from the mine line, and a converter changes ring voltage into the low-voltage dc required to operate the electronic switch that actuates the paging amplifier in the dial-selected pager phone. A tone signal notifies the caller when to begin the page. A handset switch eliminates the need for a hook switch. Depressing the handset switch accomplishes all functions normally accomplished by lifting the handset of a conventional phone from the cradle. An outgoing call is dialed, and the interface now modifies as required whether dialing another underground phone or dialing a conventional phone on the surface. A common page-line feature permits the paging of all phones as is required when searching for a roving miner. The system uses a multiple-pair cable.

F. Limitations of Existing Systems

Underground communication has been very effective but provides very minimal service. Recent studies have specifically defined the areas where service could be improved. Three key operational parameters were observed [6], [7]:

1) the time to reach key personnel underground;
2) the traffic density or availability of phone lines as a function of time during the working shift;
3) reliability and/or maintainability of the existing communications equipment.

Surveys have consisted of full-shift monitoring of mine telephone lines and carrier current rail haulage communication circuits, followed by detailed analysis of these recordings to ascertain if there are particular problem areas. As an example, consider the results from the survey of a 4500-ton-per-day mine. As seen in Fig. 15, the heavy line shows the percent of time each hour the phone is in use, with a maximum value of approximately 49 percent during the second hour of the shift. However, when the data are replotted (dashed line) for each quarter hour, it can be seen that there are times when the system is used 71 percent of the time. With this kind of system there is a 30-percent chance of finding a busy signal on a given call. This is considerably worse than the one chance in a thousand which is the standard for commercial telephone circuits. It is estimated that a six-channel phone system would be required to bring the system to commercial standards.

Further explanation of the data shows that the duration of a given call, or attempted call, is very short. Fig. 16 shows for the same phone line the total number of calls placed each hour. For many mines of this size, the survey shows that the average time to reach key personnel underground is about 30 min. In case of an emergency this time may be invaluable. In terms of operational efficiency the cost of a high-production section may be $1000 an hour; hence, if a maintenance foreman is needed, his value to the total operation can be rather significant, and the need to reach him promptly cannot be overstated.

In the same mine the carrier current phones were found to have a probability of being busy approximately 10 percent of the time. However, because these phones serve as a safety control system for the traffic on the haulageway, it is not deemed advisable to provide additional channels.

These surveys have been directed toward determining the operational efficiency of day-to-day mine communications systems. Additionally, there is a question of service during a emergency or postdisaster evacuation. In addition to operational communications systems, work is presently underway on the development of trapped-miner location systems employing a miniature electromagnetic transmitter or seismic signaling and detection on the surface. This work is the outgrowth of a study by the National Academy of Engineering on Mine Rescue and Survival [8].

A careful review of the requirements for an emergency communications system shows that

1) the equipment must be readily available at the time of emergency;
2) it must be routinely checked and maintained;
3) miners must know how to operate equipment;
4) they must know where it is in the event of an emergency.

It has been reasoned that the best emergency communications system is an operational one which is functional under emergency conditions.

III. Electromagnetic Propagation

The most desirable form of communications to reach key personnel on the move in a coal mine is wireless, either two-way or personal paging. However, the underground mining industry cannot take for granted the utilization of wireless communications as can their counterparts on the surface. As an example, at 27 MHz reliable communication in a mine entry is limited to about 30 m. Three options are available to the underground mine operator: 1) to use frequencies that are high enough to utilize the entries as waveguides, 2) to use frequencies that are low enough that propagation through the strata can be ensured, or 3) install a special conductor or leaky feeder (which in some cases may not be operationally acceptable).

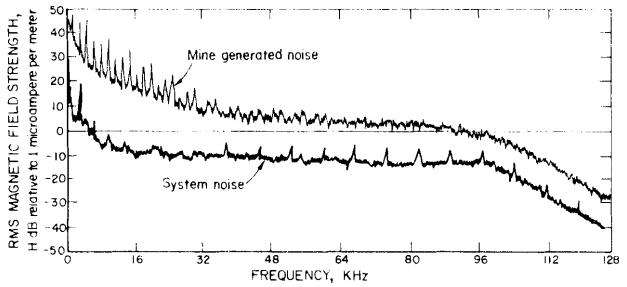

Fig. 17. Electromagnetic noise in spectrum in the face area of a coal mine.

Each technique has advantages and disadvantages, which will be discussed; however, for determination of the optimum frequency, it is necessary to quantify the EM noise environment in coal mines.

A. Electromagnetic Noise

The need for improved communication systems in mines is a long standing problem; during normal operation of a mine, the machinery used creates a wide range of many types of intense EM interference (EMI), and ambient EMI is, therefore, a major limiting factor in the design of a communication system. However, under emergency conditions when all the power in a mine is cut off, the residual EM noise is not a problem.

EM noise generated in mines is generally a nonstationary, random process. Therefore, the most meaningful parameters for EM noise generated in mines are statistical ones. In the work by the National Bureau of Standards [9], five time and amplitude statistics have been used in order to unravel the complexities included in the EM manmade noise in mines.

Ambient magnetic-field noise spectra covering frequencies from 100 Hz to 100 kHz are given for several underground coal mine locations. Data have been developed for magnetic field noise on the surface above the mine, noise in the mine face area, noise radiated by specific equipment, the voltage spectrum found on a 600-V dc trolley wire, and noise picked up simultaneously on loops and on roof support bolts [9g].

Extensive work has been conducted in the development of data collection techniques suitable for underground mines and in the qualification of noise conditions from representative mines [9].

Data reference [9g] was taken in U.S. Steel's Robena No. 4 Mine, Waynesburg, PA. Fig. 17 shows a spectrum measured in the face area (Spectral Resolution 125 Hz) about 10 m behind a continuous-mining machine in full operation. The machine was powered by 600-V dc. For the curve shown, the antenna sensitive axis was oriented for a vertical moment. The field strengths measured were about 39 dB above 1 μA/m (39 dB μA/m) at 10 kHz and show system noise with the antenna terminals shorted. In addition, the two horizontal antennas recorded mine noise spectra (not shown) that were lower in amplitude by about 10 dB at 100 kHz and about 35 dB at 10 kHz. Spectra taken in haulageways in the mine tended to show magnetic-field strengths typically 60 to 70 dB μA/m up to a few kilohertz, which then decreased sharply above 8 to 12 kHz. One exception was a spectrum taken near a dc motor-driven hydraulic pump (car pull). This spectrum peaked at 78 dB μA/m at 1000 Hz, dropped to 47 dB μA/m at 10 kHz, and was down to 25 dB μA/m at 30 kHz.

As seen in Fig. 17 the EM noise amplitude decreases with increasing frequency; however, three propagation mechanisms must be considered: 1) through the strata, 2) through the entries supported by metallic structures and conductors, and 3) through the entries where they serve as a "waveguide." Each of these mechanisms is discussed below. For the latter two cases, it would appear from the data presented above that selection of frequencies $>>100$ kHz would be desirable; however, for situations in which the propagation is through the strata, attenuation varies inversely with frequency. A complete description of through-the-earth propagation can be found in [10]. Because of the lower attenuation, the lower the frequency, the better the signal-to-noise ratio will generally be, despite the higher amplitude noise levels. In-mine noise levels at higher frequencies are typically the same as in other industrial operations.

B. Wireless Communications

This section covers voice communications within the mine, and voice or code communications through-the-earth to the surface or to another level of the mine. For real-time voice transmission, minimum frequencies are about 30 kHz—in the LF range the higher the frequency the better the coupling efficiency; in the UHF band, the radiated wave propagates in the "waveguide" formed by the mine opening. Hence, selection of optimum frequencies is dependent on the relative efficiency of propagation and the noise level, which together give the optimum signal-to-noise ratio. There are some practical considerations. At the lower frequencies, signal propagation is supplemented via coupling to conductors that may be in the mine entries, and antenna efficiency is not necessarily compatible with sizes that are portable. In the UHF band, attenuation is relatively low in straight mine entries and is significantly higher when the signal propagates around a corner or when a massive piece of machinery is in the path of propagation. The following is a discussion of experimental and theoretical analysis of 1) UHF and 2) VF, both through-the-earth and in the mine, and 3) the use of leaky feeder transmission lines to support propagation in a controlled manner. Random coupling to miscellaneous conductors in a mine entry is not covered in detail, but increases in range approaching two orders of magnitude have been obtained by these parasitic couplings.

Selection of Optimum Frequency:

UHF using the mine entry as a waveguide: A comprehensive theoretical study has been conducted [11] of UHF radio communication in coal mines, with particular reference to the rate of loss of signal strength along a tunnel and from one tunnel to another around a corner. Of prime interest are the nature of the propagation mechanism and the prediction of the radio frequency that propagates with the smallest loss. The theoretical results have been compared with field measurements [12].

At frequencies in the range of 200–4000 MHz, the rock and coal bounding a coal mine tunnel act as relatively low-loss dielectrics with dielectric constants in the range 5–10. Under these conditions a reasonable hypothesis is that transmission takes the form of waveguide propagation in a tunnel, since the wavelengths of the UHF waves are smaller than the tunnel dimensions. An electromagnetic wave traveling along a rectangular tunnel in a dielectric medium can propagate in any one of a number of allowed waveguide modes. All of these modes are "lossy modes" because any part of the wave that impinges on a wall of the tunnel is partially refracted into the surrounding dielectric and partially reflected back into the waveguide. The refracted part propagates away from the waveguide and represents a power loss. This type of waveguide mode differs from the light-pipe modes in glass fibers in which total internal re-

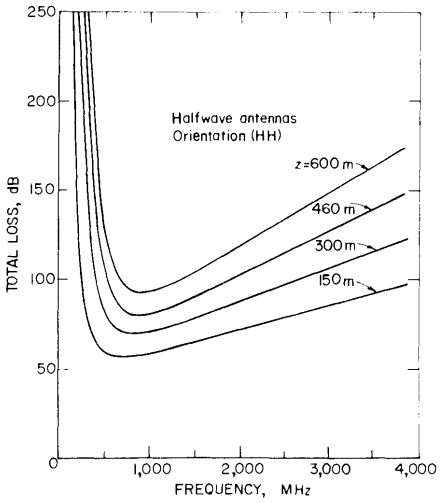

Fig. 18. Total loss for various distances along a straight tunnel.

flection occurs at the wall of the fiber, with zero power loss if the fiber and the matrix in which it is embedded are both lossless. It is to be noted that the attenuation rates of the waveguide modes studied depend almost entirely on refraction loss, both for the dominant mode and for higher modes excited by scattering, rather than on ohmic loss. The effect of ohmic loss due to the small conductivity of the surrounding material is found to be negligible at the frequencies of interest.

The overall loss in signal strength in a straight tunnel is the sum of the propagation loss and the insertion losses of the transmitting and receiving antennas. The overall loss for the horizontal transmit horizontal source antenna (HH) orientation is shown in Fig. 18, where it is seen that the optimum frequency for minimum overall loss is in the range 500–1000 MHz, depending on the desired communication distance.

The theoretical results for the three different antenna orientations for frequencies of 415 MHz and 1000 MHz are compared with the experimental data in Figs. 19 and 20. It is seen that the theory agrees quite well with the general trend of the data.

Experimentally, Goddard [12] found that the significant propagation characteristics are as follows:

1) attenuation (in decibels) increases nearly linearly with increasing distance;
2) horizontal polarization produces significantly lower transmission loss at a given distance than does vertical polarization; cross polarization produces a loss intermediate between horizontal and vertical;
3) transmission loss decreases significantly at a given distance as the frequency is increased from 200 to 1000 MHz.

With the main tunnel measurements as a reference, data were also obtained around corners. Observed corner attenuation is shown in Figs. 21 and 22 for 415 and 1000 MHz, respectively. Corner attenuation is plotted in db relative to the horizontally polarized signal level observed in the center of the main tunnel. Significant propagation characteristics are:

1) signal attenuation immediately around a corner is considerable at all three frequencies;
2) complete signal depolarization is observed around the corner.

Because of the high attenuation of a single corner, propagation around multiple corners is expected to be even more severely

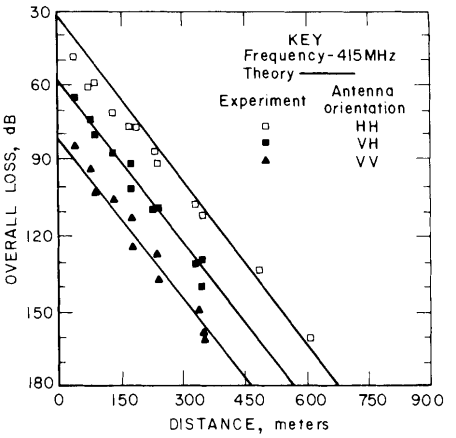

Fig. 19. Propagation loss in a straight tunnel in high coal at 415 MHz.

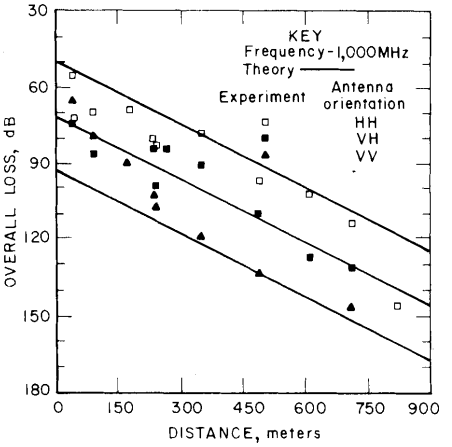

Fig. 20. Propagation loss in a straight tunnel in high coal at 1000 MHz.

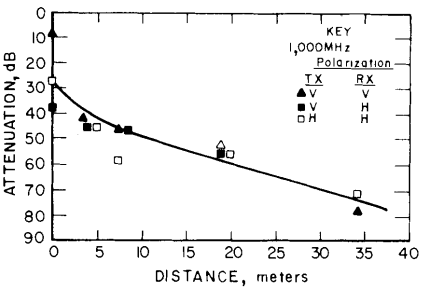

Fig. 21. Attenuation of a single corner at 415 MHz.

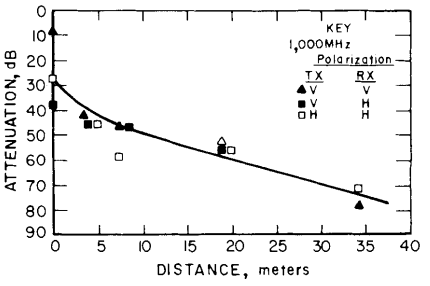

Fig. 22. Attenuation of a single corner at 1000 MHz.

attenuated. Consequently, the signal existing at any point can be reasonably assumed to have followed the path with the least number of corners. The transmission loss at any point along a cross tunnel can then be estimated by adding the attenuation in the straight tunnel to the transmission loss corresponding to the distance along the main tunnel back to the transmitter.

Subsequent work by Wait *et al.* [13] analytically considered EM wave propagation inside an empty rectangular mine tunnel where imperfect walls are considered. The modal expansion of the fields is complicated by the coupling of the basic modes by the imperfect walls. They have developed a geometrical ray analysis and applied same to the rectangular waveguide when all four walls are imperfectly conducting. They have shown that the percentage increase in modal attenuation due to a typical wall roughness for mine tunnels increases with frequency, although the overall attenuation is always a decreasing function of frequency due to a more grazing incidence of rays on the guide walls.

C. VF

Two functional requirements exist for VF communications in underground mines: 1) to provide a link through the earth to the surface, and 2) to provide in-mine communications. The extensive analytical investigation of EM location schemes relevant to mine rescue is found in selected publications which are summarized below; this work also includes, because of similarity, analysis of electromagnetic detection and through-the-earth communications. The review by Wait [14] of analytical techniques related to propagation in the earth provides a good summary.

1) CW Transmission with Loop Antennas: Transmitting antennas that have proved successful in location tests have consisted of either single-turn or multiple-turn loops, usually deployed in a horizontal plane on mine floors. Normally, the loop is sufficiently small that it can be treated as a magnetic dipole. The magnetic moment is NIA, where N is the number of turns, I is the loop current, and A is the loop area.

a) Horizontal loop (vertical magnetic dipole): The null location method utilizes a loop antenna, which is deployed by the miner in the horizontal plane and excited by a CW transmitter at a relatively low frequency. A null in the horizontal magnetic field exists directly above the transmitting loop. A small loop receiving antenna can be used to search for the null at the earth's surface, and the performance of an actual system has been evaluated experimentally in both coal and hardrock mines [15]-[17]. Essentially the same method has also been used to survey underground quarries [18].

b) Homogeneous earth: The surface magnetic fields of a small buried horizontal loop (vertical magnetic dipole) have been examined analytically by Wait [19] for a homogeneous half-space model of the earth. He has shown that the location of the loop can be determined from the complex ratio of the horizontal to the vertical magnetic field at a point on the surface, provided that the frequency is sufficiently low that the fields have a static-like behavior. Even if the usual null search were used, the information contained in the complex ratio might be useful in reducing the time required in the search for the null in the horizontal magnetic field. The above formulation and numerical results can also be applied to downlink transmission by application of reciprocity.

Although the transmitted field strength is normally computed for a specified loop current I, the power required to maintain the specified current is also of importance. To calculate the required power, the input impedance of the loop is required. Wait and Spies [20] have calculated the input impedance of a loop above a homogeneous earth and related this impedance to the power requirements for a downlink communication system.

c) Two-layer earth: Wait and Spies [21] have also considered the effect of earth layering on the location configuration by computing the complex magnetic field ratio at the surface when the vertical magnetic dipole is located in a two-layer earth. The null in the horizontal magnetic field is unaffected, but the structure of the fields away from the null is considerably modified unless the frequency is sufficiently low.

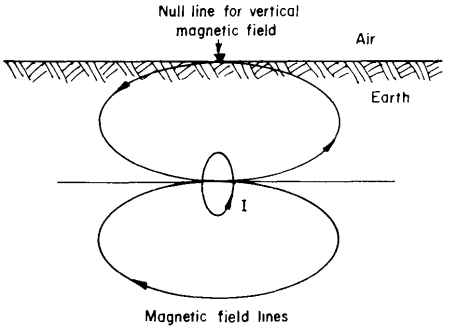

Fig. 23. Magnetic field lines for a vertical loop source (horizontal magnetic dipole)

d) Vertical loop (horizontal magnetic dipole): Wait [22] has also considered the surface magnetic fields of a buried vertical loop (horizontal magnetic dipole). The primary advantage of the horizontal magnetic dipole in location is that the overhead null occurs in the vertical rather than the horizontal magnetic field, as shown in Fig. 23. Consequently, the atmospheric noise, which has a smaller vertical component, is less of a problem. The disadvantages of a horizontal magnetic dipole are that the surface null is a line rather than a point and that a vertical loop configuration may be more difficult for a trapped miner to implement [23].

Another reason that the analytical solution for the horizontal magnetic dipole is useful is that it can be combined with the vertical magnetic dipole solution to yield the solution for a magnetic dipole as an arbitrary orientation with respect to the earth surface. Consequently, the effect of a tilted tunnel or earth surface on location can be estimated. Such effects have been examined both analytically and experimentally by Olsen and Farstad [17].

2) CW Transmission with Linear Antennas: The horizontal wire antenna has been shown experimentally to be effective for both downlink [24], [17] and uplink [25] transmission. One disadvantage of the horizontal wire antenna is that some type of grounding is required at the ends to allow sufficient current flow. However, Farstad [25] has successfully demonstrated the use of roof bolts for grounding in uplink transmission.

a) Infinite line source: The two-dimensional infinite line source model has analytical advantages over the more realistic finite line source considered later. The two-dimensional model is valid when the wire is sufficiently long and the observer is not located near either end.

b) Homogeneous earth: The subsurface fields of a line source on a homogeneous half-space have been analyzed by Wait and Spies [26], and numerical values have been computed for a wide range of parameters. The complex ratio of the vertical to the horizontal magnetic field has been shown to be diagnostic of the position of the receiver relative to the source. A location scheme involving two line sources, one with variable excitation, has been described by Wait [27]. By changing one line current, a null in the vertical magnetic field can be swept through the earth. Where the miner detects a null in the vertical field, he signals to the surface. Such signaling could perhaps be done seismically by a hammer blow.

c) Two-layer earth: The subsurface fields of a line over a two-layer earth have also been analyzed by Wait and Spies

[28]. The numerical calculations reveal that the subsurface field structure can be considerably modified by the layering.

d) Curved earth: The feature of a curved earth has been treated analytically [29], [30] by treating the problem of radiation of a line source at the surface of a circular cylinder. The radius of the cylinder is chosen to match the radius of curvature of the local topography. The calculations indicate that small curvatures have little effect on the subsurface fields, but that large curvature affects both field structures and magnitudes.

e) Finite-length line source: In order to handle the finite-length-line source analytically, the antenna is subdivided into short pieces and the total fields are summed numerically. The antenna is assumed to carry constant current, which is normally a valid assumption for insulated antennas grounded at the ends.

f) Downlink transmission: The formulation of the subsurface magnetic field has been simplified for efficient computation for the surface of a homogeneous half space [31]. Calculations reveal that for a cable length roughly twice the observer depth, the fields below the cable center are essentially those of an infinite line source. This has an important practical implication in that nothing is to be gained in field strength by making the cable longer. However, a longer cable will result in greater volume of coverage. The subsurface electric fields of the same configuration have also been computed [32]. The electric fields are important when reception is with a grounded cable rather than a loop [24].

g) Uplink transmission: The horizontal wire antenna has also been shown to be useful in uplink transmission where roof bolts can sometimes provide convenient grounding points. To account for possible tilts in either the mine entry or the earth surface, the case of a tilted finite line source has been analyzed [33]. Calculations of a magnetic-field component at the surface were made for a wide variety of parameters. These are the components of interest in miner detection and location when small loops are used for reception. Measurements by Farstad [25] of a horizontal wire in a hardrock mine have demonstrated good signal detection for antenna depths greater than 900 m. In fact, the location of the overhead null in the vertical field, which may be useful in location, was also shown to be feasible in rough terrain. Calculations indicate that the infinite wire result is not reached until the cable length is several times greater than the cable depth. Thus, the cable should generally be made as long as possible to achieve maximum signal strength.

3) Pulse Transmission with Loop Antennas: It is also possible to pulse or shock excite a loop antenna for use in electromagnetic location. In this case the loop current is a pulse waveform rather than a CW or time-harmonic waveform. The transmitter could be a single battery-switch combination or a more sophisticated waveform generator.

a) Horizontal loop: The geometry of interest in location is a vertical magnetic dipole for the buried transmitting loop. An overhead null exists in the horizontal magnetic field as it did in the CW case, and a pulse system has been tested using the null technique [34]. However, the waveshape distortion which occurs in propagation to the surface contains information on the loop location including the depth. No experimental attempt has yet been made to utilize the waveshape information. All of the following results assume a homogeneous half-space model for the earth and an earth conductivity which is independent of frequency.

b) Vertical magnetic dipole: As in the CW case, the solution simplifies when the loop is sufficiently small to be treated as a magnetic dipole. The case of an impulsive or delta function loop current was treated first [35] because it is the most basic transient excitation. Calculations of the vertical and horizontal magnetic-field waveforms at the surface were performed for a wide variety of parameters. It was shown that the waveshapes contain information on the loop location and that a knowledge of earth conductivity is an aid in interpreting the waveshape information. Similar results for step-function excitation have been obtained by integration of the impulse response [36]. These waveforms contain an equal amount of location information. An exponential excitation is also of interest since it is the current waveform which results from discharge of a capacitor into a resistive loop.

Responses for exponential excitation have been obtained from impulse responses by convolution [37]. The waveshapes are influenced by the time constant of the exponential, but the location information is preserved.

The possibility of passive detection and location has also been analyzed. The transmitting loop at the surface sends out a pulse which excites a current in the scattering loop which is set up by the trapped miner. This current radiates, and the receiving loop (or loops) at the surface hopefully detects this reradiated field. Calculations reveal that the reradiated signal contains location information but is of very low strength. A more practical system might allow the miner to modulate the loop impedance in some manner while some sophisticated signal processing is employed at the surface to increase the signal-to-noise ratio. This idea has never been explored theoretically or experimentally, but there has been some interest in passive detection [23]. The obvious advantage is that no power is required by the miner.

c) Finite-size loop: It is often desirable to make the transmitting loop quite large in order to increase signal strength, particularly in the downlink case where a large area is normally available. In such cases, the usual magnetic dipole approximation may not be valid, and the finite loop must be taken into consideration. Calculations of the transient magnetic fields (both uplink and downlink configurations) have been made for various sizes of loops [39]. In general, the response waveforms became more spread out and less peaked as the loop size is increased.

d) Vertical loop (horizontal magnetic dipole): As in the CW case, there are two main reasons for analyzing the pulsed horizontal magnetic dipole. First, it may be a useful source for location because it has an overhead null in the vertical magnetic field for which atmospheric noise is less of a problem. Second, the solution can be combined with that of the vertical magnetic dipole to yield the solution for a magnetic dipole at an arbitrary angle to the earth–air interface. The configuration that has been analyzed [40] for a horizontal magnetic dipole and the loop current was an impulse. The surface magnetic-field waveforms were computed and were found to contain information on loop location.

4) Pulse Transmission with Linear Antennas: As with loops, only a small amount of experimental data is available for transmission of pulses with horizontal wire antennas [24]. The following is a summary of the limited analytical results available for downlink transmission of pulses with line sources.

a) Infinite line source: The simplified two-dimensional model of an infinite line source on a homogeneous half-space has been analyzed [41]. The subsurface electric and magnetic-field waveforms were computed for an impulsive source current, and the waveforms were generally found to become stretched out and attenuated as the observer moves away from

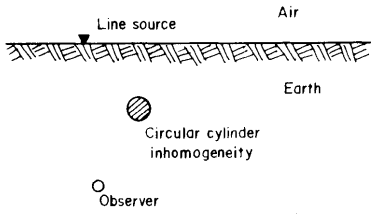

Fig. 24. Two-dimensional geometry for a cylindrical discontinuity.

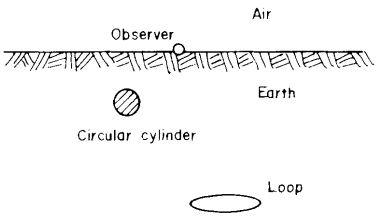

Fig. 25. Circular cylindrical discontinuity with a vertical magnetic dipole source.

the source. If desired, results for other current waveforms could be obtained by convolution.

b) Finite-length line source: A finite-length line source on a homogeneous half-space has also been considered [32]. The subsurface electric-field components were calculated for a step-function current. The horizontal electric field corresponds to the component measured by Geyer [24] with a grounded cable receiver, and at least quantitative agreement was obtained for the waveshape.

5) Scattering by Obstacles: Generally the overburden is not homogeneous, and inhomogeneities can distort fields and cause errors in source location. Layered earth models, which were mentioned earlier, mainly provide insight into field strength effects. Such models provide no prediction in source location errors because their horizontal uniformity does not produce any shift in the overhead null. To examine source location errors, models that are nonuniform in at least one horizontal direction are required.

a) Two-dimensional geometry: Even two-dimensional geometries can be quite complicated analytically because of the effect of the air–earth interface on the scattering by a cylindrical inhomogeneity. A problem that has been successfully treated by Wait [42] and Howard [43] using different methods is illustrated in Fig. 24. A line source is located at the surface, and a cylindrical inhomogeneity (which could represent a pipe, rail, or elongated ore body) causes a distortion of the subsurface field. Such distortion could affect the feasibility of the location scheme outlined by Wait and Spies [26], which relies on the complex ratio of the vertical to the horizontal magnetic field to determine position. The solutions of Wait [42] and Howard [43] agree quite closely in a common range of validity, and their numerical results indicate significant location errors for certain ranges of parameters.

b) Three-dimensional geometry: Three-dimensional geometries are of such complexity that either an approximate or a highly numerical treatment is required. A given configuration can be made three dimensional by the introduction of a finite source (such as a magnetic dipole) even though the inhomogeneity may be two dimensional (such as a long pipe). For example, Stoyer [44] has treated the effect of a half layer on the fields of a buried vertical magnetic dipole. The fields are three dimensional even though the overburden is two dimensional. Stoyer's calculations reveal that significant location errors can occur unless the dipole is located far away from the layer boundary.

c) Cylindrical obstacle: The effect of an infinite circular cylinder on the surface magnetic fields of a buried vertical magnetic dipole has been examined [45]. The conductivity of the cylinder is arbitrary, but the frequency is assumed to be sufficiently low that currents in the overburden can be neglected. Calculations reveal that significant location errors can result if the cylinder is sufficiently close to the interface. A rather complicated treatment of the problem that considers overburden currents and the air–earth interface effect has been presented by Howard [46].

The effect of a finite-length cylinder has also been considered in an approximate treatment. The infinite cylinder is now a finite length, and the small loop source is replaced by either a finite-length line source [47] or a long narrow loop [48]. Calculations again reveal significant location errors when the cylinder is near the surface. Also, the calculations reveal that the cylinder must be extremely long before the results approach those of an infinite cylinder.

d) Spherical obstacle: The effect of a spherical obstacle (such as an ore zone) on the surface magnetic fields of a buried vertical magnetic dipole has also been examined [49], and overburden currents are included in the treatment. The calculations reveal that location errors caused by small spheres are small.

The above treatment has been specifically applied to the calculation of the shift in the null of the horizontal magnetic field when the sphere is near the surface [50]. Such a treatment could apply to manmade obstacles such as vehicles or machinery. The calculations reveal some secondary nulls in some cases, but the null shifts are still small for vehicle-size obstacles. Farstad [25] has observed experimentally that the presence of a van has only a very localized effect on the surface magnetic fields.

e) Prolate spheroidal obstacle: The effect of a prolate spheroidal obstacle on the surface magnetic fields of a buried vertical magnetic dipole has also been examined [51]. The geometry is the same as that in Fig. 25 except that the cylinder is replaced by a prolate spheroid. The prolate spheroid is a useful shape to analyze because the axial ratio can be varied to obtain shapes ranging from a sphere to an infinite cylinder. Unfortunately, the mathematical difficulties only allow the case where overburden currents are neglected and the spheroid is perfectly conducting to be handled conveniently. Calculations indicate that the strength of the anomalous fields increases as the length of the spheroid is increased. However, the location errors are still small unless the obstacle is close to the interface and in the vicinity of the source loop.

D. Leaky Feeder Transmission Lines

1) Theory: There has been international interest in the application of leaky feeder transmission lines as a means of extending the propagation of radio underground. From an analytical viewpoint, the majority of the initial work has been in Europe with two principal pioneers—Professor P. Delogne of Belgium [52], working in collaboration with the personnel of the Institute of National Extractive Industries (INIEX); and Dr. David Martin [53] of the National Coal Board of U.K. One excellent summary of work in the area of leaky feeder transmission lines is found in the proceedings of the April 1974 Colloquium on Leaky Feeder Radio Communications

[54]; also, numerous papers in the *Proceedings of the International Conference, "Radio: Roads, Tunnels, and Mines"* [55] relate to the use and application of leaky feeders. Additional work has been done by Martin [56], Delogne [57], and Wait [58] in the analysis of waveguide systems.

There are several important considerations in the selection and application of waveguides relative to the type and the operating frequency. Let us first review the types of waveguides; the simplest is a single wire suspended in the mine entry [59], although it has been found under certain selected conditions in European mines, to be advantageous to use a two-conductor transmission line which will support two types of dominant modes, monofilar and bifilar [60]. In the monofilar mode, the forward current is carried by the transmission line, and the return current is carried by the tunnel walls or structure. In the bifilar mode, the return current is carried by the outer conductor. The advantage of the monofilar mode is that it is readily excited, or received, by an antenna located in the tunnel; it has the disadvantage of higher attenuation due to loss in surrounding rock or mine structure. An important consideration in these systems is the conversion from the monofilar or asymmetrical mode to the bifilar or symmetrical mode. Not only is the mechanism of mode conversion important, but in some installations how frequently the mode converters are inserted into the line is also important; if the transmission line is installed near the mine structure or walls, the attenuation of the monofilar mode will be high and reinforcement will be required frequently. If the means of mode conversion is incremental rather than continuous, as it is in the INIEX/Deryck [61] systems, the number of mode converters needed to maintain the level of the monofilar mode may become excessive in difficult installations.

The actual transmission line may be either a two-wire line, as in the INIEX/Deryck system, or a coaxial cable. The attenuation and excitation of the modes on a two-wire line have been studied both analytically [62], [63] and experimentally [61]. When the transmission line is a coaxial cable, the bifilar mode propagates between the inner and outer conductors, and the monofilar mode propagates via the outer conductor and the tunnel walls. Mode conversion is accomplished either discretely, by spaced discontinuities in the cable as in the INIEX/Delogne system [60], or continuously through a loosely braided outer conductor [64], [65] or through spaced slots in a solid external shield of a coaxial cable [66]; a good comparison of bifilar and monofilar transmission lines has been made by Martin [56], and a summary of various coaxial cable leaky feeder systems has been prepared by Lagace *et al.* [67]. The detailed analysis of conductors in tunnels of circular and rectangular cross section has been implemented by Wait *et al.* [62], [68], [69], [58]; it is interesting to note that Martin's design [64] has equalized the phase velocities between the monofilar and bifilar modes and that Wait [58] has shown that the phase velocity of the single-wire mode varies with the proximity of the transmission line to the tunnel wall.

2) Experimental Results: As discussed above, the location of the transmission line relative to the mine wall does affect performance; in particular the monofilar mode is attenuated. If the mine or tunnel geometry permits installation of the transmission line at least 0.5 m from the wall, these interference effects are minimized or are negligible. However, in the rectangular entries of many U.S. mines, the height of the coal seam significantly restricts free space and dictates installation at or near the wall of the mine. In these instances, bifilar transmission lines such as TV twin lead are unacceptable, as perhaps are some of the coaxial cables with discrete mode converters, such as the INIEX system. A good analysis of the effect of external structures to leaky feeder cables is given by Cree [70].

Another consideration in the selection of a leaky feeder transmission line is the selection of the optimum frequency, but before one can select the frequency the operating conditions must be defined. In the majority of European mining conditions, especially coal mining, the single-entry longwall method is used, as shown in Fig. 4. The communications requirements are between men in the intake and return entries and across the face or between these men and the surface. The signal radiated from the leaky feeder transmission line must be able to couple to a portable antenna only across the width of the entry, about 4 m and vice versa.

Typically, there is a rather high total system loss in the operation of a leaky feeder system. The coupling laterally from the main axis of the cable varies inversely with frequency; hence, the farther laterally from the transmission line one wishes to communicate, the higher the frequency required. Contrast this requirement with the fact that the higher the frequency, the higher the loss in the coaxial cable. Hence, frequency has to be optimized—it should only be high enough to obtain the desired range of lateral coupling to the waveguide. In the case of a European longwall, the optimum frequency would be chosen to meet the operational constraint of coupling to a transmission in the same entry. Higher frequencies would be necessary in U.S. longwall with the requirement for multiple entries, and a desire to establish communications in more than one entry. The selection of optimum frequency is a subject of debate. For example, Martin recommends [71] a frequency of 30 MHz or above to ensure efficient coupling to the loose braid cable used in Britain, while INIEX advocates [52] the use of 5 to 10 MHz although they have had difficulty in obtaining suitable portable transceivers to operate in this band. In the U.S. room and pillar mining method (Fig. 1) in a working section 200 X 600 m, to obtain coupling to all parts of the section would require the use of UHF frequencies (450 MHz); as shown above, with a centrally located transmitter, this coverage can be completed via wireless propagation and eliminates the need to continuously advance a leaky feeder system in a rapidly advancing mining operation. Details of implementation are discussed below.

To this point there has been no discussion of active repeaters or in-line amplifiers to extend the range of coverage. Without repeaters, the size and cost of the transmission line must be selected for acceptable performance; alternatively, line losses can be overcome with active equipment. Several techniques have been used. 1) Borrowing from conventional mobile radiocommunications practice, further individual fixed-base stations are installed at intervals as necessary to provide the total range, all stations being under a common remote control with the first. Such a system has been in use by the British Coal Board at the Longannet mine since 1970 [56]. 2) A series of one-way in-line repeaters, such as the daisy-chain system developed by Martin shown in Fig. 26, is effective; it does have a slight disadvantage that an audio return line is required and, when branches are required, the system can become complex. Martin has recently developed a bicoaxial system [71] that appears to eliminate the problems of the daisy chain while maintaining the advantages, at the expense of a slightly more expensive system installation. 3) Multiple-frequency repeater schemes have been used successfully; the simplest uses one transmitter and

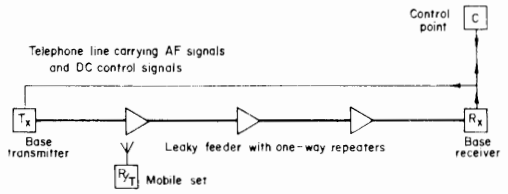

Fig. 26. Block diagram of NCB "Daisy Chain" repeater system.

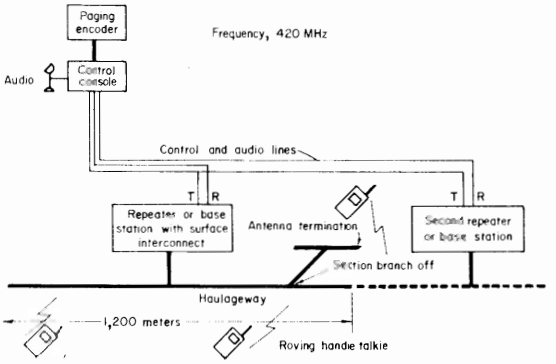

Fig. 27. Two-frequency repeater concept.

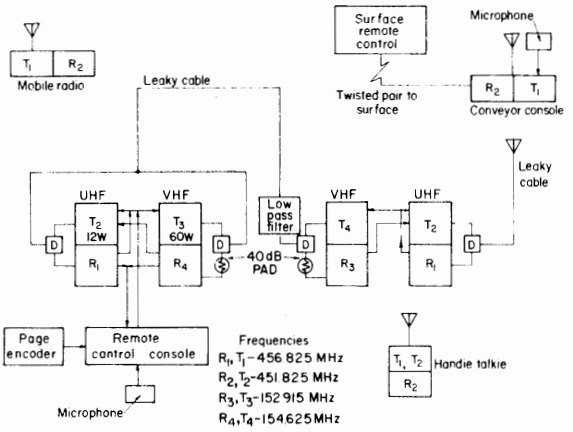

Fig. 28. UHF/VHF repeater system.

one receiver [72] as shown in Fig. 27. Where extended range is required, the multiple-frequency system as shown in Fig. 28 has been used successfully [73].

IV. Hardware Development and Evaluation

Initial work has shown that no single communication system underground meets all requirements. However, there seems to be some particular type of communication technique applicable to all problems that have been identified; hence, we find the use of hybrid systems provides the most realistic means of implementing all the communications requirements. From the surveys described above the need has been identified for the following types of communications [74]:

1) improved methods to reach roving miners, either one-way (paging) or two-way (walkie-talkies);
2) improved telephone systems that provide additional channels and perhaps a secure supervisory channel;
3) improved haulageway communications in terms of both reliability and maintainability;
4) mine monitoring systems to identify potential problem areas in underground workings;

Fig. 29. Miner wearing pocket pager.

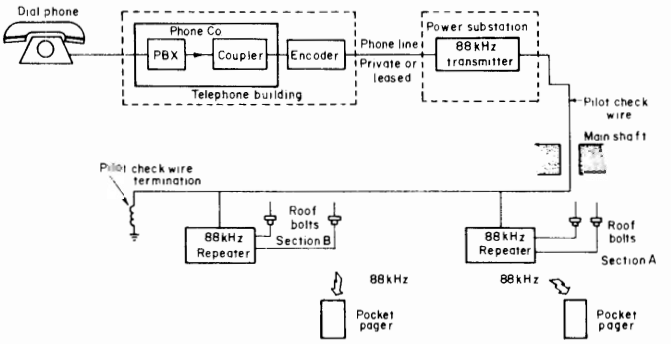

Fig. 30. Dial encoder for whole-mine paging system.

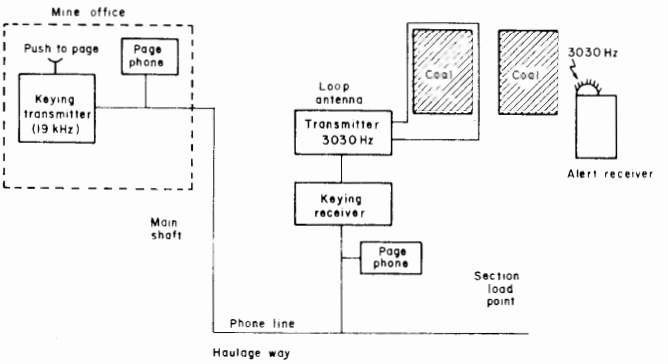

Fig. 31. Call alert paging system.

5) improved hardware that is more maintainable and reliable under emergency conditions.

A. Roving Miner Paging

1) Along-the-Roof Paging: The primary carrier current frequency for communications systems in U.S. mines is 88 to 100 kHz. Experiments have shown that, with the proper sensitivity receiver, these carrier current signals could be received well beyond the entry in which the trolley wire is placed; in fact, in many mines carrier current signals are clearly receivable eight entries away from the trolley wire. In working sections where dc face equipment is employed (which is powered from the trolley wire), the carrier current signals are also readily detectable in the face area. However, where dc face equipment is not available, it has been found that through the use of a

Fig. 32. Call alert receiver worn by a miner.

unique repeater system [72] the signals can be easily extended up to the working face. The repeater system consists of a carrier current transceiver as normally employed underground; however, the output from the transmitter is connected to two roof bolts spaced about 20 m apart so that the electromagnetic signal is pumped into the roof. Complete coverage of a working section can be attained by this technique with range up to a 300-m radius. To implement this particular technique, a commercially available pocket receiver was chosen (Fig. 29). The device can be selectively coded so that only the individual who is being paged will hear the message. However, in case of an emergency, an all-call feature is available that permits notification of all personnel simultaneously. Various encoding schemes can be used, from a simple pushbutton for each particular pager to a more sophisticated scheme shown in Fig. 30 in which the dial telephone on the mine site is used as the encoding device.

2) Call Alert Paging: This function is somewhat similar to the "bleep-bleep" paging developed for U.K.'s mines some years ago.

A simple call alert system is illustrated in the block diagram, Fig. 31. From an office, a signal outside the audible voice range is applied onto the telephone lines to alert an individual that he should call the office. The keying receiver at the section telephone receives the signal and activates a ULF transmitter that causes a current to flow in a one turn loop that is formed by wrapping a wire around a pillar of coal; thus a magnetic field that permeates the region within about 300 m of the loop is set up. A small pocket-type receiver containing a pickup loop responds to the presence of the ULF signal by a flashing light and an audible tone, notifying the person alerted to call the office.

A more complex version has been developed that allows a call to originate from any dial phone in the mine phone system (Fig. 32). All underground phones have call-alert features and a coded PSK signal to permit mine-wide selective calling. When an individual receives an alert, he dials a precode and then his own alert number and the PBX automatically dials the party who initiated the "alert" call.

3) Trapped Miner Alert: An additional potential benefit from these systems results from the fact that the VF signal from the horizontal loop forms a vertical magnetic dipole, and the signal penetrates the overburden. It has been possible to receive such signals on the surface some 300 m above the loop. Thus miners in a postdisaster situation can use the call alert transmitter for emergency signaling that can be detected on the surface. The receiver for detecting a "trapped miner" signal is illustrated in the block diagram in Fig. 33, and the hardware is shown in Fig. 34. This receiver is very similar to the call alert receiver; however, the loop antenna is packaged separately and is used to assist the surface rescue workers in determining in what direction they should go, and when they are in a very strong field, they search for the null that comes when the receive loop is directly above the transmit loop. The transmitted signal is on for 0.1 s, and off for 0.9 s to conserve power and improve signal detection in background noise. A helicopter-carried search receiver has been developed, and there is a complete series of hardware to allow voice messages to be transmitted from the surface and received underground, and for the underground to transmit code-type messages in response to the voice messages received. Also, a version of the "call alert" transmitter with about 27 m of wire has been made into a small package and is carried by the miner as shown in Fig. 35.

A refuge shelter communications system is being developed. A block diagram (Fig. 36) illustrates the transmitter and receiver. The total system is comprised of two identical units, one located in the underground shelter and the other on the surface. An operator keys in the message to be transmitted on the very simple input keyboard. The inputted message is displayed on the "message to be transmitted" display. The message is transmitted when the operator presses the "send" key. When the send key is depressed, the microprocessor moves the data to the modulator, keys the transmitter, and connects the transmitter to the loop. The system is intrinsically safe and develops a minimum of 10 W into a 120-m loop. When a message is received, the "receive message alarm," both audio and visual, is activated to alert the operator of an incoming message. The received message is displayed on the "receive message" display. The delayed message transmission is at one character per second.

4) Remote Access Monitoring: In recent developments the monitoring of air velocity, methane, carbon monoxide, and temperature has become associated with underground mine telephones. A system has been developed to remotely access the sensor information from the underground and to transmit it via VF to the surface.

B. Remote Access Monitor

This is very simple monitoring. Each of the environmental monitor sensors has a preset threshold. The monitor can, therefore, indicate two conditions for each sensor. If the environment at the monitor is below the sensor threshold, the monitor indicates a "normal" condition. If the environment has exceeded the threshold of any of the sensors, then the monitor indicates an "abnormal" condition for each affected sensor. The selection of sensors for use in the mining environment is critical to the success of such a system [75], [76].

To activate the underground receiver, a surface transmitter, located approximately over the underground loop, is keyed to transmit a triggering signal of at least 12 s duration. Upon receiving a signal, the receiver will apply power to the sensors;

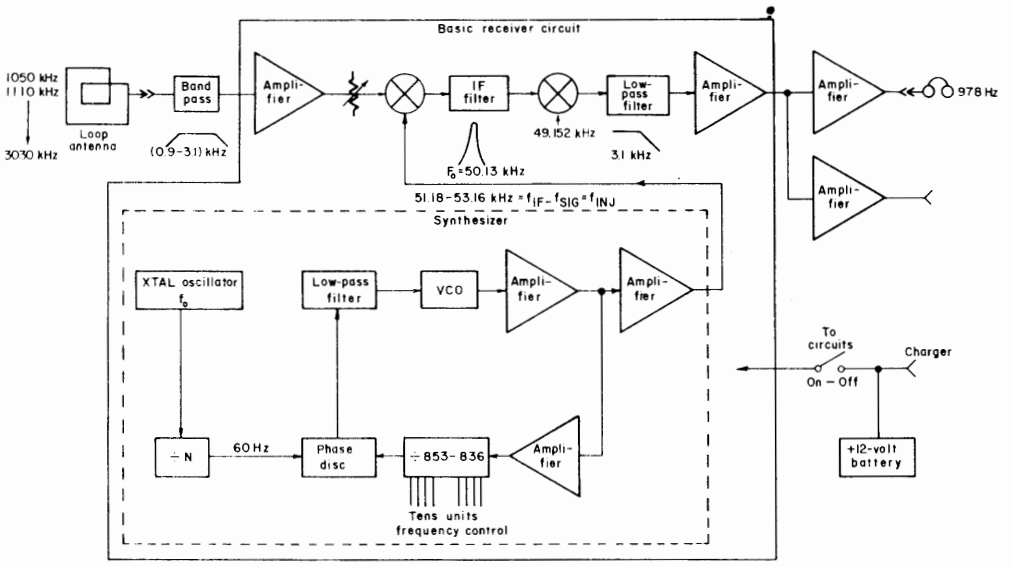

Fig. 33. Man-carried receiver system for trapped-miner location.

Fig. 34. Surface receiver for detection of trapped miners.

after 2 min the encoder is activated, and a coded data word is formed which indicates the status of the sensors. After the data word is formed, the VF transmitter is keyed to transmit the data word three times in succession. After the completion of the transmission, the activating receiver shuts down power and awaits the next triggering signal. The surface monitor is the VF receiver that is used to locate a postdisaster alert signal. The receiver has both visual and audible indication of the underground message.

Seismic Trapped Miner Signaling: In the seismic system, the trapped miner signals on the mine floor with a timber or sledge hammer, and multiple geophone arrays on the surface can detect signals in the majority of areas in overburdens less than 150 m deep. Various signal-processing techniques enhance the signal-to-noise ratio; the predominant noise sources during a rescue operation are surface-generated noises from moving equipment, people walking, and power lines. A variety of processing schemes have been tried [77]; the computation of the location of the trapped miner by using the differences in the arrival time of the signals at the various geophone arrays has been quite successful when the leading edge of the miner-generated pulses is of adequate clarity to accurately obtain arrival times. A seismic location system has the advantage that the miners do not have any special equipment and need only be trained in how and when to signal. The disadvantage is that discontinuities in the overburden can significantly affect rescue signal propagation relative to both detection and computation of location of the signal. Additionally, in a rescue and recovery operation, the time required to deploy and relocate, if necessary, a massive geophone array may hamper the progress desired. However, until a suitable alternative is available, the seismic scheme does provide the miner with an additional degree of protection. The Mining Enforcement and Safety Administration (MESA) does maintain a seismic rescue system as part of its Mine Emergency Operations group [78]. Additional work is nearing completion ih terms of optimizing the hardware.

The advantages and disadvantages of the seismic approach have been identified above. Also in the work described above, the propagation of VF signals through the overburden has been thoroughly analyzed. The advantages of an electromagnetic scheme for the detection and location of trapped miners are that it would not require the time-consuming deployment of geophone arrays—in fact, the site could be scanned by helicopter—and that the propagation of a VF signal through the overburden would not be so susceptible to typical overburden anomalies as is the seismic approach. The disadvantage is that a piece of special equipment (a transmitter) is required underground. Considerable efforts have been directed toward development of suitable hardware and evaluation of same in operating mines [79]. The present configurations consist of a transmitter [80] with dimensions of 6.25 X 3.2 X 1.5 cm, which, when connected to an external loop of wire 25 m long, generates a peak magnetic moment of 1000 A · m^2. The transmitter and the antenna have been packaged two ways, on the left as an attachment to the top of the cap-lamp battery, and on the right as a self-contained unit to be worn on the miner's belt.

A recent modification to the system has been to incorporate an inductive voice receiver into the transmitting package so

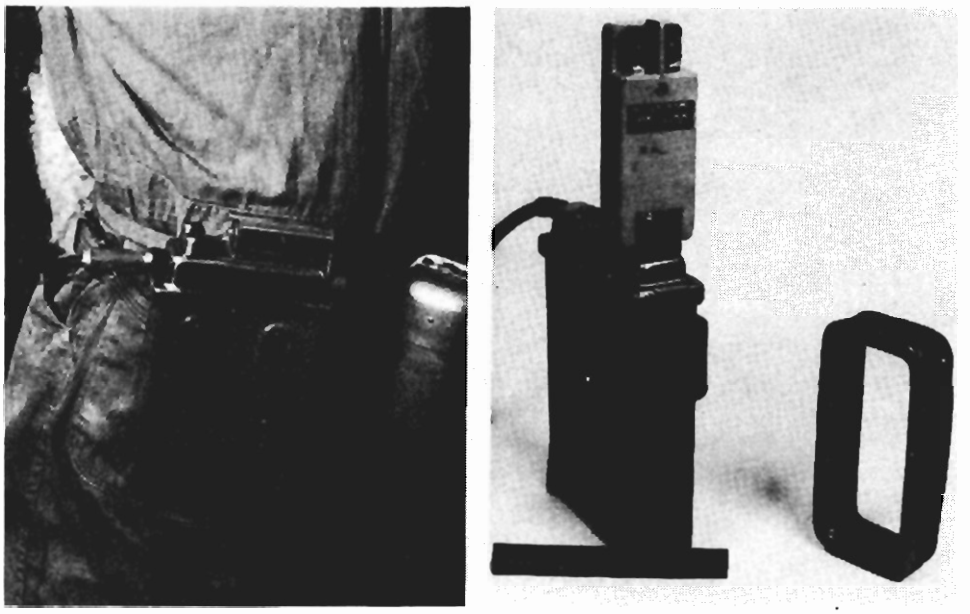

Fig. 35. Trapped-miner transmitter (left) on top of cap lamp battery (right) on belt.

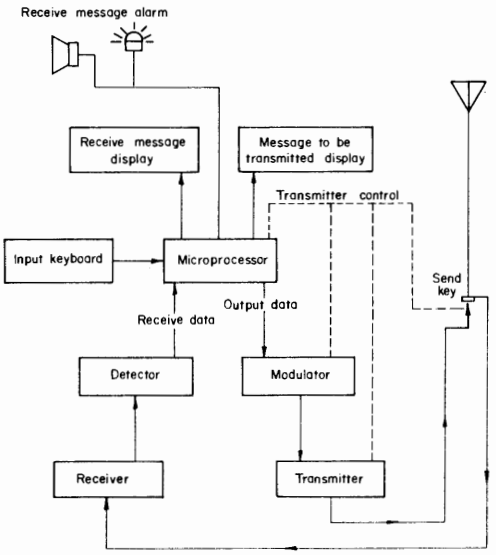

Fig. 36. Block diagram of refuge shelter communications.

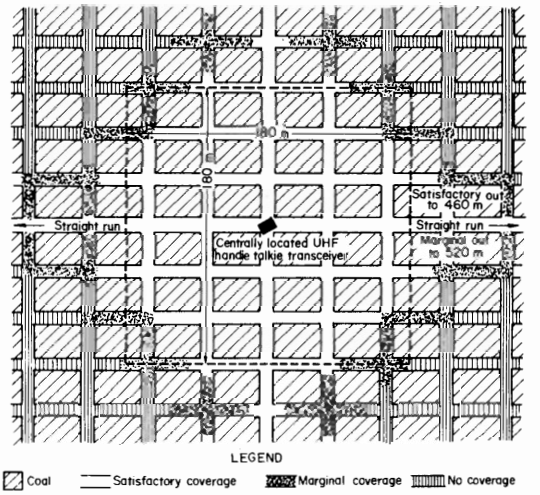

Fig. 37. Predicted UHF wireless radio coverage.

that, via a longwire or loop antenna on the surface, voice messages can be sent to the miner; he responds via code with his beacon transmitter. To support these transmitters, surface equipment has been developed—a receiver for handheld or helicopter-borne use.

C. Two-way Communications with Roving Miners

1) Two-way Wireless: Where possible, the establishment of two-way communications without the need to install, maintain, and extend or relocate leaky feeders is certainly desirable. As discussed above, there are two options—the use of UHF or LF. Presently available UHF portables (460 mHz) are small and also have small antennas. The recently introduced Mx series from Motorola is only 7.21 cm w X 3.58 cm d X 15.32 cm h in the 1-W model and has been certified by MESA to be intrinsically safe for use in gassy areas of underground mines [81]. The limitation on the operation of this type of radio in a room and pillar section (Fig. 37) is the intrinsic electrical noise of the receivers.

In coal seams that are 1.5 m or higher using walkie-talkies with a transmitting power of 2 W and receiver sensitivity of 0.5 μV for 20 dB of quieting, the operating range is about 90 m. With such a system the signal losses of UHF (450 MHz) in a straight entry restrict operations to about 550 m. However, in room and pillar workings, if the communicators are not in the same entry, there is a corner loss of about 60 dB, and additional losses due to depolarization of signal increase the overall antenna coupling loss to about 45 dB. A distance of 90 m around a corner is equivalent in signal loss to 550 m of straight-line communications. Though a range of 90 m is useful, the required range is more like 180 m. The range can be doubled by placing a repeater in a central location.

To operate in the repeater mode, the portable units transmit on f_1 and receive on f_2. This allows a centrally located repeater station to pick up f_1 transmissions and retransmit them for f_2 reception by other personal radios, thereby doubling the roving-miner-to-roving-miner range.

Fig. 38. South African rescue team radios.

A coupling unit has been built that interfaces between a newly developed mine telephone and the UHF repeater. It is possible to call from any telephone to a wireless unit; a reverse-direction call is limited to one predetermined phone number but can be transferred.

Alternatively, to use LF equipment based on the results listed above would give extended range; presently the availability of LF transceivers suitable for mine use is rather sparse. One exception is the rescue team radio developed by the South African Chamber of Mines [82] which operates on 335 kHz single sideband. These units, Fig. 38, are 94 mm h × 222 mm w × 2571 mm d, weigh 3.7 kg, and require a bandolier-type antenna which is elliptical (660 × 420) mm and weighs 0.9 kg. The system is not small enough to have a man carry every day. Work is currently underway in the development of a smaller LF transceiver operating at 520 kHz, but this device will still require a bandolier antenna; unfortunately it appears as though at these lower frequencies there is no way currently available to reduce antenna size and obtain acceptable radiation efficiency. Anticipated range from the 520-kHz transceiver is 450-m radius in a room and pillar section.

Areas where either UHF or LF radio can be used underground beneficially, even with the limited range, are: 1) rescue team radio communications from fresh air base to rescue team, 2) section communication between miners, and 3) on haulageways between motorman and helper (snapper) who must couple and uncouple cars of coal [83].

2) Leaky Feeders: Where communication requirements are in excess of the ranges presently available, an alternative is to use a leaky feeder to extend range. There are a variety of approaches presently in use or under evaluation as described below:

a) Longwire antennas: We have taken the liberty of including the following installation here because of the functional comparison—rather than leaky feeders they are in fact loop-to-loop inductive systems. Such loops have been used extensively in Europe with portable transceivers [84] to cover a working longwall and for communication between locomotives and to a base station [85].

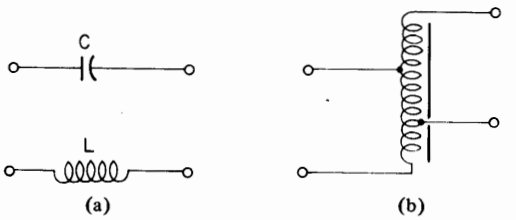

Fig. 39. INIEX mode converters. (a) Narrow band. (b) Wide band.

They have the advantage that they are made for single-conductor insulated wire and the disadvantage that, at least under certain circumstances, loop tuning and loading are required. When branch circuits are employed, splitters are necessary.

Longwire single-conductor antennas typically terminated at the ends have been used in some instances [59]; however, their relatively low efficiency and susceptibility to loading by parasitic structures has made their use relatively infrequent. (The single-wire mode is the principal mode of the poor-quality coaxial cable formed by the mine entry and the conductor (transmission line).) Additionally, in most mines the miscellaneous conductors already present in mine entries are almost as effective as the properly installed cable.

b) Twin-wire feeders: Coaxial Leaky Feeders—A variety of parallel feeder cables such as TV twin lead have been used with and without mode converters. The concept with mode converters has been designated the INIEX/Deryck system [86], after the developers, and is similar in design to the INIEX/Delogne system described below. With or without mode converters, the system is lower in cost than the coaxial systems, but it has seen little use in mines because of attenuation with proximity to structures and debris on the exterior of the cable.

c) The INIEX/Delogne system: While various techniques have been used to implement the exchange of electromagnetic field(s) between the coaxial transmission line and the cavity of the mine entry, in the INIEX/Delogne system a complete annular gap in the external conductor of the coaxial cable is used [52]. To reduce the uncertain loss of the gap, a circuit as shown in Fig. 39 is used. Two types of circuits are in routine use. In the first, which is selective, the gap is shunted by a capacitor, which reduces its impedance, while the capacitance effect is compensated at the operating frequency by a induction coil inserted in the external conductor. The bandwidth is about 20 percent.

In a second type, wide-band operation is obtained. It consists of a transformer with the windings running in a direction so that no magnetic flux would be created by the coaxial mode if the number of turns was equal; a slight difference in the number of turns is sufficient to achieve radiation.

The INIEX/Delogne radiators are available commercially as shown in Fig. 40; they are made so that the tuned elements can be easily replaced if frequencies are changed. The system has been installed principally in Belgium and France; other known experimental installations have been made in Germany and the U.S.

d) Loose-braid cables: These cables, which have principally been designed around the work of Martin [71], are available from the British Insulated Cable Corporation and the Times Wire and Cable Corporation. The braid covers about 67

Fig. 40. Mode converter using INIEX concept.

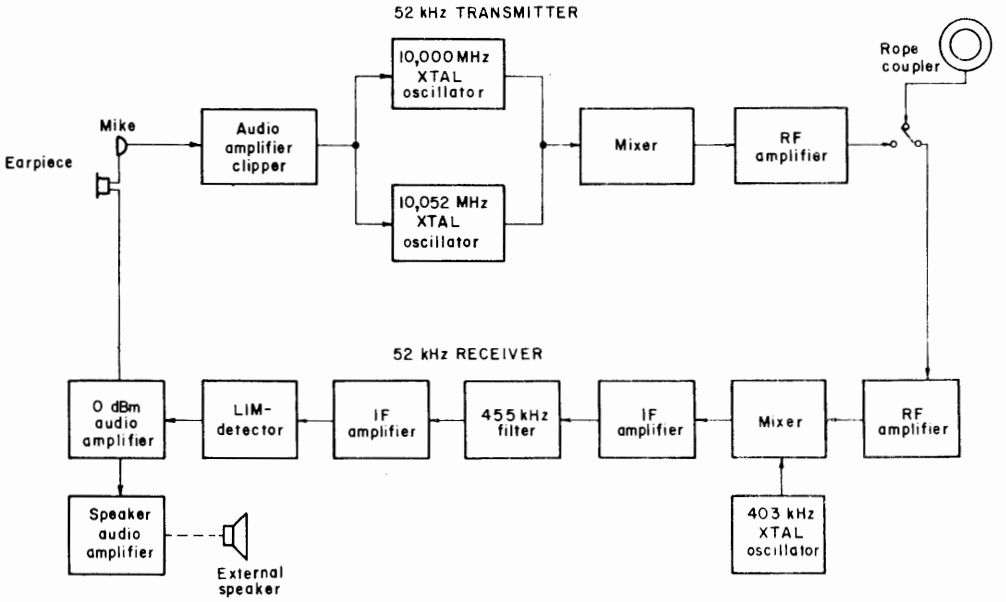

Fig. 41. Block diagram of hoist phone.

percent of the exterior, as opposed to 95 percent for the normal cable.

e) Slotted shield cables: Slotted shield cable is designed so that the outer shield of the helical coaxial cable is milled away to provide slots or apertures about 0.5 X 0.1 cm about every 2 cm. The cable is more expensive than some of the others described but has performed quite well in numerous applications; applications include the U.S. and Canada, as well as abroad.

The selection of the type of leaky feeder depends on the type of requirement and whether an active or passive system is used. It appears as though in some cases the use of in-line repeaters with low-cost cable can be more cost effective than the larger, lower loss cable. Traditional repeaters have not been discussed in detail; reference has been made above to the British daisy-chain amplifier scheme [71], which is commercially available with a line-powered repeater.

D. Hoist Communications

While most coal mines in the U.S. are less than 300 m deep, there is a trend toward deeper mines, and some metallic and nonmetallic mines are presently working at depths in excess of 1500 m. A need exists for improved hoist communications between the skip and the hoist operator. Two systems are presently used today: One uses a trailing cable to provide communications, and the second inductively couples the carrier current signal over the hoist rope. The former has limitations in terms of depth because of the amount of cable that can be trailed from the cage, and the latter has limitations at great depths because signal dead spots develop on the hoist rope. A technique evaluated to overcome this problem involves the use of the two-frequency concept where a dual-frequency transceiver simultaneously monitors two frequencies (approximately 30 and 52 kHz simultaneously) and selects the highest signal for use; hence, the null from a standing wave would not be at the same location for these two dissimilar frequencies. However, results of evaluations [87] have shown that with improved sensitivity the dual frequency is not required. Tests to date on a 1600-m-deep shaft have been quite successful.

Transceivers have since been developed which combine a low-power transmitter and a sensitive receiver with battery, handset, and speaker into a very compact unit. Fig. 41 is the block diagram of the unit. The current in the rope induces a voltage in the coupler which is applied to the RF amplifier. The amplified signal is fed into a balanced mixer and is mixed with a 430-kHz signal from the crystal-controlled injection oscillator. The resulting 455 kHz is amplified and filtered by a mechanical filter with 13-kHz bandwidth. After additional amplification, the audio is taken from a limiter-detector and modified to 0-dBm level for the handset earpiece and to a

Fig. 42. Hoist-phone couplers.

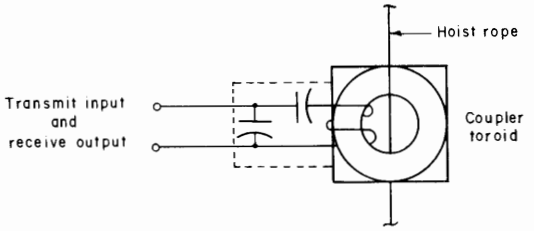

Fig. 43. Coupler for hoist phone.

2-W level for the speaker. The receiver sensitivity is about 5 μV for 20 dB of quieting.

In the transmit mode, the output of the handset carbon microphone is fed into an audio-clipper amplifier. The audio modulates two crystal oscillators using variable capacitance diodes to pull the crystals the desired 3 kHz. The two frequencies are injected into a mixer and produce a 52-kHz difference frequency. The 52 kHz is amplified and fed into a series tuned circuit which couples the signal to the hoist rope. The RF power into the coupler is less than 1 W.

Coupler: The coupler, Fig. 42, transfers RF energy to and from the hoist rope. The toroid secondary, the hoist rope, can be considered to have one turn. The induced voltage creates a current flow through the rope, the cage capacitance to the shaft walls, and back through the conductive earth shaft walls to the hoist rope at the head frame. This current flow then induces a voltage in the other coupler, which also encircles the hoist rope, as shown in Fig. 43. The inductance of the magnetic core toroid is series-tuned with a capacitor. This circuit is shunted with another capacitor, which improves the impedance match to the transmitter. The series-tuned circuit increases the V-A to produce increased induced voltage in the hoist rope.

The increased voltage in the hoist rope, along with an improved sensitivity of the receiver, has eliminated the dead spots as the hoist rope is lengthened.

Other approaches to hoist communications have been and are being implemented via leaky feeder cables in the shaft and in some instances with VHF and UHF transceivers.

E. Improved Phone System

Several mines have begun installing dial telephone systems in order to achieve additional channel capacity [88]. However,

Fig. 44. Underground mine phone using frequency-division multiplex transmission.

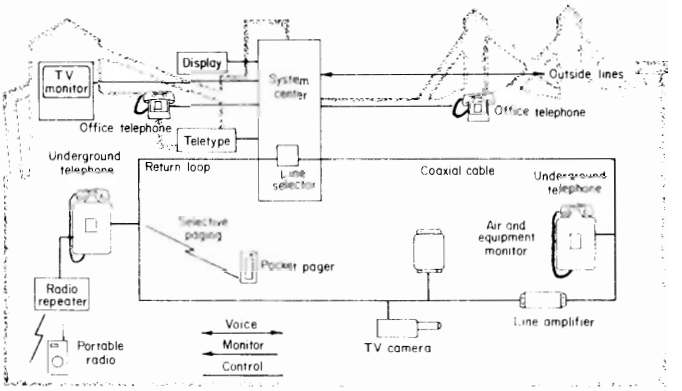

Fig. 45. Block diagram of mine communication and monitoring systems.

the problems of installing and maintaining multiple-pair cables (perhaps 50 pairs) in underground coal mines are difficult at best. Additionally, dial-type telephones only provide a ringing signal or a page at the phone locations and suffer the disadvantage that, normally, people are paging an individual who may be beyond the audible range of any specific phone location. A new phone system has been developed that overcomes the problems of extending the multiple-pair cable and reaching a person beyond the range of hearing the phone.

The phone shown in Fig. 44 has pushbutton dial capability and contains frequency synthesizers so that each channel is derived within the phone when required [89]. Also included in the phone, and operating as a part of it, is the call alert paging system. The use of coaxial cable for a phone line is a radical departure from present techniques; commonly a two-conductor twisted #12 wire is used. However, in view of the increased communications channels required both for voice communications and for mine monitoring, additional bandwidth must be achieved. One alternative is the use of additional conductors. However, the use of six pairs of wire with a messenger cable just to meet the phone requirements of a large coal mine is equal in cost to the cost of a 2.22-cm-diameter coaxial cable. The phone system with its ancillary functions has been designed around coaxial cable. Fig. 45 is an overall

Fig. 46. Mine monitor system.

diagram of a recently developed whole-mine monitoring and communication coaxial-cable system. The system utilizes frequency division multiplexing in the 7.08–10.6-MHz band and the 49.6–53.1-MHz band to provide simultaneously 300 3000-Hz voice channels, several hundred serial sequence monitor and control signals (7.083 and 49.79 MHz, respectively), and 13 TV channels through the coaxial cable distribution system with loopback and automatic switchover to permit the signal to be inserted at both ends of the cable if the underground cable is broken.

The EM paging system is dialable from any phone, and all underground phones have a paging loop emanating a signal with a paging range in excess of 300 m. When responding to a page, the responder dials a precode and its own page number. The system center automatically calls the phone that initiated the page. If the line called is busy, an interrupt is actuated to allow the page call to go through.

F. Mine Monitoring

1) System Configuration:

a) Mine monitoring: As the room and pillar mining method presents problems in terms of communications in all parts of the mine, it also presents complications from an environmental mine-monitoring viewpoint. Idealistically, one would like to have monitors at every point in the mine. Realistically this cannot be achieved; the concept of sensor installation and maintenance at a multitude of points is unrealistic. However, work has been underway to locate monitoring stations at key locations to identify potential problems at the station as well as in/by that point. By using a series of transducers at an air split to monitor methane, oxygen, carbon monoxide, and temperature, both in the intake and returns, as well as differential pressure between the intake and return airways, a realistic assessment can be made of conditions both at that point and toward the face area of the mine [90]. A system (Fig. 46) has been operating in an underground coal mine for several years, and it has expanded to the rest of the mine for an extended assessment of its capabilities.

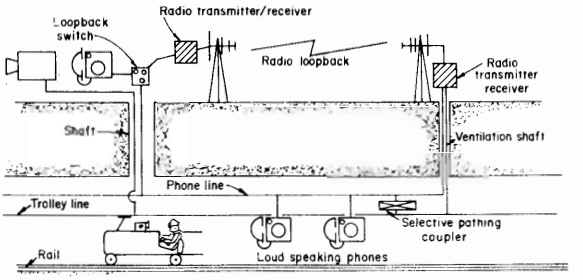

Fig. 47. Loopback concept.

Alternate systems are under development, and the most central aspect of environmental monitoring, the sensor, is undergoing evaluation and development [91].

European mines have made more extensive use of environmental and process central monitoring than most U.S. mines; however, their mining procedures make implementation easier, and the more labor intensive operations in European mines makes more craftsmen available for maintenance, calibration, etc.

b) Total system design–System implementation: All of the concepts described above are being integrated into an operational mine communications system which is being demonstrated in a large operating coal mine (3-million tons per year). Similar concepts have been designed for an underground iron ore mine and are being demonstrated. Techniques and technology are available to overcome many of the operational problems of underground mine communications. These techniques are being reduced to hardware that will be usable by the mining industry.

c) Systems reliability: The reliability of a mine communications system can be divided into three areas:

1) the performance of the equipment itself;
2) the availability of power for the particular devices;
3) the reliability of the waveguides of communications circuits.

The new prototype equipment described has been designed for reliability and ruggedness; all solid state circuitry is used, and special attention is paid to environmental (dust, moisture, and vibration) problems. Additionally, all equipment is operated either on primary battery supplies or, if it is powered from the ac main, has a battery that is float-charged so that in the event of power failure the systems will remain functional. The last consideration of the integrity or reliability of the communications channels is most important and is perhaps the most vulnerable of all parts of the hybrid system. In most U.S. coal mines, where the overburden is typically less than 300 m and where many access points to the mine are provided for purposes of introducing power and/or ventilation, there is a unique opportunity to provide "loopback" so that there is an alternative path into the mine in the event of an emergency or failure of the communications channel. This approach is shown in the simplified schematic drawing of Fig. 47. Loopback can also be implemented within the mine by routing the return cable through another part of the mine.

In the area of phone system reliability, work by Long *et al.* [92] has resulted in the development of techniques and hardware so that mine maintenance personnel can assess the performance of mine phone systems.

Also to be included in the area of reliability is that of safety—obvious concern has been raised about the safety of RF systems and the use of electrical blasting caps. The standard for aboveground protection has been IME Pamphlet 20 [93]. Because of the differences in underground operations, a study was conducted by Thompson [94] to assess the hazard. The results show that with radiated powers of less than 1 W there is no hazard. Additional related studies are presently underway.

d) Remote control:

i. Stationary devices: There are many rules and regulations [3] that require monitoring, such as ventilation fans; and there are other situations which, in addition to the environmental monitoring discussed above, it is advantageous to monitor. Additionally, in many circumstances not only is monitoring desirable, but so is control of the device monitored—obvious situations are pumps, circuit breakers, etc. Presently those monitoring and control schemes are implemented via carrier over mine phone or power lines or via tone codes over braided telephone lines on the surface. In conjunction with the environmental monitoring work [90], automatic control of ventilation regulations are being evaluated.

ii. Machinery: The implementation of umbilical cord control for continuous miners has been quite successful in the United States, and radio remote control is gaining rapid acceptance [95]. Remote control for continuous miners is available from all of the major mining machine manufacturers. Remote control and automation will continue to grow in acceptance, but the changes must be evolutionary rather than revolutionary. In both the U.S. and Britain, major programs have been implemented to expedite the development of these systems for coal production.

In Europe there has been considerable attention to radio control, primarily of longwall shearers, and to cable-operated control for transport of men and materials [96].

As the use of radio remote control expands, extreme care must be exercised that false starts (or stops) of equipment are not caused by stray signals from similar controllers in other parts of the mine.

V. Conclusions

The problems of underground mine communications can be solved; this paper has presented a variety of concepts that have been developed and experimentally evaluated in mines. No single concept provides a universal solution, but hybrid scheme systems which address all problems can be, and are being, implemented.

The principal short-term effort needs to be in the development and/or modification of hardware that is small enough and rugged enough to suit the underground mine requirements. General surface specifications would include environmental, shock and vibration, and intrinsic safety. The latter requirements vary from country to country, but there is a trend toward consolidation in the European community.

In terms of the application of this technology to other industries, while the majority of these discussions covered coal mines, applicability to noncoal mines is obvious; additionally underground tunneling and public works projects should benefit, but the major benefit will come to the industry for which this work has been directed—mining.

Acknowledgment

The authors wish to thank numerous people who made contributions in the development of this manuscript and in the administration or implementation of the work included, in particular H. Dobroski, H. K. Sacks, M. Stock, and M. Miller of the Bureau of Mines, and J. R. Wait of the U.S. Department of Commerce.

References

[1] I. A. Given, ed., *SME Mining Engineers Handbook*, Volume I (Society of Mining Engineers of the American Institute of Mining, Metallurgical and Petroleum Engineers, Inc.), Baltimore, MD: Port City Press, 1973.

[2] S. M. Cassidy, Ed., *Elements of Practical Coal Mining* (Society of Mining Engineers of the American Institute of Mining, Metallurgical and Petroleum Engineers, Inc.), Baltimore, MD: Port City Press, 1973.

[3] *Code of Federal Regulations, Title 30, part 7, Mandatory Safety Standards—Underground Coal Mines.* Washington, DC: U. S. Government Printing Office.

[4] S. D. Woodruff, *Methods of Working Coal and Metal Mines,* (three volumes). Oxford, England: Pergamon Press, 1977.

[5] Dravo Corp., "Analysis of large-scale noncoal underground mining methods," Final Rep. on Bureau of Mines Contract SO122059, Jan. 1974 (NTIS PB 234-555/AS).

[6] R. E. Greuer, "How overseas mines monitor ventilation," *Coal Age,* pp. 71–74, Jan. 1974.

[7] a) West Virginia University, "Analysis of communication systems in coal mines," Final Rep. on Bureau of Mines Grant GO101702, May 1973 (NTIS PB 225-862/AS).
b) Collins Radio Corp., "System study of coal mine communications," Final Rep. on Bureau of Mines Contract HO122076, July 1973 (NTIS PB 237-218/AS).

[8] National Academy of Engineering, "Mine rescue and survival," March 1970 (NTIS PB 191-691).

[9] a) National Bureau of Standards, "Survey report of the U.S. Bureau of Mines electromagnetic noise measurement program," Rep. on Bureau of Mines Contract HO210001, Nov. 1971 (NTIS PB 226-773/AS).
b) J. H. Crary, "Determination of the electromagnetic environment in coal mines," Rep. on Bureau of Mines Contract HO210001, Mar. 1972 (NTIS PB 213-204).
c) A. D. Little, Inc., "Electromagnetic and seismic noise and propagation, A Bibliography for U.S. Bureau of Mines". Rep. on Bureau of Mines Contract HO122026, Mar. 1972 (NTIS PB 217-500).
d) —, "Electromagnetic noise measurements, a field program and instrumentation system for electromagnetic noise measurements," Rep. on Bureau of Mines Contract HO122026, Apr. 1972 (NTIS PB 218-688/AS).
e) —, "Assessment of electromagnetic noise measurements taken by Bureau of Mines Contractors." Rep. on Bureau of Mines Contract HO122026, Jan. 1972 (NTIS PB 218-658/AS).
f) Colorado School of Mines, "Research on the transmission of EM signals between mine workings and the surface." Final Rep. of Bureau of Mines Contract HO122076, July 1973 (NTIS PB 237-852/AS).
g) National Bureau of Standards, "Time and amplitude statistics for EM in mines," June 1974 (COM 741 1450/AS).
h) —, "Electromagnetic noise in Robena No. 4 coal mine," Apr. 1974 (Cat No. C13.45:654).
i) —, "Surface magnetic field noise measurements in Geneva Mine," June 1974 (COM 741 1688/AS).
j) —"Electromagnetic noise in Grace Mine," June 1974 (COM 741 1687/AS).
k) —, "Electromagnetic noise in McElroy Mine," June 1974 (COM 741 1717/AS).
l) —, "Electromagnetic noise in Itmann Mine," June 1974 (COM 741 1719/AS).
m) —, "Electromagnetic noise in Lucky Friday Mine," Oct. 1974 (COM 751 0258).

[10] a) G. V. Keller and F. C. Frischknecht, *Electrical Methods in Geophysical Prospecting.* New York: Pergamon Press, 1970.
b) R. G. Geyer, Ed., Proc. *Through-the-Earth Electromagnetics Workshop* (Colorado School of Mines, Golden, CO, Aug. 15-17, 1973) (NTIS PB 213-154/AS).
c) A. D. Little, Inc., "Survey of electromagnetics and seismic noise related to mine rescue communications; Volume I—Emergency and operational communications," Final Rep. on Bureau of Mines Contract HO122026, pp. 2.1-2.85, Jan. 1974 (NTIS PB 235-079/AS).
d) J. R. Wait, "State of knowledge of analytical techniques for through-the-earth electromagnetic wave problems relevant to mine rescue" in *Proc. Through-the-Earth Electromagnetics Work-*

shop, pp. 9-14 (Colorado School of Mines, Golden, CO, Aug. 15-17, 1973) (NTIS PB 213-154/AS).
e) —, "Preliminary performance for EM through-the-earth mine communications," A. D. Little, Inc., Final Rep., Bureau of Mines Contract HO122026, Apr. 1972 (NTIS PB 217-502/AS).
[11] A. G. Emslie *et al.,* "Theory of propagation UHF radio waves in coal mine tunnels" in *Proc. Through-the-Earth Electromagnetics Workshop* (Colorado School of Mines, Golden, CO, Aug. 15-17, 1973) (NTIS PB 213-154/AS).
[12] A. E. Goddard, "Radio propagation measurements in coal mines at UHF and UVF," in *Proc. Through-the-Earth Electromagnetics Workshop,* pp. 54-61 (Colorado School of Mines, Golden, CO, Aug. 15-17, 1973) (NTIS PB 213-154/AS).
[13] S. F. Mahmoud and J. R. Wait, "Geometrical optional approach for electromagnetic wave propagation in rectangular mine tunnels," *Radio Sci.,* pp. 1147-1158, Dec. 1974.
[14] J. R. Wait, "Propagation under the earth surface (a review)," presented at Symp. on Electromagnetic Wave Theory, International Union of Radio Science, London, England, 1974.
[15] D. B. Large, L. Ball, and A. J. Farstad, "Radio transmission to and from underground coal mines—Theory and measurement," *IEEE Trans. Commun.,* vol. COM. 21, pp. 194-202, 1973.
[16] A. J. Farstad, "Performance on manpack electromagnetic location equipment in trapped miner location tests," *Proc. Through-the-Earth Electromagnetics Workshop,* pp. 62-72 (Colorado School of Mines, Golden, CO, Aug. 15-17, 1973) (NTIS PB 213-154/AS).
[17] R. G. Olsen and A. J. Farstad, "Electromagnetic direction finding experiments for location of trapped miners," *IEE Trans. Geosci. Electron.,* vol. GE-11, pp. 178-185, 1973.
[18] R. Gabillard, J. P. Dubus, and F. Cherpereel, "Electromagnetic survey method applicable to underground quarries," *in Proc. Through-the-Earth Electromagnetics Workshop,* pp. 121-129 (Colorado School of Mines, Golden, CO, Aug. 15-17, 1973) (NTIS PB 213-154/AS).
[19] a) J. R. Wait, "Criteria for locating an oscillating magnetic dipole buried in the earth," *Proc. IEEE,* vol. 59, pp. 1003-1035, June 1971.
b) —, "Electromagnetic induction technique for locating a buried source," *IEEE Trans. Geosci. Electron.,* vol. GE-9, pp. 95-98, 1971.
[20] J. R. Wait and K. P. Spies, "Low-frequency impedance of a circular loop over a conducting ground," *Electron. Letts.,* vol. 10, p. 248, 1974.
[21] —, "Electromagnetic fileds of a small loop buried in a stratified earth," *IEEE Trans. Antennas Propagat.,* vol. AP-19, pp. 717-718, Sept. 1971.
[22] J. R. Wait, "Locating an oscillating magnetic dipole in the earth," *Electron. Letts.,* vol. 8, no. 16, pp. 404-406, Aug. 10, 1972.
[23] A. J. Farstad, "Summary report of electromagnetic location techniques working group," *in Proc. Through-the-Earth Electromagnetics Workshop,* pp. 171-177 (Colorado School of Mines, Golden, CO, Aug. 15-17, 1973) (NTIS PB 213-154/AS).
[24] R. G. Geyer, "Theory and experiments relating to electromagnetic fields of buried sources with consequences to communication and location," *in Proc. Through-the-Earth Electromagnetics Workshop,* pp. 20-33 (Colorado School of Mines, Golden, CO, Aug. 15-17, 1973) (NTIS PB 213-154/AS.)
[25] Westinghouse Georesearch Lab., "Electromagnetic location experiments in a deep hardrock mine." Bureau of Mines Contract HO242006, Sept. 1973 (NTIS PB 232-880/AS).
[26] J. R. Wait and K. P. Spies, "Subsurface electromagnetic fields on line source on a conducting half-space," *Radio Sci.,* vol. 6, nos. 8-9, pp. 781-786, Aug.-Sept. 1971.
[27] J. R. Wait, "Array technique for electromagnetic positional determination of a buried receiving point," *Electron. Letts.,* vol. 7, no. 8, pp. 186-187, Apr. 22, 1971.
[28] J. R. Wait and K. P. Spies, "Subsurface electromagnetic fields of a line source on a two-layer earth," *Radio Sci.,* vol. 8, nos. 8-9, pp. 805-810, Aug.-Sept. 1973.
[29] J. R. Wait, "Influence of earth curvature on the subsurface electromagnetic fields of a line source," *Electron. Letts.,* vol. 7, no. 23, pp. 697-699, Nov. 18, 1971.
[30] J. R. Wait and R. E. Wilkerson, "The subsurface magnetic fields produced by a line current source on a nonflat earth," *Pure Appl. Geophys.,* no. 95, no. III, pp. 150-156, 1972.
[31] D. A. Hill and J. R. Wait, "Subsurface electromagnetic fields of a grounded cable of finite length," *Can. J. Phys.,* vol. 51, no. 14, pp. 1534-1540, 1973.
[32] —, "Subsurface electric fields of a grounded cable of finite length for both frequency and time domain," *Pure Appl. Geophys.,* vol. III, pp. 2324-2332, 1973/X.
[33] D. A. Hill, "Electromagnetic surface fields of an inclined buried cable of finite length," *J. Appl. Phys.,* vol. 44, no. 12, pp. 5275-5279, 1973.
[34] Westinghouse Electric Corp., "Trapped miner location and communication system development program," for the Bureau of mines under Contract HO220073, May 1973 (NTIS PB 235-604).
[35] J. R. Wait and D. A. Hill, "Transient signals from a buried magnetic dipole," *J. Appl. Phys.,* vol. 42, no. 10, pp. 3866-3869, Sept. 1971.
[36] —, "Transient magnetic fields produced by a step-function-excited loop buried in the earth," *Electron. Letts.,* vol. 8, no. 11, pp. 294-295, June 1, 1975.
[37] —, "Electromagnetic surface fields produced by a pulse-excited loop buried in the earth," *J. Appl. Phys.,* vol. 43, no. 10, pp. 3988-3991, Oct. 1972.
[38] D. A. Hill and J. R. Wait, "Electromagnetic surface fields produced by a pulse excited loop buried in the earth," *J. Appl. Phys.,* vol. 43, no. 10, pp. 3988-3991, Oct. 1972.
[39] J. R. Wait and D. A. Hill, "Transient electromagnetic fields of a finite circular loop in the presence of a conducting half-space," *J. Appl. Phys.,* vol. 43, no. 11, pp. 4532-4534, Nov. 1972.
[40] D. A. Hill, "Transient signals from a buried horizontal magnetic dipole," *Pure Appl. Geophys.,* vol. III, pp. 2264-2272, 1973/X.
[41] D. A. Hill and J. R. Wait, "Diffusion of electromagnetic pulses into earth from a line source," *IEEE Trans. Antennas Propagat.,* vo. AP-22,
vol. AP-22, pp. 145-146, Jan. 1974.
[42] J. R. Wait, "The effect of a buried conductor on the subsurface fields for line source excitation," *Radio Sci.,* vol. 7, no. 5, 587-591, 1972.
[43] A. G. Howard, Jr., "The electromagnetic fields of a subterranean cylindrical inhomogeneity excited by a line source," *Geophys.,* vol. 37, no. 6, pp. 6975-984, 1972.
[44] C. H. Stoyer, "Numerical solutions of the response of a two-dimensional earth to an oscillating magnetic dipole source with application to a groundwater field study," Ph. D. dissertation, Dep. Geosciences, Pennsylvania State University, 1974.
[45] D. A. Hill and J. R. Wait, "Perturbation of magnetic dipole field by a finitely conducting circular cylinder," *Rivista Italiana di Geofisica,* vol. XXII, no. 5/6, pp. 421-424, 1973.
[46] A. Q. Howard, Jr., "Fields of a magnetic dipole excited buried cylinder," in *Proc. Through-the-Earth Electromagnetics Workshop,* pp. 73-80 (Golden, CO, Aug. 15-17, 1973) (NTIS PB 213-154/AS).
[47] J. R. Wait and D. A. Hill, "Excitation of a homogeneous conductive cylinder of finite length by a prescribed axial current distribution," *Radio Sci.,* vol. 8, no. 12, pp. 1169-1176, Dec. 1973.
[48] D. A. Hill and J. R. Wait, "Electromagnetic response of a conducting cylinder of finite length," *Geofis. Int.,* vol. XII, no. 4, pp. 245-266, 1973.
[49] —, "The electromagnetic response of a buried sphere for buried dipole excitation," *Radio Sci.,* vol. 8, nos. 8-9, pp. 813-818, Aug.-Sept. 1973.
[50] D. A. Hill, "Effect of a spherical scatterer on EM source location," Preliminary Rep., Bureau of Mines Contract HO122061, 1974.
[51] D. A. Hill and J. R. Wait, "Perturbation of magnetic dipole fields by a perfectly conducting prolate spheroid," *Radio Sci.,* vol. 9, no. 1, pp. 71-73, Jan. 1974.
[52] P. Delogne, "The INIEX mine communications systems," in *Proc. Int. Conf., Radio: Roads, Tunnels and Mines, Vol. 2—Mines* (Liege, Belgium), pp. 129-136, Apr. 1974.
[53] D. Martin and R. Webster, "The use of radio in British coal mines," *Proc. Int. Conf. Radio: Roads, Tunnels, and Mines. Vol. 2—Mines* (Liege, Belgium), pp. 110-128, Apr. 1974.
[54] *Proc. Colloquium on Leady Feeder Radio Communication Systems* (Univ. Surrey, Surrey, England), 262 pp., Apr. 1974.
[55] INIEX—Belgium, in *Proc. Int. Conf. Radio: Roads, Tunnels and Mines. Vol. I—Roads and Tunnels,* 233 pp., Vol. II—Mines, 185 pp., Apr. 1974.
[56] D. J. R. Martin, "A general study of the leaky feeder principle." *Radio Electron. Eng.,* vol. 45, pp. 206-214, May 1975.
[57] P. Delogne, "Basic mechanisms of tunnel propagation," *Radio Sci.,* vol. 11, no. 4. pp. 295-303, Apr. 1976.
[58] J. R. Wait and D. A. Hill, "Guided electromagnetic waves along an axial conductor in a circular tunnel," *IEEE Trans. Antennas Propagat.,* vol. AP-22, July 1974.
[59] R. Cougouille *et al.,* "Radio transmission of speech in the French coal mines," Preliminary Rep., Bureau of Mines Contract HO122061, 1974.
[60] P. Delogne *et al.,* "Guided propagation of radio waves," in *Proc. "Through-the-Earth Electromagnetics Workshop,"* pp. 49-52, (Colorado School of Mines Golden, CO, Aug. 15-17, 1973) (NTIS PB 213-154/AS).
[61] L. Deryck, "Mines et carrières," *Bulletin Technique,* no. 134 Inst. National Des Industries Extractives, Liege, Belgium, 1971.
[62] D. A. Hill and J. R. Wait, "Gap excitation of an axial conductor in a circular tunnel," *J. Appl. Phys.,* vol. 45, no. 11, pp. 4774-4777, Nov. 1974.
[63] D. A. Hill and J. R. Wait, "Excitation of monofilar and bifilar

conductor modes on a transmission line in a circular tunnel," *Appl. Phys.*, vol. 45, no. 8, pp. 3402–3406, Aug. 1974.

[64] D. J. R. Martin, "Transferred surface currents in braided coaxial cables," *Electron Letts.*, vol. 18, no. 18, pp. 465–466, Sept. 1972.

[65] J. Fontaine *et al.*, "Feasibility of a radio communication in mine galleries by means of a coaxial cable having a high coupling impedance," in *Proc. "Through-the-Earth Electromagnetics Workshop,"* pp. 130–139 (Colorado School of Mines, Golden, CO, Aug. 15–17, 1973) (NTIS PB 213–154/AS).

[66] R. W. Jones, "Performance of slotted cables for radio communication in mines," in *Proc. Colloquium on Leaky Feeder Radio Communication Syst.* (Univ. of Surrey, Surrey, England), pp. 171–182, Apr. 1974.

[67] R. Lagace *et al.*, "Leaky coaxial cable for guided wireless communications systems," Final Rep. of Bureau of Mines Contract HO122026, pp. 3.1–3.24, Jan. 1974 (NTIS PB 235-079/AS).

[68] J. R. Wait and D. A. Hill, "Electromagnetic fields of a dielectric coated coaxial cable with an interrupted shield," U.S. Office of Telecommunications, Tech. Memo. 75–192, p. 51, June 1975.

[69] S. F. Mahmoud and J. R. Wait, "Theory of wave propagation along a thin wire inside a rectangular waveguide," *Radio Sci.*, vol. 9, no. 3, pp. 417–420, Mar. 1974.

[70] D. J. Cree, "Railway radio communication using radiating coaxial cable," in *Proc. Int. Conf., "Radio: Roads, Tunnels and Mines." Vol. 2–Mines* (Liege, Belgium), pp. 187–199, Apr. 1974.

[71] D. J. R. Martin, "Underground communications–The new role of radio," *Colliery Guardian Annual Review 1974*, pp. 99–106, 1975.

[72] Staff–Mining Research, "Mine communications," in *Proc. Bureau of Mines Technology Transfer Seminar* (Bruceton, PA, Mar. 21–22, 1973; Bureau of Mines Information Circular 8635, 86 pp, 1974.

[73] R. Chufo *et al.*, "The installation, operation and maintenance of an underground mine-wide radio system," *IAS Annual 1976*, pp. 1196–1202, 1976.

[74] J. Murphy *et al.*, "Mine communications: Research and development in the USA," in *Proc. Int. Conf. "Radio: Roads, Tunnels and Mines." Vol. 2–Mines* (Liege, Belgium) pp. 42–64, Apr. 1974.

[75] West Virginia Univ., "Mine communications and monitoring–Volume I, General monitoring system design and experimental results," Final Rep. of Bureau of Mines Grant GO101702, Oct. 1974 (NTIS PB 244–330/AS).

[76] G. H. Schnakenberg, "Bureau of Mines gas detection sensor research," in *Proc. 2nd WVU Conf. in Coal Mine Electrotechnol.*, pp. 19-1/19-13, June 12–14, 1974 (NTIS PB 244-453/As).

[77] a) Westinghouse Electric Co., "Detection and location of entrapped miners by seismic means: Methods and computer programs," Vol II, Final Rep., Bureau of Mines Contract HO220073, May 1973 (NTIS PB 235-606/AS).
b) Continental Oil Co., "Seismic linear detection and location system," Phase I Final Rep. Sept. 1973 (NTIS PB 231-154/AS).
c) J. A. Powell *et al.*, "Seismic detection of trapped miners using in-mine geophones," Bureau of Mines Rep. of Investigations 8158, 8 pp., 1976.
d) J. H. Kravitz. "Mine emergency operations–surface rescue support," *Proc. 6th Annu. Inst. Coal Mining Health, Safety, and Research* (Virginia Polytechnic Institute and State University, Blacksburg, VA) pp. 203–210, Aug. 26–28, 1975.

[78] a) Westinghouse Electric Corp., "Coal mine rescue and survival: Communications/location subsystem," vol. 2, Final Rep., Bureau of Mines Contract HO101262, Sept. 1971. (NTIS PB 208–267).
b) —, "EM locating system prototype and communication station modification," Final Rep. Bureau of Mines Contract HO232049, July 1973 (NTIS PB 226-600/AS).
c) —, "Electromagnetic location experiments in a deep hard-rock mine," Final Rep., Bureau of Mines Contract HO232006, Sept. 1973 (NTIS PB 232-880/AS).
d) J. A. Powell, "An electromagnetic system for detecting trapped miners," BuMines Rep. of Investigations 8159, 15 pp., 1976.

[79] Collins Radio Co., "Waveform generator for EM location of trapped miners," Final Rep. Bureau of Mines Contract HO133045, July 1972 (NTIS PB 240-481/AS).

[80] R. Wolf, "Design of equipment for intrinsic safety," in *Proc. 1st WVU Conf. Coal Mine Electrotechnology*, pp. V-1/V-11, Aug. 2–4, 1972 (NTIS PB 218–464).

[81] D. J. Vermeulen *et al.*, "Underground radio communications and its application for use in mine emergencies," *Trans. S. A. Inst. Elec. Eng.*, pp. 94–106, Apr. 1961.

[82] H. Dushac, "Improved communication systems for use in underground coal mines," in *Proc. 2nd WVU Conf. Coal Mine Electrotechnology*, pp. 10-1/10-14, June 12–14, 1974, (NTIS PB 244-453/AS).

[83] W. Langner, "The Bergbau-Forschung GmbH underground radiotelephone system design and applications," in *Proc. Int. Conf. "Radio: Roads, Tunnels and Mines." Vol. 2–Mines* (Liege, Belgium) pp. 65–77, Apr. 1974.

[84] C. D. Herns, "Practical experience gained with S.E.L. and Funke and Hunter radio systems for locomotives," in *Proc. Int. Conf. "Radio: Roads, Tunnels and Mines." Vol. 2.–Mines* (Liege, Belgium), pp. 100–109, Apr. 1974.

[85] R. Liegeois, "Communications par radio dans les tunnels," in *Proc. Int. Conf., "Radio: Roads, Tunnels and Mines." Vol. 2–Mines* (Liege, Belgium), pp. 200–211, Apr. 1974.

[86] Arthur D. Little, Inc., "Propagation of radio waves in coal mines," Rep., Oct. 1975.

[87] a) A. B. Ray *et al.*, "AEP puts new telephone systems to work underground," *Coal Age*, Mar. 1975.
b) R. E. Fizer, "New communications center for Ohio Valley division," *in Proc.*
vision," in *Proc. 2nd WVU Conf. in Coal Mine Electrotechnology*, pp. 6-1/6-4, June 12–14, 1974 (NITS PB 244-453/AS).
c) J. Beard, "New intrinsically safe telephone," *Mining Technology*, vol. 55, no. 636, pp. 436–438, Oct. 1973.

[88] N. Chironis, "Super communication system designed to enhance control of operations at Robena Mine," *Coal Age*, June 1976.

[89] J. D. Combellick, "A whole mine communications systems," in *Proc. 2nd WVU Conf. in Coal Mine Electrotechnology*, pp. 7-1/7-6, June 12–14, 1974 (NTIS PB 244-253/AS).
a) M. D. Aldridge, "Conclusions from the WVU monitoring experiments," in *Proc. 2nd WVU Conf. in Coal Mine Electrotechnology*, pp. 18-1/18-14, June 12–14, 1974 (NTIS PB 244-253/AS).
b) M. C. Irani, "A continuous recording methanometer for exhaust fan monitoring," in *Proc. 2nd WVU Conf. in Coal Mine Electrotechnology*, pp. 15-1/15-16, June 12–14, 1974 (NTIS PB 244-253/AS).

[90] M. L. Bowser, "An overview of mine monitoring research at the Bureau of Mines," in *Proc. 2nd WVU Conf. in Coal Mine Electrotechnology*, pp. 14-1/14-4, June 12–14, 1974 (NTIS PB 244-253/AS).

[91] A. D. Little, Inc., "Investigation of communication standards as related to coal mines," Final Rep. Bureau of Mines Contract HO133038, Sept. 1973 (NTIS PB 240-552/AS).

[92] "Radio frequency energy, a potential hazard in the use of electric blasting caps," Publ. No. 20, Institute of Makers of Explosives, New York, NY.

[93] Franklin Institute Res. Labs, "Evaluation and determination of sensitivity and electromagnetic interaction of commercial blasting caps," Final Rep., Bureau of Mines Contract HO210068, Aug. 1973 (NTIS PB 236-119/AS).

[94] G. C. Lindsay, "Remote control mining comes of age," *Coal Mining and Processing*, p. 30, Sept. 1973.

[95] B. Cauli *et al.*, "Remote control by radio in French collieries: Apparatus and results obtained," in *Proc. Int. Conf. "Radio: Roads, Tunnels and Mines." Vol. 2–Mines* (Liege, Belgium) pp. 161–182, Apr. 1974.