IC 9309

BUREAU OF MINES
INFORMATION CIRCULAR/1992

Research Toward Direct Analysis of Quartz Dust on Filters Using FTIR Spectroscopy

By Donald P. Tuchman

UNITED STATES DEPARTMENT OF THE INTERIOR

Information Circular 9309

Research Toward Direct Analysis of Quartz Dust on Filters Using FTIR Spectroscopy

By Donald P. Tuchman

UNITED STATES DEPARTMENT OF THE INTERIOR
Manuel Lujan, Jr., Secretary

BUREAU OF MINES
T S Ary, Director

Library of Congress Cataloging in Publication Data:

Tuchman, D. P. (Donald P.)
Research toward direct analysis of quartz dust on filters using FTIR spectroscopy / by D.P. Tuchman.

p. cm. — (Information circular / Bureau of Mines; 9309)

Includes bibliographical references (p. 16).

Supt. of Docs. no.: I 28.27:9309.

1. Quartz dust—Analysis. 2. Fourier transform infrared spectroscopy. 3. Air filters. I. Title. II. Series: Information circular (United States. Bureau of Mines); 9309.

TN295.U4 [TN312] 622 s—dc20 [622'.83] 90-19576 CIP

CONTENTS

ILLUSTRATIONS

TABLES

UNIT OF MEASURE ABBREVIATIONS USED IN THIS REPORT

cm	centimeter	μg	microgram
cm^{-1}	centimeter reciprocal (wavenumber)	min	minute
in	inch	mm	millimeter
mg	milligram	μm	micrometer

RESEARCH TOWARD DIRECT ANALYSIS OF QUARTZ DUST ON FILTERS USING FTIR SPECTROSCOPY

By Donald P. Tuchman[1]

ABSTRACT

The U.S. Bureau of Mines is investigating Fourier transform infrared (FTIR) spectroscopy for on-filter quartz analysis of respirable dust. A custom accessory is described for full-face examination of filters utilizing a large-diameter infrared (IR) beam. The accessory positions samples to match diameters with that of the diverging analytical beam. Sample absorbance is then measured. With nonuniform deposition of dust on collection filters being a major issue for such analyses, this approach is the most direct way to accomplish sample area averaging. The approach is unconventional since it utilizes large-beam geometries instead of the usually desired minimized beam dimensions. The issues and problems involved in the analysis of quartz on a filter matrix are discussed. Absorption bands chosen, light-scattering effects, curved baselines, random noise, interference fringes, and possible solutions to technical difficulties are the topics covered. The more significant findings include a 20-μg detection limit for quartz when the custom accessory is used and minimal occurrence of light-scattering effects at low wavenumbers. The custom accessory performance was satisfactory and merits further work. With continued research, an on-filter method for quartz analysis of respirable dusts seems achievable.

[1]Research industrial hygienist, Pittsburgh Research Center, U.S. Bureau of Mines, Pittsburgh, PA.

INTRODUCTION

Silicosis is one of the best known of the occupationally related pneumoconioses. Despite the many years of work that have gone into its investigation and control, the disease remains a genuine concern for America's mining work force. Public health organizations specifically name silicosis as one of the major occupational diseases that require more attention (*1*).[2] The National Coal Workers Autopsy Study records silicosis lesions among 12% of U.S. miners (*2-3*). Coal miners are still receiving significant doses of silica dust in their work environment. The present 12% prevalence level can be reduced, but improved laboratory techniques must parallel all the administrative, research, and enforcement efforts to do so. Improving the method by which quartz in respirable dust is measured is inherent for the health and enforcement community to pursue improved epidemiology, detail dose-response relationships, clarify low-exposure situations, and verify control technology. Increased speed of analysis and a low detection limit would be very helpful for the progress of such work.

Recent U.S. Mine Safety and Health Administration (MSHA) data indicate that airborne quartz levels in mines are higher than thought in previous years (*3*). Increasing numbers of mines now face more stringent dust standards as quartz levels exceeding 5% are detected (*4*). Improvements achieved with the current analytical methodology for quartz have helped the mining community to accurately recognize the presence and degree of health risk. They have also helped to appropriately assign more stringent dust standards to specific mines that need them.

The foundational method for determining quartz content in respirable coal mine dust is based on dispersive IR spectroscopy (*5-6*). The method has a working range of measuring 25 to 250 μg of quartz with a precision of 13% to 22%. This multistep analysis has been adequate for many years, comparing favorably with X-ray methods. However, dispersive IR methodologies had limitations (*5-7*), such as exacting sample preparation requirements and few options to cope with interfering substances. These factors could be ameliorated by use of more current instrumentation, that is, FTIR. This newer class of instrument has improved the precision of the longstanding methodology (*8*). Although there has been an upgrade in instrumentation, the existing technique for analyzing dust samples for quartz continues to have much potential for improvement. It remains quite labor intensive and time consuming, still involving the use of low-temperature ashing, sample filtration, and redeposition before actual IR analysis. A substantial portion of dust samples collected at coal mines must be discarded rather than analyzed because current techniques are too inconvenient to evaluate low-mass samples. Research into on-filter analysis of samples will attempt to resolve these ongoing issues.

In the classical dispersive instrument, radiation from the source passes through the sample and is dispersed by some optical element, usually a diffraction grating. The beam then proceeds through a slit mechanism that ensures that the radiation reaching the detector is a narrow band of frequencies. Slit controls are used to determine wavelength resolution. A more recent development is the FTIR spectrometer. The core of an FTIR is a Michelson interferometer, which consists of a beam splitter, a fixed mirror, and an oscillating mirror. Collimated radiation from the source impinges on the beam splitter, which equally divides the beam, directing half to the fixed mirror and the other half to the oscillating mirror. After reflecting off the mirrors, the beams recombine at the beam splitter where spectral interferences occur. The resultant beam passes through the sample and onto the detector. Wavelength resolution is determined by the maximum range of motion of the oscillating mirror, accurately measured by laser techniques.

FTIR spectrometers are a substantial advancement over dispersive IR instruments, especially when accompanied by specialized data processing and control electronics. Data manipulation routines provide for great versatility. Furthermore, an FTIR does not have a monochromating device that limits energy intensity of the IR beam. The high-energy throughput of FTIR, that is, the undiminished level of IR radiation that actually passes through samples, often achieves much lower detection limits. Wavelength resolution is also greatly improved. High scanning rates permit rapid sample processing, and coadding scans reduce random noise in collected spectra. These features are significant technical advances in the collection and analysis of IR spectra. As a result, FTIR spectrometers are rapidly replacing aging dispersive hardware. A sound base of information has been accumulated on principles and performance of FTIR instruments (*9-11*).

Determining quartz without multistep preparation of the original collection filter has been a goal for analytical chemists for a long time (*12-13*). The terms "direct analysis" and "on-filter analysis" as used in this report, refer to the ideal situation of being able to analyze material deposited on a filter with minimal or no sample preparation.

[2]Italic numbers in parentheses refer to items in the list of references preceding the appendix at the end of this report.

Achieving true on-filter analysis would provide the analyst with many benefits. These benefits would include speed, convenience, and productivity. If analysis time was shortened, the analyst would be able to process more samples per laboratory workday, without increased cost or work staff. The result might be a better characterization of the work environment and better avoidance of health risks to the miners. With the advent of inexpensive FTIR instrumentation accompanied by sophisticated data processing, the goal of on-filter analysis may be within reach.

This research with on-filter analysis reflects the U.S. Bureau of Mines goals in service to the mining community, protecting worker health from respiratory disease and efficiency in evaluating the mine environment.

APPARATUS AND MATERIALS

The FTIR spectrometer used in this investigation was a Digilab[3] model FTS-40 (Bio-Rad, Digilab Div.) equipped with a dry-air purge accessory. The interferometer has an air-bearing design, allowing spectral resolution as fine as 0.5 cm^{-1}, if desired. This instrument was equipped for the mid-IR range (400 to 4,400 cm^{-1}) with a deuterated triglycine sulfate detector. The source was cooled with a circulating constant-temperature water bath. Although polyvinyl chloride (PVC) filters were considered, calibration samples were prepared using PVC-acrylic copolymer membrane filters and Min-U-Sil 5 (U.S. Silica Co.) standard quartz dust. Samples with small-area dust deposits (7.5-mm diameter) were mounted in a standard magnetic film holder. Samples with full-face dust deposits (33-mm diameter) were mounted in a customized accessory, which is discussed in detail in this report. The sizes of the dust deposits were appropriate for the specific experiments conducted. Other analysts with different instruments and hardware may choose other size deposits.

Min-U-Sil 5 quartz dust (pure quartz particulates, 5 μm or smaller) is well accepted as a standard for IR analysis of quartz dusts (*5, 14*). There are, however, some special considerations that should be kept in mind in the choice of any quartz standard that have significant industrial hygiene implications. It is well known that mineral samples must be finely ground to produce accurate IR spectra. The absorption strength of IR bands of mineral dusts, including quartz dusts, is dependent on the particle size distribution of the sample. Generally, the finer the dusts, the stronger the absorbance bands. The relative strengths of the absorbance bands also change with particle size distribution. Quartz produces maximum absorbances when its particles are 1 to 3 μm in diameter. Particles larger than this do not produce optimum absorbance. Below this size range, an amorphous silica layer commonly found on crystalline quartz dust may also diminish absorbance. The amorphous surface seems to be a constant 0.03-μm-thick outer layer that is a part of all sizes of particles. Therefore, for very small particles, the amorphous layer constitutes a significant portion of the particle mass. The surface layer mentioned is particularly interesting in that the most recent research into quartz toxicity implicates surface chemistry of the particles. Min-U-Sil 5 quartz dust is one of the better practical quartz standards available, generally matching particle size distributions collected with personal sampling apparatus. However, the particle size distribution of any individual field sample, its surface or spectroscopic properties, and therefore its toxicological evaluation, may not match Min-U-Sil 5 quartz dust or any commercially available material.

NATURE OF MINE DUST SAMPLES

The dust samples of interest are collected on polymer membrane filters. Very few sampling devices, however, deposit dust uniformly on filters. While some sampling cassettes achieve fairly uniform dust deposition (*15-16*), cassettes commonly used at mine sites do not. The 37-mm sampling cassettes used for compliance purposes under the Federal Coal Mine Health and Safety Act are the strong convention for all minesite sampling. Density of dust deposited on typical collection filters can vary strongly with position on the filter. The masses of dust at two small localized positions on the same filter can vary greatly, sometimes by a factor of 2 or 3, and in some cases by a greater factor (*16-18*). Figure 1 shows some filter samples from mine sites. They represent challenging, but not uncommon, mine dust samples. Usual personal sampling apparatus (10-mm nylon cyclone assembly, 37-mm preweighed filter cassette, and battery-operated portable air pump) were used to collect these samples. Highly nonuniform dust deposition is evident in the samples. Figure 1 includes some filters with patterned dark and light spotted grids. These patterns are likely the result of the perforated support membrane backing the 5-μm PVC filter. Blotches, streaks, and irregular deposition might occur

[3]Reference to specific products does not imply endorsement by the U.S. Bureau of Mines.

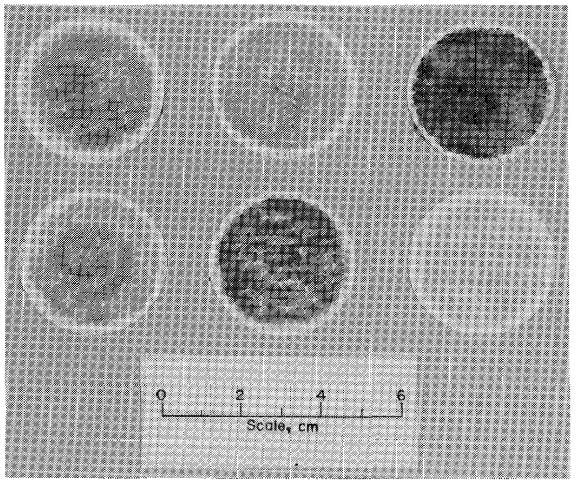

Figure 1.—Examples of filter samples collected at coal mines.

because of nonuniform airflow through different parts of the filter. Variation in filter texture, thickness, and pore size may contribute to these flow differences. Sometimes, heavier deposition occurs at the center of a filter. Somewhat like in an impactor, relatively fast airflow at the center of the cassette tends to concentrate dust deposition at the center of the filter.

Nonuniform deposition is the first and primary technical hurdle to overcome in achieving on-filter analysis. Using cassettes that are designed to collect dust evenly on filter surfaces could eliminate nonuniform deposition. Some 25-mm cassettes are known to collect dusts with good uniformity. Furthermore, since the area of collection would be reduced in comparison to 37-mm cassettes, the more concentrated sample would increase sensitivity. Additionally, smaller beam geometries are generally more advantageous, as discussed in the "Detection Limits and Sensitivity" section. Practical implications of converting all sampling devices used in the mining industry, however, led to the pursuit of on-filter analysis with samples as they now exist: nonuniform, highly variable, and 37 mm in diameter. No simple correction factor or mathematical modeling can deal with the nonuniform deposition of dust on collection filters because each filter sample is unique.

PURPOSE AND DESCRIPTION OF CUSTOM FILTER HOLDER

An alternative to requiring inherently uniform deposits is to attempt to average the analysis over the whole filter area. Several averaging techniques are possible options. Spinning the sample in the IR beam might accomplish area averaging, but would introduce new problems. The filter-spinning device would increase both vibrational and spectral noise in the spectrometer. Furthermore, harmonic interaction between the rhythm of the FTIR oscillating mirror and sample spinner might occur. An alternate technique would involve taking several spectra from different sections of the sample and then averaging the results. This technique, however, would increase sampling time and further complicate the analytical procedure. Furthermore, examining a filter in a reproducible manner would require marking or cutting it. This approach makes double-checking the analysis of a filter difficult. One alternative, however, has considerable potential. Matching the instrument beam diameter to the sample diameter would achieve area averaging. This approach requires some means of placing a 37-mm filter sample in the diverging IR beam where the beam diameter is also nearly 37 mm and then achieving a match between the beam and dust deposit diameters. A custom-designed filter holder was fabricated for that specific purpose.

This approach is optically simple to engineer, but very unconventional. In spectrometer design, it is almost always preferable to place a small, compact sample in the path of a narrow, high-intensity analytical beam. This is because the analytical sensitivity of the measurements is inversely proportional to the cross-sectional area of the analytical beam used (the general beam geometry). In a series of samples containing identical masses of an analyte, the physically smallest sample that can be analyzed with the narrowest beam will show the highest absorbance reading. By analyzing large-area samples with a wide-diameter analytical beam, the problem of nonuniform deposition is solved and the speed and convenience of on-filter analysis may be gained. An initial compromise in sensitivity, however, must be accepted during this early phase of the research. Questions to resolve are whether the analytical sensitivity is still adequate and whether this approach is viable enough to merit further research on its improvement. If the analytical sensitivity experienced is comparable to dispersive instruments, despite the optical modifications to the FTIR, the viability of the approach will be demonstrated. Also of significance is the availability of research options that may later improve sensitivity.

As seen in figure 1, respirable dust samples from mines cover the full face of the 37-mm-diameter filter, except for a narrow 2-mm band around the edge where sampling cassettes form a seal. Full-face IR examination of the filter is required to average over the nonuniform deposit. Areas of mild coloration on a filter indicate areas of light dust deposit (low mass per unit area) or lightly colored dusts. Quartz and other minerals may be pale colored and may be present on pale portions of any filter.

Figure 2 shows a fairly typical FTIR beam geometry. The beam converges to the focus as it enters the sample compartment and diverges from the focus as it exits toward the IR detector. By moving the sample filter toward or away from the focus, the beam diameter can be matched to the diameter of the deposit on the filter. Generally, matching the diameter of the IR beam to that of the dust deposition on the filter is preferred, achieving a ratio of approximately 1.0. Placing the filter in the appropriate position on the detector side of the beam focus will allow for maximized recovery of light scattered by the sample. The particular dimensions of an FTIR's sample compartment, as well as its beam geometry and energy throughput, will vary from manufacturer to manufacturer. Although these may be limiting factors, the beam-matching technique should be achievable with many FTIR instruments.

The beam-matching accessory was designed to be as versatile as possible. Figure 2 shows intended positions for mounting standard 37-mm, 25-mm, and 13-mm-diameter filters. All research to date has been with the 37-mm position because it is the size filter used to collect dust samples from mines. The custom filter holder cannot accommodate 47-mm-diameter filters. The position corresponding to a 47-mm beam diameter would be too close to the exit of the sample compartment to engineer this option.

Figure 2 also shows the fixed position baseplate of the custom filter holder. The bottom of the baseplate has metal pins to mount the filter holder in a precise optical alignment with the IR beam in the sample compartment. Every FTIR spectrometer's sample compartment is actually a portion of the instrument's optical bench. The baseplate and its pins ensure precise and reproducible alignment in the optical bench scheme. A pair of vertical mounting brackets for each filter size ensures proper alignment of the filters. The mounting brackets do not intercept the diverging IR beam. The beam is free to diverge throughout the whole accessory. Only when a particular filter and its mounting apparatus are fully assembled and inserted in place will interception of the IR beam occur.

Figure 3 shows an exploded view of a typical filter mounting assembly with full perspective and features. Figures 4 through 6 further illustrate the FTIR filter holder. Figure 4 shows the filter holder accessory from a rear view with full detail, including the IR beam of the FTIR spectrometer. The circular crosssections of the beam match the mounting positions and diameters of dust deposits on filters. For 37-mm filters, the dust deposit is 33 mm in diameter. For 25-mm filters, the dust deposit is 21 mm in diameter. For 13-mm filters, the dust deposit is 9 mm in diameter. At each filter mounting position, the IR beam is a few millimeters larger than needed to cover the dust deposit. When a filter is mounted in the custom holder, the outer fringe of the beam is intercepted so that there is an adequate match between the penetrating beam

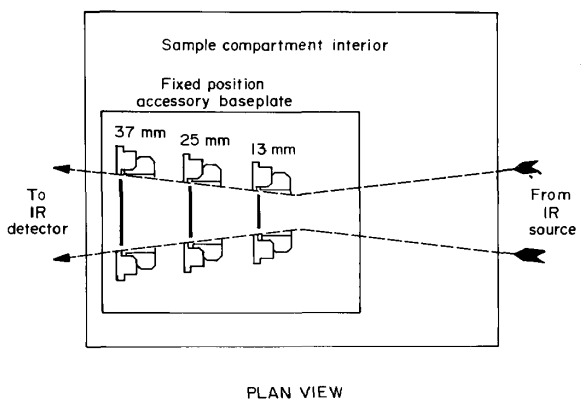

Figure 2.—Conceptual detail of custom accessory fully assembled and mounted in instrument sample compartment.

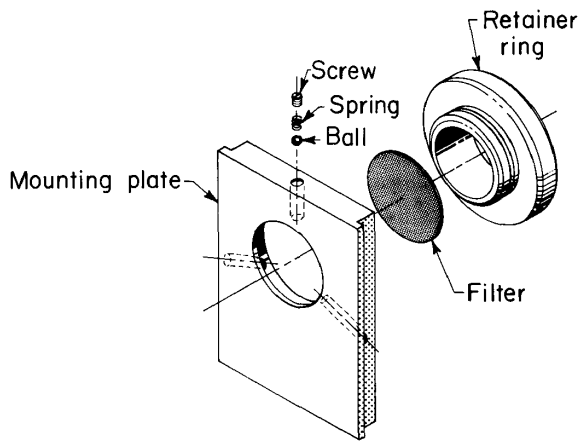

Figure 3.—Exploded view of typical filter mounting assembly.

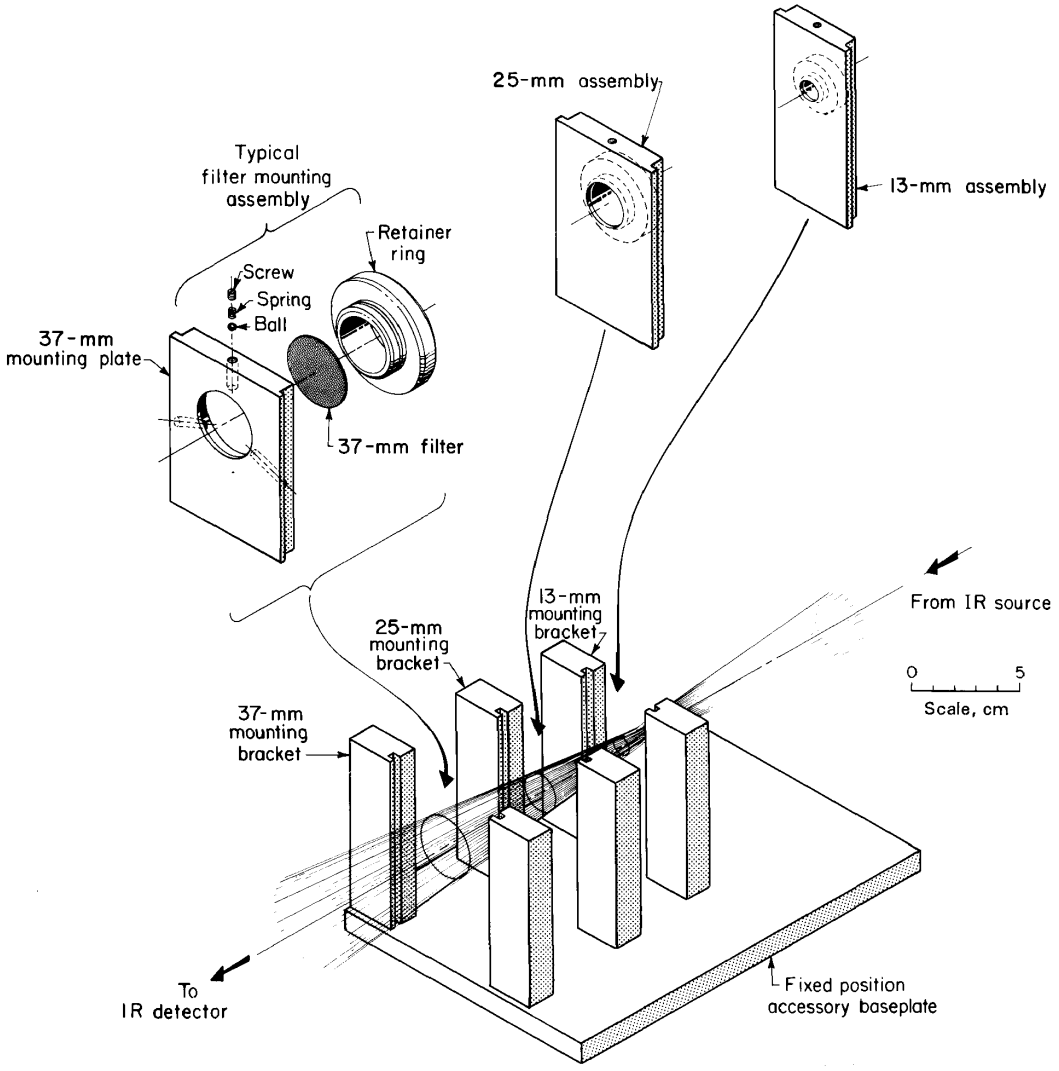

Figure 4.—Detailed construction plan for custom accessory, with rear view showing IR beam.

and the dust deposit diameter. Considerable cooperation between the instrument manufacturer and the accessory fabricator is needed to devise a successful geometry for such an accessory.

The widths of the three mounting plates and the corresponding widths of the three mounting brackets are significantly different. Each mounting plate can fit in only one mounting bracket, making it impossible to place a mounting plate in a wrong position or mismatch the beam diameter to the filter diameter. Only the 37-mm mounting plate is in place for research recorded in this report. The accessory is constructed of aluminum that has been anodized black. Figure 5 shows the manual mounting of a 37-mm filter in its mounting plate. Experience bears out that many filters are up to 0.8 mm larger than nominally stated size. To prevent filters from warping or puckering during mounting, machined recesses in mounting plates must be slightly larger than the filter diameters declared by the manufacturers. Figure 6 shows manual insertion of the 37-mm mounting plate into its bracket. Use of the custom filter holder requires little hand work and no particular skill.

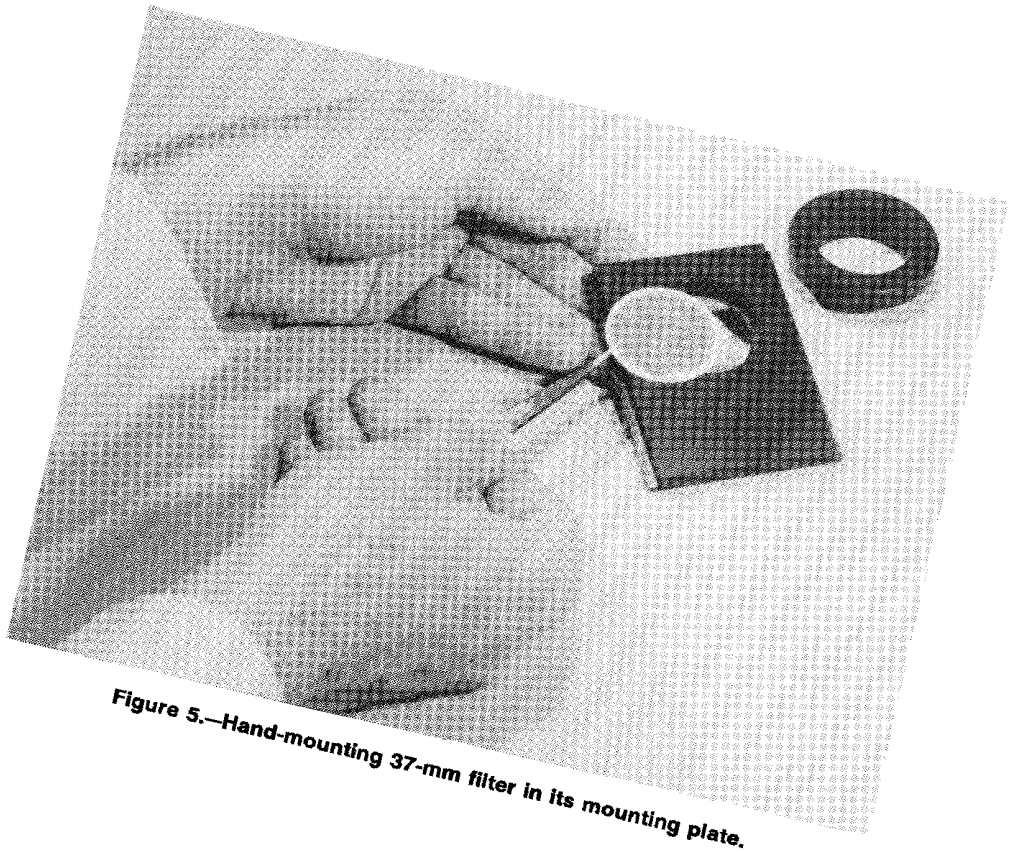

Figure 5.—Hand-mounting 37-mm filter in its mounting plate.

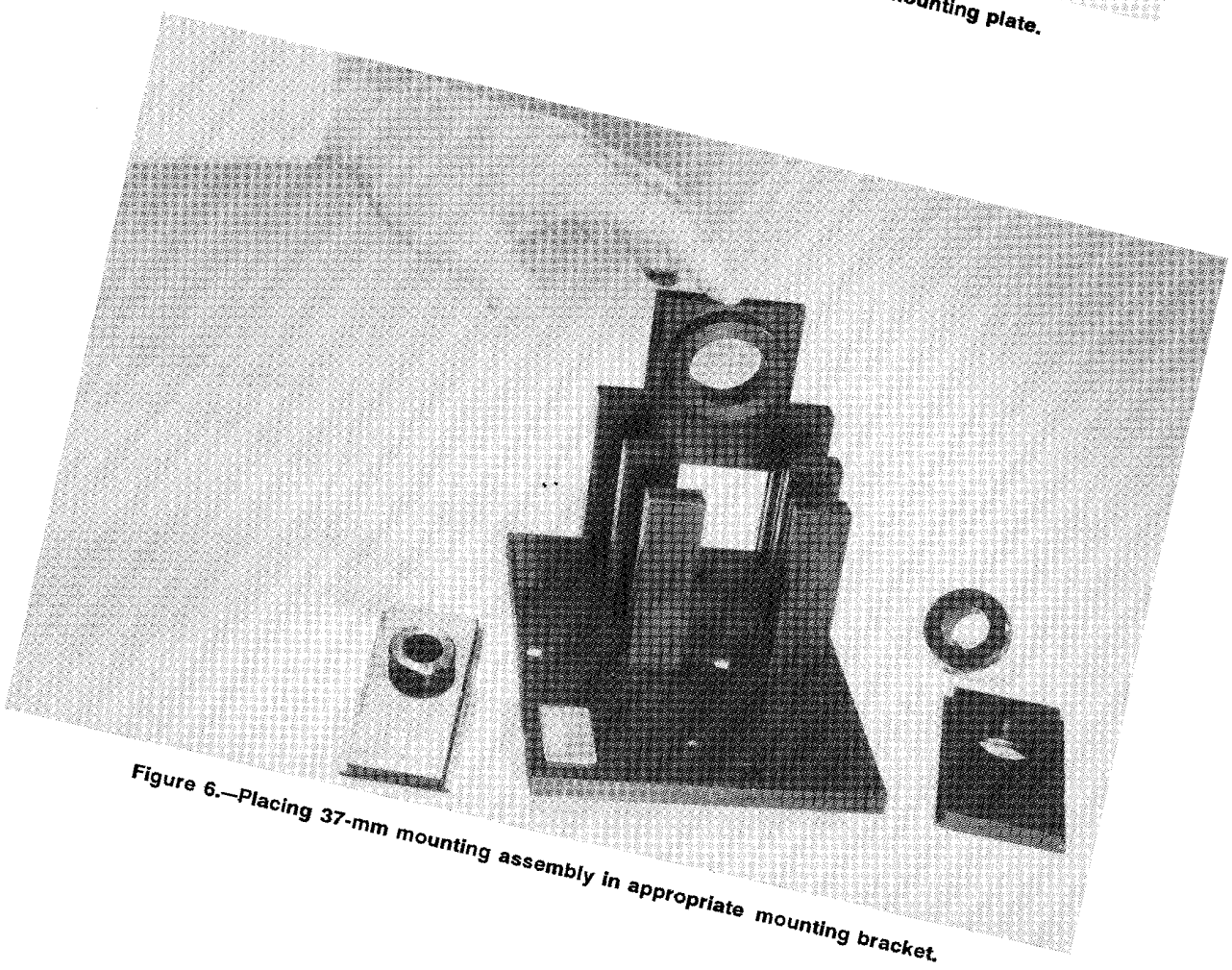

Figure 6.—Placing 37-mm mounting assembly in appropriate mounting bracket.

SAMPLE PREPARATION AND ANALYSIS

FILTERS

PVC-acrylic filters were used for all test samples used during this research. Both PVC and PVC-acrylic filters are good candidates for on-filter analysis. Pure PVC filters, being hydrophobic, can achieve maximum weight stability and are little affected by ambient relative humidity. PVC-acrylic filters, on the other hand, offer better IR transparency. Although a fair amount of commentary has been written (*18-22*), no definitive advantage of one filter composition over the other surfaced during the review of literature. PVC-acrylic filters were chosen in this research for several reasons. First, it was desired to duplicate the final IR analytical step of MSHA's P-7 method for quartz analysis, which has demonstrated reliability over many years. Second, other researchers have had good success in performing IR analysis with such filters. Third, the variety of products and pore sizes available in the PVC-acrylic composition is adequate for the various phases of this work—wet deposition during research and air deposition for final implementation. Filters of 0.45-μm pore were used in analyses performed at the instrument beam focus to parallel the MSHA P-7 method. Filters of 0.8-μm pore were used for full-face analyses with the custom accessory. They were chosen because this pore size is the smallest that might be expected for final adoption in field use, pressure drop requirements being the limiting factor. The chemical composition of the filters were identical.

Filters presented no outstanding problems during the sample handling process. Weight stability was always adequate. Filters were easily deionized of static charges. Spectral stability was excellent for filters mounted in the FTIR sample compartment. Exposure to the dry-air purge of the FTIR did not cause spectral changes with time. Either equilibration with the purge atmosphere was very quick, or any spectral modifications resulting from a thermal and atmospheric equilibration are insignificant. The purge for the FTIR is reestablished within 3 min of closing an opened sample compartment. Although the purge is always imperfect, with residual water and carbon dioxide peaks being found in most spectra, the spectra of the filters themselves do not change with longer exposure to FTIR purge.

DEPOSITION TECHNIQUES

When the limits of performance of an analytical technique are investigated, predictable, reproducible, and accurate production of samples is required. Wet deposition, again paralleling the MSHA P-7 method, was the only workable method of sample preparation. To determine detection limits, very low quantities of quartz had to be deposited on filters. Air deposition depends on mass balances to measure the amount of dust deposited. Experience has shown that errors of 20 to 30 μg in weighing of filters are common with conventional analytical balances. Variation in preparation procedures, static charges, moisture pickup, and operator error are contributing factors as well as the performance of the balance itself. Therefore, preweighing and postweighing of filters cannot accurately determine mass deposits of 100 μg or less. Consequently, wet deposition is the only means to reliably and accurately produce the full range of desired quartz deposits.

Wet deposition is accomplished by weighing a substantial amount of quartz dust (1 mg or more) and diluting it in an appropriate volumetric flask with isopropyl alcohol (IPA). The range of concentrations may be 1 to 100 μg of quartz per milliliter of IPA. The dust is dispersed in the IPA by placing the flask in an ultrasonic bath for 10 to 20 min. A precision pipette (volumetric or graduated, accurate to plus or minus 1% of full volume) is then used to deliver one or more aliquots of the dilution to the receiving filter. All weighings, dilutions, and transfers must be done with care to ensure that the amount of quartz placed on the filter is very accurately known.

Attempts to accomplish wet deposition with water solutions were unsuccessful. Water has poor surface tension properties, so dusts do not disperse easily even with prolonged sonication or use of surfactants. IPA allows dusts to disperse very easily. PVC and PVC-acrylic filters tolerate IPA very well. The spectra of IPA-leached and nonleached filters were identical. At most, a minor component may be leached from the filters, such as an antistatic agent or a trace of solvent remaining from the original polymer manufacture. As a matter of good practice, IPA-leached filters were used for spectral reference specimens.

FILTER EFFICIENCY DURING WET DEPOSITION

Approximately 35% of the mass of Min-U-Sil 5 quartz dust is attributable to submicrometer-size spherical equivalent diameter particles (*14*). The question arose as to whether the filters used during wet deposition adequately retain the smaller particles since liquid filtration is usually regarded as being less efficient than air filtration (*23*). Both PVC and PVC-acrylic filters with nominal pore ratings from 0.2 to 0.8 μm were tested for liquid filtration

efficiency with Min-U-Sil 5 quartz dust. Quartz-bearing IPA solutions were passed through the filters using vacuum techniques identical to those used for sample preparation. PVC backup filters with 0.2-μm pore size were used. FTIR analysis of the backup filters showed no evidence of quartz breakthrough or bypass; that is, no quartz was detected on the backup filters. The examination of backup filters shows that wet deposition may be done on a variety of filters without major risk of poor collection efficiency. Care must be taken, however, to ensure a tight seal around the filter area collecting the dust—a rule of thumb for all filtration work.

PREPARATION AND ANALYSIS OF CALIBRATION STANDARDS

Two series of calibration standards were prepared—one for analysis at the beam focus of the FTIR and the other for analysis with the custom filter holder. Both series were prepared by wet deposition using quartz suspended in IPA. In each series, the diameters of the deposits, 7.5 or 33 mm, were chosen to be appropriate for the beam diameter at the filter mounting site. Different deposition apparatuses were used for achieving the different deposit diameters, but the same wet deposition technique was used. Dust was always deposited on the rougher, duller side of filter membranes to lock dust deeper into the filter, making it more secure.

To prepare calibration standards for the custom filter holder, 37-mm diameter, 0.8 μm-pore PVC-acrylic filters were placed in the base of ordinary polystyrene 37-mm cassettes, backed by a cellulose support pad. A 2-in-long cylindrical cassette extension was tightly pressed into the cassette base, holding the filter and support pad in place and forming a reservoir above the filter surface. The circumference of the cassette base and extension was wrapped with fluorocarbon polymer tape (commonly used with threaded fittings) to ensure a no-leak fit. The filter was then wetted with a small amount of HPLC-grade IPA (pure grade of IPA appropriate for high-pressure liquid chromatography), and brief suction to the cassette drew the pure IPA through the filter. Next, the quartz-IPA solution was added to the cassette, and again suction was applied to drain the solution through the cassette. Last, a wash bottle with IPA was used to rinse the walls of residual quartz and a final suction ensured that all quartz was finally on the filter. The cassette was carefully pried apart, and the filter was placed in a polystyrene petri slide to dry, warmed by a light box of the type commonly used for viewing films or photographic slides. This procedure ensures a 33-mm-diameter deposit on a 37-mm-diameter filter. Extensive FTIR examination of filter samples treated in this manner showed no evidence of any material leaching out of the cassette or petri-slide components and contaminating the filters; extra IR absorbance bands indicative of contamination never occurred. Since the apparatus components are cheap and expendable, the method is well suited for sample preparation. Any polystyrene component that cracked in use was discarded and replaced with a fresh component.

Once the filters were prepared, they were placed in the 37-mm custom filter holder to be analyzed by the FTIR spectrometer. Computerized routines subtracted the spectral contributions of IPA-leached filter blanks from those of quartz-deposited filters to arrive at the spectra of the quartz. The mass ratio of the filter blank to the deposition filter provided the subtraction factor for such routines. The resulting residual spectra of quartz were analyzed using interactive computer baseline correction and by measuring the peak heights of quartz absorbance bands. Operator judgement was actively used during the measurement of each quartz band height. Appropriate minima on either side of an absorbance band were chosen as points through which to place a baseline. The wavenumber position of the minima could vary slightly from sample to sample. Once the minima were chosen, an automatic straight-line baseline correction function was executed for the particular band being examined. The resultant screen graphics would present a spectrum with one absorbance band over a horizontal baseline, and the rest of the spectrum unmodified for baseline drifts. The maximum of the absorbance band over the synthetic baseline was measured using a screen cursor accurate to 0.0001 absorbance unit. The maximum wavenumber position of an absorbance band could also slightly vary from sample to sample. The effects of finite spectral resolution and residual random noise cause minor shifts in band position. Each band of each spectrum was examined in turn by this procedure.

For samples analyzed at the FTIR beam focus, 47-mm-diameter, 0.45-μm pore uncut PVC-acrylic filters were placed on common 25-mm fritted glass filtration supports, backed by glass fiber pads. A glass chimney with a 7.5-mm bore was placed on top of the filter and pad and clamped into place with a common aluminum filtration clamp. The method of depositing the quartz is the same as that described for the cassette apparatus, but a 7.5-mm-diameter deposit is the result.

Once the filters were dry and ready for analysis, they were mounted on a magnetic sample holder, typical of many common film holders for FTIR spectrometers. The deposition area was visually aligned in the center of the film holder aperture. The routines for determining quartz

using the FTIR spectrometer were exactly as described for the full-face deposit filters. The 7.5-mm deposit was just small enough to be reliably mounted within the 12-mm beam focus. A 7.5-mm deposit in a 12-mm beam leaves only 2.25-mm spare room anywhere around the deposit to compensate for misalignment in standard film accessories that depend completely on the operator's eye for proper placement. The deposit could not have been made larger without risking visual misalignment for these particular experiments. Other analysts may choose other size deposits for their own purposes.

SPECTROMETER RESOLUTION

The narrowest quartz absorption bands in a mid-IR spectrum are 20 cm^{-1} wide. Spectrometer resolution was set at 4 cm^{-1}, allowing five data points for these bands. Finer resolution gave unnecessary detail with undesirable noise. Coarser resolution reduced the noise, but failed to give adequate detail of the narrow bands. To determine the general spectral properties of a filter sample, 16 or 64 scans were adequate. For actual analytical procedures, 256 scans were taken at the 4-cm^{-1} resolution. This number of scans improved noise levels in the IR region where quartz has its absorption bands (below 2,000 cm^{-1}). Signal-to-noise ratio improves proportionally with the square root of the number of scans. Total analysis time per sample was 8 to 9 min, including 4 min for scanning, 3 min for reestablishing dry-air purge, and the remainder for filter handling time and keypunch manipulations. This ultimately means that processing of many samples in a laboratory workday will be achievable. The operating parameters described may be adjusted for any particular analyst's needs, or to optimize the procedure for the particular FTIR used.

EXPERIMENTAL OBSERVATIONS AND RESULTS

NATURE OF FTIR SPECTRA FOR QUARTZ ON FILTERS

In the mid-IR region, quartz has absorption bands at 1,087, 799, 780, 695, 524, and 467 cm^{-1}. Two of the quartz absorption bands, however, have limited usefulness. The absorption band at 695 cm^{-1} is very weak and is often indistinguishable from background noise. A nearby carbon dioxide absorption band at approximately 670 cm^{-1} is close enough to cause some interference, particularly if the air purge is not fully effective and the carbon dioxide band is strong and broad. Interference fringes are also a significant concern when trying to examine weak absorption bands. This class of interference will be discussed in detail in the "Problems Caused by Interference Fringes" section. These problems make useful quantification of the 695-cm^{-1} absorption band extremely difficult. The absorption band at 1,087 cm^{-1} is strong, but very broad. Its broadness, complicated by frequent baseline anomalies and noise interference, make baseline correction for this band very arbitrary. Therefore, measuring the height of this band is very unreliable. The remaining four bands at 799, 780, 524, and 467 cm^{-1} are quite suitable for quantifying quartz. Although random noise is reduced by an FTIR's capacity to scan rapidly and coadd many scans, it is not eliminated. Furthermore, no spectrometer, including FTIR, is immune to light-scattering effects and the anomalies they may produce in spectra. The samples being examined, consisting of filters deposited with dust, are prone to scatter light.

Figure 7 shows a characteristic FTIR spectrum of quartz. It was obtained from analyzing approximately 10 μg of Min-U-Sil 5 quartz dust on a polymer filter analyzed at the beam focus. The most dominant influences of the filter have been removed by spectral subtraction of a blank reference filter. The spectrum of quartz as recorded in figure 7 summarizes some characteristics that are products of both the sample matrix and errors common with FTIR. Random noise increases above 2,000 cm^{-1}. Beyond 3,000 cm^{-1}, the noise level renders that portion of the spectrum useless. Fortunately, quartz absorption bands occur closer to the far IR region and are not obscured by this noise. Noise at high wavenumbers while using

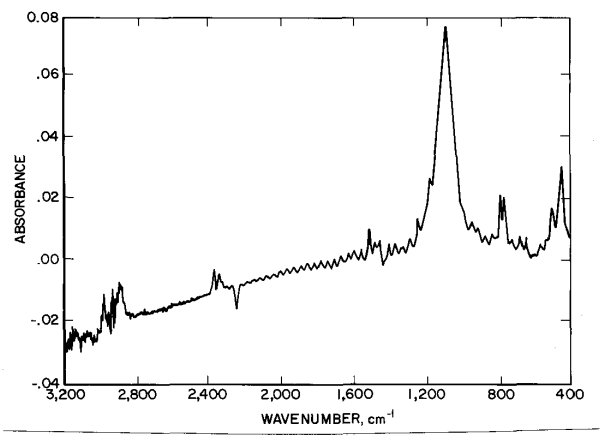

Figure 7.—Characteristic FTIR spectrum of quartz on polymer membrane filter.

polymer membrane samples results from light scattering. The high-frequency light is more likely to refract while passing through the many pores of the filter. Such a light path involves many transitions through areas of differing density and refractive index—solid to air and air to solid. Also, a sinusoidal variation in the baseline can add or subtract from the major peaks. These periodic, nonrandom oscillations are called interference fringes.

CUSTOM VERSUS STANDARD FILTER HOLDER

Problems Caused by Light Scattering

Figures 8 and 9 show typical FTIR spectra of polymer filters, referenced to air. Figure 8 shows both low and high wavenumber regions of a spectrum in which a filter was analyzed at the beam focus position. Figures 9 shows both low and high wavenumber regions of another spectrum in which a filter was analyzed with the custom accessory. These spectra display more clearly some of the effects of light scattering. Each filter, even before dust deposition, is a separate specimen having its own mass, texture, and pore distribution. Therefore, each filter will scatter light to different degrees. There are, however, general trends in all the filter spectra.

Light scatter does not affect random noise at low wavenumbers. At 2,000 cm^{-1}, all the FTIR spectra were quite noise free, showing random variation in the background as low as 0.001 absorbance unit. Toward the far-IR, at about 500 cm^{-1}, random background variations for all FTIR spectra were still only about 0.002 absorbance unit. The random fluctuations recorded are affected by the ratio of energy throughput to detector noise (or more generally speaking, the entire electronic system noise). At the ends of the mid-IR range, either high or low wavenumber, the source will have a lower energy output, which will affect the energy level reaching the detector. At low wavenumbers, however, there is no light-scattering phenomenon to further diminish light reaching the detector. Therefore, the detector still records a stable signal at low wavenumbers. At high wavenumbers, diminished source output and high light scatter combine to greatly reduce light reaching the detector. The result at high wavenumbers is that detector noise has a substantial impact and the signal recorded is unstable.

In figures 8 and 9, it can be seen that the baselines beneath the absorbance peaks are close to flat below 1,600 cm^{-1}, and in general, the baseline curvatures are not very pronounced below 2,000 cm^{-1}. Light scatter does not affect the shape of baselines of spectra much at low wavenumbers.

In figures 8 and 9, steep slopes in the baselines can be seen from 2,000 to 3,400 cm^{-1}. This slope in the baselines

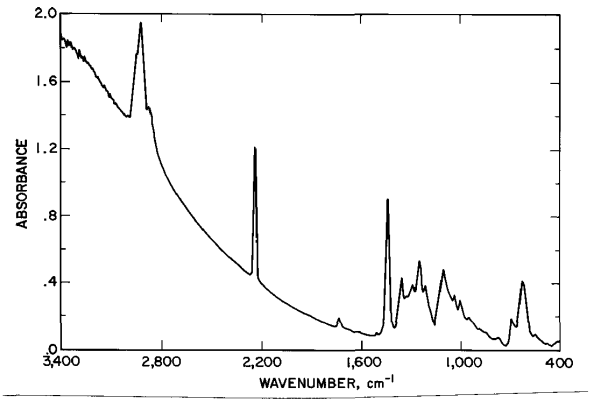

Figure 8.—Spectrum of PVC-acrylic filter taken at beam focus, 400 to 3,400 cm^{-1}.

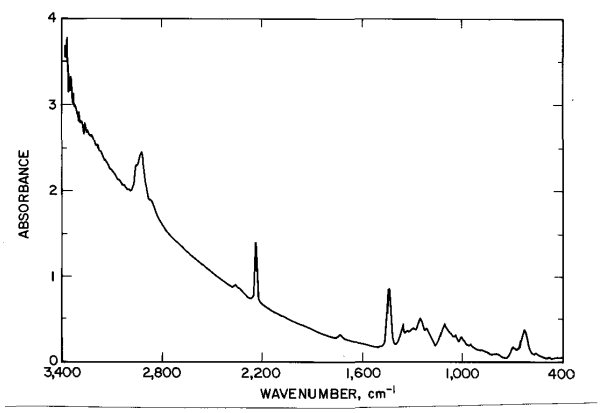

Figure 9.—Spectrum of PVC-acrylic filter taken with custom accessory, 400 to 3,400 cm^{-1}.

also results from light scattering. As the wavenumber increases, more light is scattered, causing a false absorbance manifested in a rising baseline. At 3,400 cm^{-1}, the beam focus absorbance is about 1.8 while the custom accessory absorbance is about double that at 3.6 absorbance units. The slope is steeper with the custom accessory and much more light is being scattered at higher wavenumbers when the custom accessory is being used.

At high wavenumbers, random noise and the resulting baseline problems caused by light scattering are consistently worse while using the custom filter holder rather than using standard sample placement at the beam focus. This is because the IR beam passes through a much higher mass of filter material when using the custom holder. As discussed previously, however, the absorbance bands for

quartz are below 2,000 cm^{-1} where the baseline tends to be better behaved. At lower wavenumbers, common baseline correction procedures are usually adequate. Toward the far-IR region, light scattering is less severe and the performance of the custom accessory is very much like beam focus analyses.

Some problems with data variability were expectable since light scattering is not likely to be exactly reproducible on repeat measurements. This has been reported by other researchers (*17, 24*). Also, even minor difficulties in positioning a filter in the IR beam can affect the resultant measurement. Averaging data points was chosen to produce the best calibration plots. The final issues are whether the customized accessory performs adequately in comparison to analysis at the FTIR beam focus and how FTIR performs in comparison to dispersive instruments.

Problems Caused by Interference Fringes

In addition to light-scattering and noise-related phenomena, baselines may also show a sinusoidal variation, which in figure 7 is most apparent below 2,000 cm^{-1}. Since the opposite faces of membrane filters are smooth and parallel and the refractive index changes abruptly between the filter surface and the sample compartment air, the IR light undergoes internal reflections within the filter. Constructive and destructive interferences occur between the primary IR beam and that portion of IR light that has gone through the extra reflections. The net effect on the spectrum is rhythmic baseline oscillations, called interference fringes. Interference fringes are more common with FTIR and tend to be less of a problem in spectra collected with dispersive instruments. The FTIR spectrometer is actually more accurately recording the more subtle properties of the sample, which the less sophisticated dispersive IR instrument would less often display. The spectral precision of FTIR often allows the fine detail of a spectrum to be seen more clearly.

Figure 10 shows an expansion of figure 7, the spectrum for about 10 μg of Min-U-Sil 5 quartz dust on a polymer filter analyzed at the beam focus. (The interference fringe at 670 cm^{-1} also shows the presence of trace carbon dioxide.) Not only is it difficult to tell the peaks apart, but the interference fringes are adding to the quartz peaks, affecting their shape and height. When the amount of quartz deposited on a filter is low (below 25 μg), the heights of interference fringes begin to be a significant percentage of quartz peak heights.

Several options that have been proposed for removing interference fringes include

1. Using sophisticated software programs to alter the data the FTIR collects and the mathematical processing that follows.
2. Tilting the sample membrane in the IR beam path or curving it into a nonflat surface.
3. Spraying a light layer of oil on one surface of the filter to change its refractive index.
4. Using reference filters that are very carefully matched by manufacturer, composition, batch, and mass. Filter thickness will correlate well with mass.
5. Using a larger analytical beam over a larger cross section of the sample area to incorporate more minor irregularities of the sample and reduce the internal reflection phenomenon.

Further research is needed to determine which of these options will work best and with greatest reliability. Work to date has demonstrated that the use of asymmetric filters in which the size of the pores are different on opposite sides of the filter does not eliminate interference fringes. The change in refractive index in asymmetric filters, varying with depth in the filter, is insufficient to prevent internal reflections of light from occurring. Filters that do not appear mirrorlike on visual examination or by general conjecture are still reflective in nature to the IR beam. Well-matched reference filters seem to be helpful. Use of the custom filter holder incorporates option 5 above, also with some encouraging results.

Interference fringes were not found to be a severe problem for analyses at either the beam focus or with the custom accessory. They were hardly ever seen with custom accessory analyses. The examination of a larger filter area includes more filter irregularities within the analytical beam, and the filter appears less mirrorlike to the beam. At the beam focus, interference fringes of 0.003 absorbance unit in height were seen regularly between 850 to

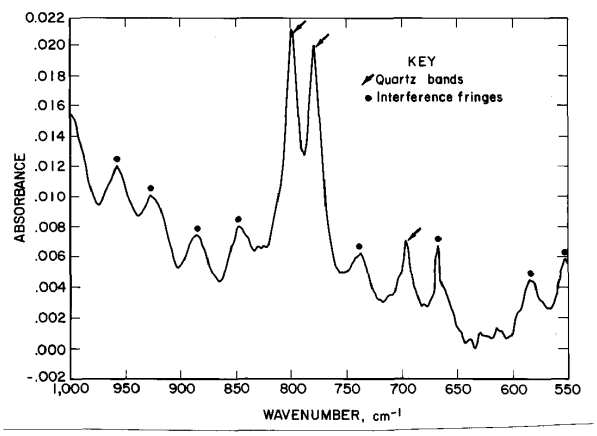

Figure 10.—Interference fringes complicating spectrum of quartz.

2,200 cm^{-1}. The importance of this type of interference for analyses at the beam focus is about the same as random noise. Interference fringes pose a problem for accurately measuring very small quantities of quartz; strategies for alleviating the problem were given above. Current good results with interference fringes, however, are not a guarantee for future specimens that may be examined. Discussion of this type of interference is important in that earlier researchers investigating on-filter analysis have failed to address the topic.

Detection Limits and Sensitivity

As described above, a series of calibration curves were prepared using standards with Min-U-Sil 5 quartz dust deposited on polymer filters. Figures 11 and 12 show the results for 7.5-mm-diameter deposits analyzed at the beam focus. Figures 13 and 14 show the results for full-face deposits analyzed at the 37-mm insert position of the custom filter holder. Data points in figures 11 through 14 are all the averages of two spectroscopic measurements. The appendix presents all relevant data in tabular form.

The detection limit at the beam focus is approximately 2 μg quartz. The detection limit with the custom accessory is approximately 20 μg quartz. These detection limits are defined as those quartz concentrations with at least two absorbance bands having absorbance heights approximately three times the background noise. In examining figures 11 through 14, it can consistently be said that readings taken with the custom filter holder are approximately one order of magnitude less sensitive than beam focus readings for all absorbance bands tested. If random noise and interference fringes could be reduced, the detection limits would be improved. The detection limit of the custom accessory, while significantly higher than the beam focus measurements, is still in the range of usefulness and very comparable to the detection limit of dispersive methodologies. Further research will improve the custom accessory performance. Additionally, it can be said that the FTIR beam focus sensitivity is much better than that seen with dispersive instruments, as recorded in the literature. The recent adoption of FTIR for IR quartz analysis will greatly improve the detection limit, as long as problems common with FTIR, such as interference fringes, can be resolved.

Based on fundamental principles of spectroscopy, the above observations were expected. That is, results with the custom accessory would not be as sensitive as measurements done at the beam focus. Analytical sensitivity is inversely proportional to the cross-sectional area of the

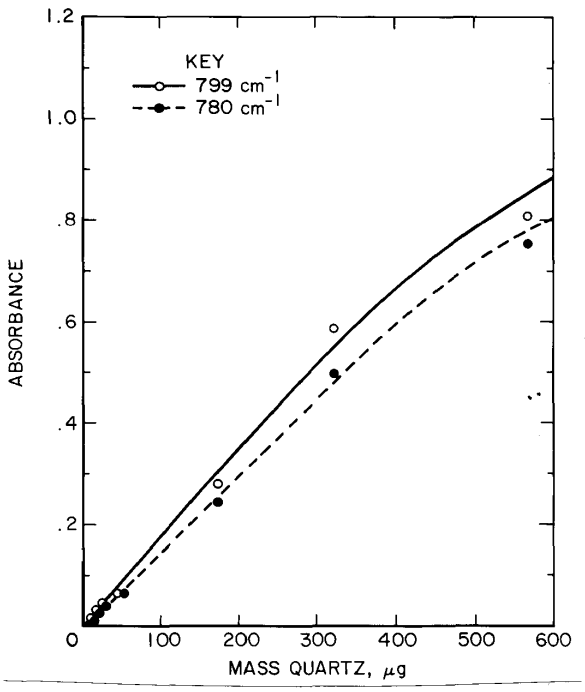

Figure 11.—Calibration curves for quartz 799- and 780-cm^{-1} bands analyzed at beam focus.

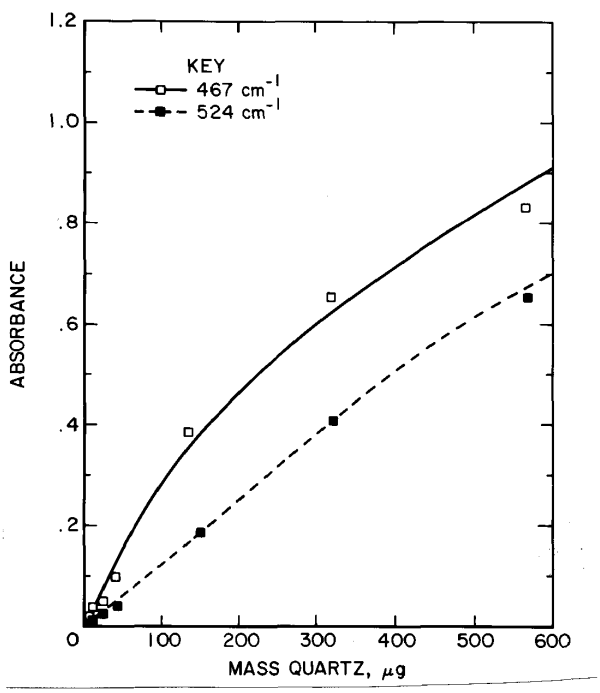

Figure 12.—Calibration curves for quartz 524- and 467-cm^{-1} bands analyzed at beam focus.

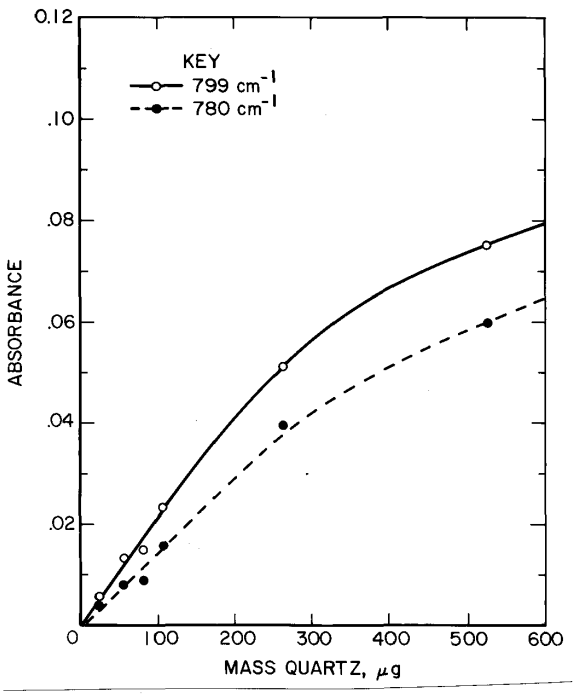

Figure 13.—Calibration curves for quartz 799- and 780-cm^{-1} bands analyzed with custom filter holder at 37-mm position.

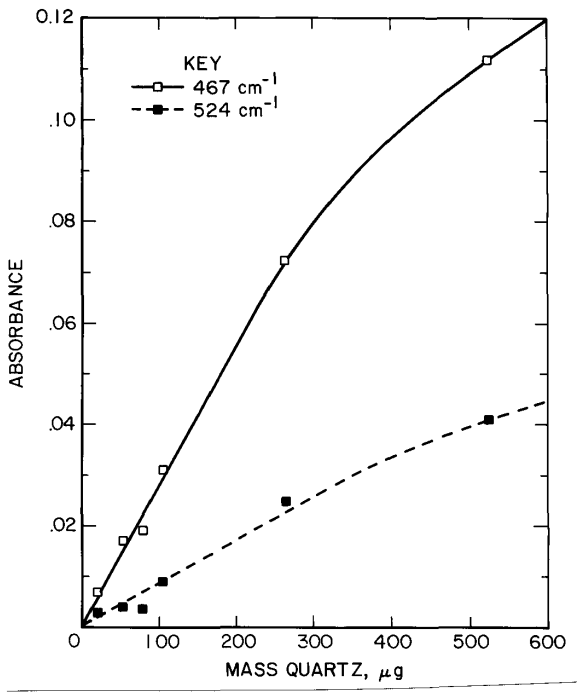

Figure 14.—Calibration curves for quartz 524- and 467-cm^{-1} bands analyzed with custom filter holder at 37-mm position.

beam at the location of analysis. To be specific, since the beam focus measurements involve a beam diameter of 12 mm and the full-face measurements involve a beam diameter of 33 mm, the ratio of areas predicts a ratio of 7.6 for the relative sensitivities. This is an approximation that would apply to both the quartz levels at the detection limits and quartz concentrations much higher than the detection limits. The ratio between the two would never be an exact 7.6 because of light-scattering complications and a variety of practical considerations not accounted for in the ideal inverse area rule. Generally, however, it would be expected that measurements done in the full-face mode should be about an order of magnitude less sensitive than beam focus measurements. The experimental results conform to this expectation.

DISCUSSION

There remain quite a few options for improving sensitivity with the custom filter holder for on-filter analysis. First, and most simply, a more open aperture from the source might be tried, allowing more IR energy through the samples. Next, work with far-IR optics might be done for scanning 250 to 1,500 cm^{-1}. This is the spectral region of most interest, and using optics designed for that region will reduce noise. Beyond this, there is also the option of trying a different type of interferometer with continuous, self-correcting alignment that would also reduce noise. Finally, data processing features could enhance the spectra. Generally, no aspect of the analyses performed with the custom accessory was unexpected or disappointing. However, further research is required to determine the full potential of the accessory and the role it may play in finally achieving on-filter analysis of quartz.

The four absorbance bands analyzed were at 799, 780, 524, and 467 cm^{-1}. The two bands closer to the far-IR, 524 and 467 cm^{-1}, were as useful in quantifying quartz as those at the 799- and 780-cm^{-1} positions. The far-IR bands also overlap less than the 799-780 doublet. The 799- and 780-cm^{-1} bands, however, were used by most earlier analysts to quantify quartz for several reasons. These two bands fit into a low-absorbance section of PVC-acrylic filter spectra. Previous analysts experienced good linearity in calibrations with these bands, and they generally desired to examine the minimum number of bands possible to proportionally minimize their own work. Also, technological limitations of instruments made far-IR examinations more challenging in the past. The bands toward lower wavenumbers, however, have advantages prominent enough to merit augmenting measurements of the traditional bands with the far-IR bands. Because of recent advances in spectroscopic hardware and software, there has been a trend toward examining more than a minimum one or two absorption bands in spectra. Advances in data processing also make such practices more feasible.

Ultimately, automated analysis of spectral data will probably play a role in reaching the goal of the research—the fastest and most accurate analytical method that can be achieved. Interactive manipulations by the instrument operator give opportunities for error at each step of analysis.

First, the filter must be mounted in the sample compartment. For this step, there is no possible error for the custom accessory because the filter fits tightly in its receptacle and aligns precisely with the IR beam. For mounting devices at the beam focus, a visual alignment must be done. This is particularly difficult if the quartz deposit is light. Even if the quartz deposit is consistently placed in the analytical beam, minor changes in the filter orientation can affect both light-scattering and baseline properties in the final spectrum.

Second, when interactive subtraction of a blank reference filter is done, the operator cannot totally rely on the relative masses of the sample and reference filters for the subtraction factor. For analyses at the beam focus, only a portion of the filter is examined. A calculated subtraction factor is a good starting place, but then visual judgment of the operator is needed to evaluate the spectral display. Calculated subtraction factors are considerably more reliable when using the custom accessory because whole filters are being examined. In any case, subtraction anomalies can result that make subsequent baseline correction more difficult.

Third, a baseline must be electronically drawn on the FTIR monitor screen under each absorption band of interest. This involves the operator making a best guess for appropriate end points of the baseline (absorption minima) on either side of the absorption band. If different baselines are drawn, different peak heights will result.

These three errors occur with dispersive instruments as well as FTIR. A means must be found to circumvent operator error, if quartz analysis is to be improved with any instrument. For example, if a 10% error is introduced at each analytical step, 30% total error may result in worst cases. Experimentally, much data have been gathered in this research with 15% variability or less, while the remainder of spectra collected show greater variability. Proof of concept for on-filter analysis by FTIR has been demonstrated, but the technique needs much development work.

CONCLUSIONS

Because of the higher energy throughput characteristic of FTIR instruments, they are more sensitive and versatile than dispersive IR hardware. If the instrument beam geometry is appropriate, this advantage is exploitable in the design and use of a beam-matching accessory for analysis of dust collection filters. In comparing on-filter analyses for quartz deposited on polymer membrane filters by various IR techniques, FTIR analyses performed at the beam focus are the most sensitive, with a detection limit of 2 μg. This is of particular interest to analysts who prefer sample concentration involving filter ashing and redeposition of residue onto a smaller deposit area. FTIR analyses performed with a customized beam-matching accessory compare favorably with analyses done with dispersive instruments, according to information available in the literature. While the custom accessory cannot fully achieve the sensitivity of FTIR beam focus analyses, the detection limit is an acceptable 20 μg quartz, similar to current dispersive methods, with future research likely to improve this limit. The custom accessory is more vulnerable to light-scattering and random noise phenomena than FTIR beam focus analyses, but less susceptible to interference fringes or optical alignment problems. Many of the problems encountered are unimportant in the wavenumber range of interest for quartz analysis, particularly below 1,000 cm^{-1}. That is, spectral quality is much better

at low wavenumbers than at high wavenumbers for filter samples. Because of this, future work with far-IR optics is a promising option. It is undetermined whether the custom accessory is the definitive means to achieve on-filter analyses of field samples. However, the accessory performance is satisfactory, conforming to expectations based on basic principles of spectroscopy, and it merits continued work. A significant research variation that may give optimum results and minimize sample matrix problems involves use of sampling cassettes that deposit dust uniformly. Filter samples from such cassettes might be used in conjunction with or apart from the custom accessory, although wholesale adoption of new cassettes would likely be a challenging undertaking. With continued research, on-filter analysis of field samples seems achievable through use of readily obtainable equipment and accessories. Many avenues remain open for continued progress toward this goal.

REFERENCES

1. Bureau of National Affairs, Inc. Need for Surveillance, Training Seen Emphasized in NIOSH Strategies. Occup. Saf. and Health Reporter, May 9, 1985, p. 971.

2. ____. Decade of Coal Worker Autopsy Data Shows Black Lung Death Rate "Relatively Low." Mine Saf. and Health Reporter, Oct. 17, 1984, p. 184.

3. Tomb, T. F., R. G. Peluso, and P. S. Parobeck. Quartz in United States Coal Mines. Ann. Am. Conf. Gov. Ind. Hyg., v. 14, 1986, pp. 513-519.

4. Bureau of National Affairs, Inc. Bureau Predicts Quartz Dust Will Affect Two-Thirds of Coal Work Force Next Year. Mine Saf. and Health Reporter, Oct. 17, 1984, p. 185.

5. U.S. Mine Safety and Health Administration, Instrumentation and Analytical Branch. Infrared Determination of Quartz in Respirable Coal Mine Dust, Chemical Method No. P-7, Aug. 3, 1989, 19 pp.

6. U.S. Mine Safety and Health Administration. MSHA's Procedure for Determining Quartz Content of Respirable Coal Mine Dust. MSHA IR 1152, 1984, 13 pp.

7. Courtney, W. G. Dust Control. Ch. in Underground Mining Methods Handbook, ed. by W. A. Hustrulid. Soc. Min. Eng. Am. Inst. Min., Metall., and Petroleum Eng., Inc., 1982, pp. 1687-1710.

8. Ainsworth, S. M., P. S. Parobeck, and T. F. Tomb. Determining the Quartz Content of Respirable Coal Mine Dust by FTIR. MSHA IR 1169, 1989, 11 pp.

9. Smith, A. L. Applied Infrared Spectroscopy. Wiley, 1979, 322 pp.

10. Griffiths, P. R., and J. A. deHaseth. Fourier Transform Infrared Spectrometry. Wiley, 1986, 656 pp.

11. Ferraro, J. R., and L. J. Basile, (eds.). Fourier Transform Infrared Spectroscopy. Acad. Press, v. 1: Applications to Chemical Systems, 1978, 311 pp.; v. 2: Applications to Chemical Systems, 1979, 321 pp.; v. 3: Techniques Using Fourier Transform Interferometry, 1982, 215 pp.; v. 4: Applications to Chemical Systems, 1985, 406 pp.

12. Toma, S. Z., and S. A. Goldberg. Direct Filter Infrared Analysis of Alpha Quartz Deposited on Filters. Anal. Chem., v. 44, No. 2, Feb. 1972, pp. 431-432.

13. Freedman, R. W., S. Z. Toma, and H. W. Lang. On-Filter Analysis of Quartz in Respirable Coal Dust by Infrared Absorption and X-Ray Diffraction. Am. Ind. Hyg. Assoc. J., v. 35, July 1974, pp. 411-418.

14. Anderson, C. C. (SRI International). Collaborative Tests of Two Methods for Determining Free Silica in Airborne Dust (NIOSH contract 210-79-0059). Final Rep., Feb. 1983. U.S. Dep. Health and Human Serv. (Natl. Inst. for Occup. Saf. and Health), No. 83-124, Oct. 1983, 157 pp.

15. Hunsacker, H. A., R. A. Buchan, T. J. Keefe, and W. E. Marlatt. Characterization of Asbestos Fiber Distribution on Membrane Filters From 25- and 37-mm Sampling Cassettes. Appl. Ind. Hyg., v. 3, No. 10, Oct. 1988, pp. 284-290.

16. Winn, C., and H. A. Mercer. The Effect of Filter Holder Design on Particle Deposition Patterns. Presented at AIHA Conference, Portland, OR, May 25-29, 1981, 7 pp.; available from Glasrock Medical Services, Fairburn, GA.

17. Harris, G. W., and G. S. Revell. Environmental Monitoring: 5 (Notes on the Analysis of Free Silica). Health and Safety at Work (Croydon, United Kingdom), v. 3, Jan. 1981, pp. 52-56.

18. Foster, R. D., and R. F. Walker. Quantitative Determination of Crystalline Silica in Respirable-Size Dust Samples by Infrared Spectrophotometry. Analyst (London), v. 109, No. 9, Sept. 1984, pp. 1117-1127.

19. Cahn, L. Dynamic Weight Changes of a Membrane Filter With Humidity. Mater. Res. and Stand., v. 3, No. 5, May 1963, p. 377.

20. Drolet, D., and G. Perrault. Applications of a Mathematical Model of Weight Correction for Several Membranes Used for Dust Sampling. Presented at AIHA Conference, Montreal, Quebec, Canada, May 31-June 5, 1987, 23 pp.; available from Institut de Recherche en Santé et en Sécuritité du Travail du Québec, Montreal, Quebec, Canada.

21. Beaulieu, P., G. Perrault, and C. Roy. Mesure de poussieres dans l'air ambiant: Correction de la masse des membranes filtrantes d'ester de cellulose en function de l'humidité atmosphérique. (Measurement of Dust in the Ambient Atmosphere: Weight Correction as a Function of Humidity of Cellulose Ester Filters). Analusis, v. 14, No. 2, 1986, pp. 74-78 (Engl. sum.).

22. Meltzer, T. H. Choosing Membrane Filters—In-Use Assessment Is Best. Microcontamination, v. 6, No. 8, Aug. 1988, pp. 30-33.

23. Brock, T. D. Membrane Filtration: A User's Guide and Reference Manual. Sci. Tech Inc., Madison, WI, 1983, pp. 15-25.

24. Kaufman, R. A. Evaluation of FT-IR Spectrometry as a Method for the Determination of Crystalline Silica in Respirable Dust Samples. M.S. Thesis, Grad. Sch. of Public Health, Univ. Pittsburgh, Pittsburgh, PA, 1987, 73 pp.