A mining research contract report

SEPTEMBER 1984

A MEDIUM FREQUENCY WIRELESS COMMUNICATION SYSTEM FOR UNDERGROUND MINES

Contract H0308004

A.R.F. PRODUCTS, INC.

BUREAU OF MINES
UNITED STATES DEPARTMENT OF THE INTERIOR

The views and conclusions contained in this document are those of the authors and should not be interpreted as necessarily representing the official policies or recommendations of the Interior Department's Bureau of Mines or of the U.S. Government.

50272-101

REPORT DOCUMENTATION PAGE	1. REPORT NO.	2.	3. Recipient's Accession No.

4. Title and Subtitle
A Medium Frequency Wireless Communication System for Underground Mines

5. Report Date
Sept.1984(Date Published

6.

7. Author(s)
Dr. Larry G. Stolarczyk

8. Performing Organization Rept. No.

9. Performing Organization Name and Address
A.R.F. Products, Inc.
Gardner Road
Raton, New Mexico 87740

10. Project/Task/Work Unit No.

11. Contract(C) or Grant(G) No.
(C) H0308004
(G)

12. Sponsoring Organization Name and Address

13. Type of Report & Period Covered
Final - 28 DEC. 1979
31 MAY, 1984

14.

15. Supplementary Notes

16. Abstract (Limit: 200 words)

This report deals with information regarding a new Medium Frequency (MF) Wireless Communication System for underground mines. This new telecommunication system works on low loss electromagnetic wave propagation modes which allow it to provide quality radio communications almost anywhere in a mine.

Tests show the MF system can provide improved safety and managerial control, increased productivity, better organizational team-work and reduced maintenance cost; furthermore, MF's unique design allows for easy installation at a minimum cost.

This paper covers the following: 1) MF design plan, 2) Overview of mine radio communications systems, 3) Preparations needed for designing an MF system, 4) MF equipment, 5) MF installation, 6) MF design considerations, 7) MF design specifications, and 8) Recommendations dealing with MF system.

Experiments in four mines are illustrated to demonstrate the success and viability of the MF system. The mines range from small (500 tons/day) to large (67,000 tons/day) capacity and represent several different mining methods. The MF Wireless Communication System represents an advancement in mining communication and the groundwork for other advanced mine systems.

17. Document Analysis a. Descriptors

Mines; radio communications; communications; coal mines; metal/non metal mines; radio propagation; tunnel mode, coal seam mode; wave propagation; underground mine; mine rescue radio; trapped miners; radio vest transceiver; underground mines; medium frequency; existing wireplant; loop antennas, parasitic coupling;

b. Identifiers/Open-Ended Terms line couplers; radio, health and safety enchancement.

c. COSATI Field/Group

18. Availability Statement	19. Security Class (This Report)	21. No. of Pages
Release Unlimited	Unclassified	
	20. Security Class (This Page) Unclassified	22. Price

(See ANSI-Z39.18) See Instructions on Reverse OPTIONAL FORM 272 (4-77) (Formerly NTIS-35) Department of Commerce

FOREWORD

This report was prepared by A.R.F. Products, Inc., Raton, New Mexico, under USBM contract number H0308004. The contract was initiated under the Mine Health and Safety Program. It was administered under the technical direction of the Pittsburgh Research Center with Harry Dobroski acting as the Technical Project Officer. Patrick Neary was the Contract Administrator for the Bureau of Mines.

This report is a summary of the work recently completed as a part of this contract during the period January 1980 to May 31, 1983. This report was submitted by the authors on August 31, 1984.

CONTENTS

Page

Illustrations..... 10

Tables..... 14

I. Executive summary..... 16

Objective..... 16

Summary of previous work..... 20

MF equipment design..... 22

Findings and conclusions..... 25

Results of in-mine system tests..... 25

MF communication quality and range..... 27

Improvements in vehicular antenna technology..... 29

Mobile transceivers..... 30

RF line coupler design..... 31

Cost/benefit analysis..... 31

Other important uses of the MF system..... 31

II. Determining communication requirements in underground mines..... 33

Introduction..... 33

Communication needs..... 35

Organizational theory supporting communication needs..... 36

Mine Organization..... 38

Information flow..... 39

Benefit analysis..... 41

CONTENTS--Continued

Page

III. Description of the MF radio communication system..... 51

Introduction..... 51

MF architecture..... 56

Equipment..... 58

Mobile transceivers..... 58

Vest transceiver..... 58

Vehicular transceiver..... 61

Fixed location-repeaters..... 62

Base station..... 64

Coupling devices..... 65

RF line coupler..... 66

Antenna..... 66

MF installation..... 67

IV. Preinstallation preparations..... 68

Introduction..... 68

Initial radio system planning meeting..... 68

Defining communication needs..... 69

Selecting needed networks if MF radio appears to be the solution..... 70

Maintenance and production networks..... 70

Hoist and haulage networks..... 71

Emergency communications network..... 72

CONTENTS--Continued

	Page
Preparing a radio coverage area map.....	74
Insuring usage and maintenance of the system..	75
V. MF design considerations.....	79
Introduction.....	79
Signal propagation modes.....	83
Coal seam propagation mode.....	83
Tunnel propagation modes.....	86
Modulation processes.....	88
Coupling MF signals to the wireplant.....	94
Transmitting loop antenna and two-wire transmission line coupling.....	94
Transmitting loop antenna to receiving loop antenna via transmission line coupling.....	98
Attenuation rate.....	100
Loop antenna design considerations.....	102
Theoretical basis for loop antenna design...	104
Design optimization process.....	120
Design for operation in hazardous atmospheres.....	121
Vehicular antenna area constraint.....	123
Personnel antenna area constraint.....	124
RF line coupler design considerations.....	125
Considerations of acoustical device selection.....	131
Microphones.....	140

CONTENTS--Continued

Page

Noise cancelling microphones..... 140

Vest microphones..... 141

VI. MF system design specifications..... 143

Introduction..... 143

General system specifications..... 144

Standard module specifications..... 147

Base station and vehicular transceiver specifications..... 148

Standard transceiver..... 149

Remote control terminal (RCT) unit..... 153

Remote audio control head (RCH)..... 156

Remote control console (RCC)..... 157

Vest transceiver specifications..... 159

Permissible battery pack..... 165

ART - 29 vest transceiver..... 167

Repeater transceiver specifications..... 168

RF line coupler and antenna specifications. 170

VII. Field evaluations..... 172

Introduction..... 172

San Manuel copper mine (MAGMA)..... 173

MAGMA's initial communications system.... 178

Installation of MF equipment..... 183

CONTENTS--Continued

Page

MF system tests and evaluation..... 185

Test no. 1 - communications from battery powered locomotives..... 185

Test no. 2 - hoist communications test/ base station in hoist control center.... 185

Test no. 3 - hoist communications test/ base station at the collar..... 189

Test no. 4 - vest communications to audio room base station from grizzly and production levels..... 190

Conclusion..... 191

Escalante silver mine..... 192

Escalante's initial communication system... 195

Communication needs..... 195

Installation of the MF radio system..... 196

MF system tests and evaluation..... 198

Conclusions..... 201

York Canyon coal mine..... 201

York Canyon mine's initial communications system..... 203

Communications needs..... 204

Installation of MF equipment..... 204

Test results and evaluations..... 205

Conclusions..... 208

CONTENTS--Continued

Page

Star Point coal mine..... 209

Star Point's initial communication system. 210

Communication needs..... 210

Installation of MF equipment..... 211

Test results and evaluation..... 213

Conclusion..... 214

VIII. Recommendations..... 216

ILLUSTRATIONS

1-1. The MF underground radio system (tunnel mode)..... 17

1-2. The cellular repeater (seam mode)..... 23

2-1. Formulation of the system design specifications..... 34

2-2. Typical organizational chart..... 38

2-3. Typical production profile..... 43

3-1. Radio coverage cells..... 52

3-2. Coupling of electromagnetic signals to electrical conductors..... 53

3-3. Vest radio communications with the telephone network or other distant vest transceiver via the cellular repeater..... 55

3-4. MF system architecture..... 56

3-5. Vest transceiver..... 59

3-6. Control head..... 60

ILLUSTRATIONS--Continued

		Page
3-7.	Vehicular transceiver	62
3-8.	Remote control	64
3-9.	Remote control console unit	64
3-10.	Base station	65
3-11.	Tuned loop antenna	66
5-1.	Seam mode field components	84
5-2.	Signal current (I) flow on conductors	86
5-3.	Typical modulation process gain	90
5-4.	Geometries for a vertical transmission line and transmitting loop antenna	95
5-5.	Equivalent transmission line network for induced voltages and currents	96
5-6.	Signal coupling to a receiving loop antenna	98
5-7.	Setup for measuring induced line current	101
5-8.	Induced line current versus vehicular transceiver distance from base	102
5-9.	Transmitting Loop Antenna Excitation current and magnetic moment	103
5-10.	Twin-coil transmitting loop antennas	106
5-11.	Equivalent circuit of a single-coil loop antenna	106

ILLUSTRATIONS--Continued

Page

5-12. Unloaded Q versus frequency for a flexible rectangular tubular lexan antenna single rectangular coil..... 108

5-13. Unloaded Q versus frequency for a flexible rectangular planar lexan antenna..... 109

5-14. Typical matching network..... 110

5-15. Inductive coupling in the twin-coil loop antenna..... 115

5-16. Equivalent circuit of the twin-coil loop antenna..... 116

5-17. RF line coupler..... 126

5-18. Wireplant signal coupling to the toroidal coupler..... 127

5-19. Test setup for measuring induced current as a function of line resistance..... 129

5-20. Over the earth multiple wire coupling..... 131

5-21. Acoustical noise comparisons..... 132

5-22. Normalized noise frequency response of a gradient microphone..... 136

5-23. PVF2 boon microphone and circum-aural earcup speakers..... 142

6-1. Base Station and vehicular transceiver block diagram..... 152

ILLUSTRATIONS--Continued

Page

6-2. Remote control terminal (RCT) block diagram..... 155

6-3. Remote control head (RCH) block diagram..... 158

6-4. Remote control console (RCC) block diagram..... 160

6-5. Vest transceiver block diagram..... 165

6-6. Permissible battery pack block diagram..... 166

6-7. Vest transceiver..... 167

6-8. Internal tuned loop sewn into the back of vest in such a way that it is not exposed..... 168

6-9. Repeater transceiver block diagram..... 169

7-1. Field test locations..... 173

7-2. Isometric diagram of the blockcave mining method..... 174

7-3. Train loading..... 176

7-4. Planeview of track installed on the 2375 haulage level..... 177

7-5. MAGMA's communications system..... 179

7-6. Scale model of haulage system..... 182

7-7. Hoist communications system..... 188

7-8. Cross section of ore body..... 193

7-9. Side view of the vertical crater retreat mining method..... 194

7-10. Telephone cable in the Redco silver mine haulage drifts..... 197

ILLUSTRATIONS--Continued

Page

7-11. Measured level of carrier signal from vest and haulage vehicles..... 199

7-12. Test setup for measuring current induced in blasting cable..... 200

7-13. York Canyon mine..... 202

7-14. Cross section of entry (looking inby)..... 203

7-15. Measured line current as a function of the vehicular distance from the base station..... 206

7-16. Simplified drawing of mains in Star Point mine..... 211

TABLES

A. Productivity multiplier work sheet..... 49

B. MF equipment requirements for a longwall coal mine..... 73

C. Approximate mobile transceiver (tunnel mode) talk-back range..... 75

D. Comparison of single and twin-coil vehicular antenna characteristics..... 119

E. RF line coupler transfer impedance..... 129

F. Dependence and induced line current on line resistance..... 130

G. Measured sound pressure level of mining machines..... 132

H. Measured articulation index..... 141

TABLES--Continued

		Page
I.	General system specifications.....	144
J.	Standard module specifications.....	147
K.	Standard transceiver specifications.....	151
L.	Remote control terminal (RCT) specifications..	154
M.	Remote control head (RCH) specifications.....	156
N.	Remote control console (RCC) specifications...	159
O.	Vest transceiver specifications.....	162
P.	RF line coupler specifications.....	171
Q.	Antenna specifications.....	171
R.	Vest and vehicular communications to no. 5 shaft base station.....	186
S.	Hoist communications signal level (cage to base at the drum).....	188
T.	Hoist communications signal levels (cage to base at the collar).....	189
U.	Vest transceiver communications to audio room base station.....	192

I. EXECUTIVE SUMMARY

OBJECTIVE

The objectives of this work were to develop and evaluate a medium frequency (MF) radio communications system for use in coal and metal/non-metal (M/NM) underground mines which would:

- Use radio communications to minimize miner exposure to underground hazards.
- Provide the same communication advantages, reliability and operational characteristics as a surface radio system.
- Be installed in any mine within a few hours, so it could be evaluated prior to purchase.
- Achieve a balance between humanism and technology as well as survive the hostile mine environment.
- Make work tasks easier without creating additional maintenance problems that could not be solved by existing maintenance personnel.
- Have equipment that was simple enough for maintenance personnel with good electrical skills to understand and troubleshoot to the board level.

To meet these objectives, a program was setup to: (1) develop design guidelines for a system and equipment, with the assistance of mine personnel; (2) develop mock-up models of the equipment; (3) evaluate user acceptance in the mining

environment; (4) insure maintainability of the equipment by working with mine maintenance personnel; (5) determine the system's cost/benefit in various types of mines with the help of the mine engineering department; (6) build a working model of the system and evaluate it in the mine environment; and (7) correct any difficiency in the design and then evaluate performance in different mine environments over a period of time. The objectives were achieved with the MF radio system illustrated in figure 1-1.

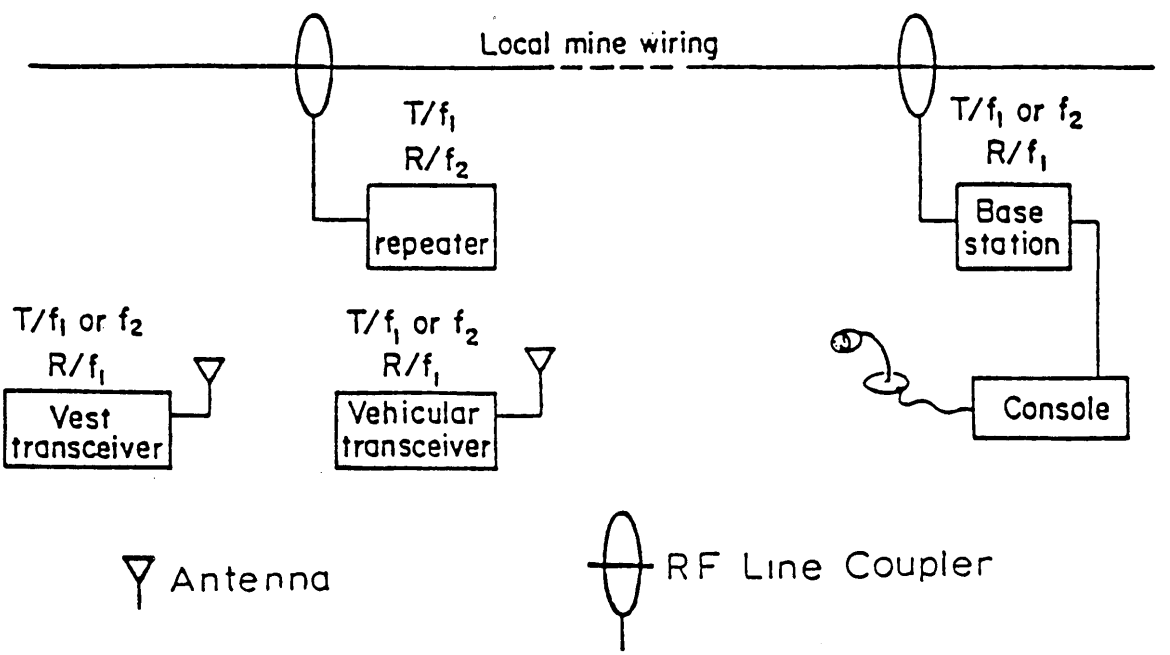

FIGURE 1-1. - The MF underground radio system (tunnel mode).

The system consists of base stations, repeaters and line couplers, vehicular transceivers and antennas, and personal transceivers configured into a vest design. Existing mine electrical conductors serve not only as the transmission

lines but also the distribution antennas in the entryways. Unit to unit communications are conducted on frequency F1. Standard repeater action is conducted by use of frequency F2. The use of a base station and repeater results in very long range. The base stations and repeaters use torroidal radio frequency (RF) line couplers to efficiently couple signals into and receive signals from all types of electrical conductors.

The radio system provides a high quality communications link between the surface complex, all types of underground vehicles, and roving miners. With the help of the mine's maintenance personnel, the equipment could be installed within a few hours due to the unique mechanical design of the antenna and coupling devices. The radio coverage area includes almost all entryways with electrical conductors. Conductorless entries require the installation of a wire pair. Communication range was measured in miles. With the MF system, maintenance, haulage and production personnel could be reached within a matter of seconds thereby reducing downtime and mining costs. Misunderstandings were minimized because first hand information was received by keymen, and safety was improved since miners were immediately advised of unexpected changes in the mining conditions.

Unexpected changes expose miners to hazardous situations. Many injury scenarios could be avoided with the use of such a radio system. For instance, in a hoist system, if the cage stops, personnel must sometimes climb down a ladder in the

shaft to determine what is wrong. Reliable radio links between shaft inspectors, hoist operators, and miners in the cages would have eliminated this. In train and belt conveyor haulage systems, serious accidents are often caused by unexpected changes. For example, without warning a train may move backward resulting in injury to an off train miner.

Other objectives were also achieved. The intrinsic safety design features of the personnel carried transceiver laid the groundwork for more advanced mine rescue and recovery communication systems. The vest transceiver also allows miners to safely work alone because emergency signalling can be used to summon help. The vest transceiver design holds promise for trapped or injured miner location. The system can also be used for wireless sensors that can both monitor and control equipment anywhere in the mine. Tests in deep shafts indicated that MF can even be used as a reliable hoist control and communications system.

An important human factor problem was solved by designing the personnel transceiver in a vest configuration. By placing radio circuit modules in pockets on the vest, the weight and bulk of the transceiver has been evenly distributed on the wearer. The vest contains a conveniently located hinged control head and integrated antenna. The light weight design allows the wearer to maneuver in tight quarters and perform normal mining tasks without interference. The vest transceiver output power is less then that

of the vehicular transceiver, 4 and 20 watts respectively. The vests are able to communicate almost anywhere in the mine with the use of specially designed repeaters which are easily installed. The system also features the use of narrow band FM and highly sensitive superhetrodyne receivers that achieve excellent noise and unwanted signal rejection. The use of common modules greatly simplifies the maintenance task in the mine.

SUMMARY OF PREVIOUS WORK

As early as 1922, Bureau experiments showed that radio propagation in mines was possible, but not practical. In 1948, an important contribution to underground communications was made by the Chamber of Mines of South Africa when they began programs to develop radio systems for deep mines, primarily gold mines. The result was that by 1973, an advanced 1 Watt single sideband (SSB) portable radio system had been developed. Although the SSB system was reported to work effectively in South African mines, its performance was not satisfactory in the highly electrified U.S. coal and M/NM mines. The Bureau's analysis of the underground radio communications problem indicated that further theoretical research was required to understand signal propagation mechanisms in underground coal and M/NM mines.

The Bureau's approach was to first determine the actual propagation characteristics of electromagnetic signals in

U.S. mines and then to relate the propagation characteristics to the underground environment such as the geology, entry size, and the effects of existing electrical conductors. Several exhaustive in-mine measurement and analysis programs were conducted. They formed the foundation for the first true understanding of how electromagnetic signals propagate in stratified geologies and down entryways in underground mines. Theoretical research and actual measurements in coal and M/NM mines indicated that the communication range was maximum in the MF band (300 kHz - 3 MHz) and peaks around 500 kHz.

Underground tests proved that electromagnetic signals in the MF band couple into and reradiate from continuous electrical conductors in such a way that these conductors become the transmission lines and antenna system for the signals. The existance of electrical conductors in the entryway provides the means for what is called the "tunnel mode" of radio signal propagation in an underground mine. Testing also showed that MF signals propagating on one conductor would, by magnetic induction, induce signal current flow on other nearby conductors. Thus all of the entryway conductors and the magnetic coupling mechanism between conductors provided a means of minewide signal distribution in an underground mine. Further Bureau testing showed that radio signal propagation was possible in "natural waveguides" (coal, trona and potash seams that are surrounded by more conductive rock) existing in certain layered formations. Because

of signal propagation in the waveguide (seam mode), communication links can be established through coal pillars and can be extended to the "working face" (the focal point of most mining activity). Testing also showed that signal propagation was possible around corners and through barricades in the mine.

Although Very High frequency (VHF) and Ultra High Frequency (UHF) leaky feeder communication techniques provided tunnel coverage, coverage in the face area of the room and pillar and longwall mines was not provided without deploying special cable into the working area. Since face areas are always advancing, deploying special cables is an impractical solution to the area coverage problem. By way of contrast, MF signals propagate well in tunnels as well as in coal seams thus providing a practical solution to the mine-wide radio communications problem in underground mines.

MF EQUIPMENT DESIGN

The MF communications system design was based upon prior fundamental research in MF. The equipment was designed to operate in both the tunnel and seam modes. For the tunnel mode, radio coverage to all vehicle and vest transceivers was provided by magnetic induction (inductively coupling) of radio signals into local electrical conductors. The electrical conductors include AC power cable, telephone cable, metal, water and air pipes, and wire rope. Base station

signals are coupled to the conductors via an RF line coupler (see figure 1-1). The coupler induces carrier current flow in the conductors which produces local magnetic fields. The mobile vest and vehicular transceivers communicate with the base via magnetic coupling to the conductors. The transceivers use tuned loop antennas to receive and generate the magnetic fields. The base station is centrally located in the radio coverage area. Passageway repeaters extend the operating range of the base station, vest and vehicular transceivers. RF line couplers are used to couple the repeaters and base stations to the conductors. The same repeater can be equipped with tuned loop antennas to radiate and receive seam mode signals as illustrated in figure 1-2.

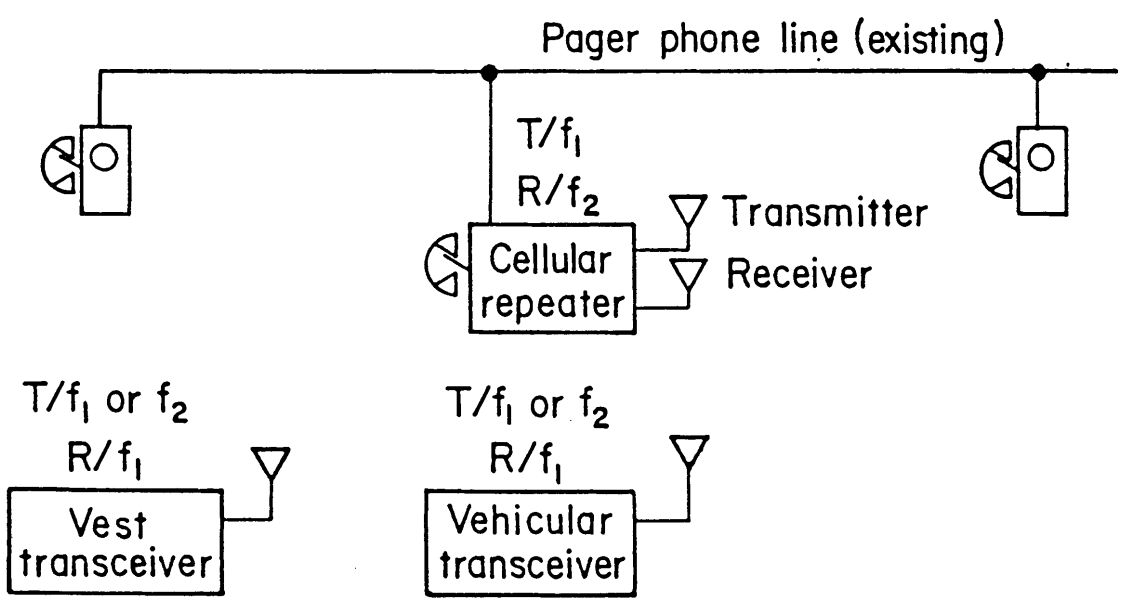

FIGURE 1-2. - The cellular repeater (seam mode).

Since the repeater services a "cell" (local working area) in the mine, it is called a cellular repeater. This repeater may be connected to the local pager telephone system to enable communications with other distant miners and with the surface communications center. When repeaters are used to extend the operating range, a second operating frequency is assigned to the radio system. A transmission frequency of F2 causes repeater action to occur. The repeater retransmits the message at the frequency of F1 (a high power signal). All receivers are tuned to the F1 frequency; base stations and the mobile transceivers are designed to transmit on F1 or F2 frequencies. A direct communications link between the base and mobile transceivers is created by a transmission frequency of F1; and repeater action extends the operating range by using F2 transmissions from the base or mobile transceivers. The repeaters are essential in large mines since they enable vest transceivers to communicate over ranges which are similar to the higher output power vehicular and base transceivers.

The system has been designed to operate on several selectable frequencies in the MF band. Separate communication networks (cells) can be set up by assigning a unique set of frequencies (F1 and F2) to each network which may independently serve the communication needs of maintenance, production, haulage and supervision. Additional networks are created by installing other base stations and repeaters. The base stations, repeaters and mobile transceivers are all

tuned to the assigned unique network frequencies. Because digital frequency synthesizers are used in the equipment design, it is possible for mobile transceivers to monitor and communicate with other networks in the mine.

FINDINGS AND CONCLUSIONS

Results of In-Mine System Tests

The MF communications system was installed and evaluated in four underground mines. The mines ranged in size from small (500 tons/day) to large (67,000 tons/day) capacity and represented several different mining methods. Two of the mines were medium sized coal mines (approximately 1 MTPY). These mines use continuous mining equipment to develop long-wall panels and belt haulage systems to transport coal out of the mine. The third mine was a small silver mine which uses the vertical crater retreat mining method. Diesel trucks haul approximately 500 tons of silver ore per day up a 7,000 foot long decline to the adit. The fourth mine was a large copper mine which uses the multiple level block caving method to extract 67,000 tons of ore (muck) per day. The mine uses an extensive rail haulage system to transport muck to the muck bins where hoists are used to lift it to the surface.

These mines offered an excellent opportunity to evaluate numerous aspects of the system's features in a wide variety of mining conditions. In-mine tests were conducted to

measure: (1) the MF signal carrier to noise ratio along the entire length of conductors in several entryways; (2) the signal attenuation rate of the MF signal along the conductors; (3) the receive and "talk-back" (transmit) range from mobile transceivers to the base station; (4) electrical and acoustical noise levels in the mine; and (5) receiver quieting. Additional experimental testing involved a simulated rescue and recovery operation and a simulated locating of a trapped miner.

Analysis of the in-mine test results showed that the MF communication system performed equally well in each mine. Because the performance was consistant and predictable in these mines, underground radio system engineering can predict performance in other mines. Furthermore, the in-mine evaluation showed that the system provided high quality radio coverage in most work areas and entryways with electrical conductors; the cellular repeater offers excellent coverage in the face areas of both continuous and longwall mining; "reach time" can be decreased from an average of 35 minutes (with the pager telephone system) to seconds; teamwork improves by allowing first hand information to reach key personnel in the mine; equipment downtime is reduced due to quicker communications between the production and maintenance crews; and safety and productivity are enhanced with the continued use of the system.

MF Communication Quality and Range

MF signals can be received almost everywhere electrical conductors exist in the mine. The talk-back range between a mobile transceiver and the base station or repeater depends upon the distance of the radiating antenna from the conductors and the type of nearby conductors. For radiating antenna-to-cable separation of approximately 7 ft, the vehicular to base communications range exceeded 30,000 ft along unshielded single-pair cables. At 520 kHz the attenuation rate was 2.4 dB/1,000 ft. It was only 1 dB/1,000 ft at 350 kHz. The range along the shielded 3-phase AC power cable exceeded 10,000 ft. At each point where the primary power cable connected to a power center, the signal loss increased by 8 to 12 dB. At 400 kHz, the attenuation rate was approximately 4 dB/1,000 ft. The vest talk-back range exceed 16,000 ft. In a layered formation like coal, the vest talk-back range includes adjacent conductorless entries for a distance of 5,000 ft from the base station. The seam mode radio coverage cell exceeded a radius of 500 ft. This provided an excellent communication link between a roving miner at the face and the cellular repeater at the power center.

The MF carrier to noise (C/N) ratio was measured at each base station in the four mines. The measured C/N ratio often exceeded 50 dB (30 dB above the good intelligibility level) when a mobile transceiver was a mile or more from the base

station.

In conductorless entryways, a low cost twin-lead cable was installed to extend radio coverage in one mine. One end of the cable was placed inside an RF line coupler to enable coupling to the entire cable. The cable provided excellent coverage in the entryway for the entire distance of the cable (more than 10,000 ft).

Additional in-mine testing of the communications range showed:

- Vest to vest communication range can exceed 11,000 ft in an entryway with conductors when the vest-to-cable distance was less than 7 ft.

- Vehicular transceivers, antennas and coupler used in hoist communications achieved a link C/N ratio of 60 dB.

- A vehicular transceiver can communicate with a vest transceiver for distances greater than 15,000 ft when the vest and vehicular antennas are less than 7 ft away from each other.

The acoustical noise levels near operating mine equipment are extremely high. Noise cancelling microphones and circum-aural ear cup speakers are required to maintain acceptable intelligibility levels in the speech channels.

Improvements In Vehicular Antenna Technology

A loop antenna featuring a twin-coil planar structure was developed and evaluated for use on vehicles. The antenna achieved high magnetic moment, a fundamental requirement for inducing high level carrier currents in nearby electrical conductors and was also highly sensitive in receiving low level magnetic signals. This antenna design offers the following advantages:

- The antenna has a self-resonant frequency of 2.8 MHz as compared to 1.5 MHz in the single coil.

- Because the twin coils are connected in parallel, the terminal inductance of the coil is less than a single coil antenna with the same number of turns. Thus, the transmitting twin-coil loop produces less electric field stress across the structural components. By way of contrast, a transmit single coil antenna can develop more than 5,500 volts across the coil when excited by a 20 watt transmitter. This can lead to electrical stress on the tuning components. Laboratory tests show that undesirable corona discharge effects in the antenna structure result from the single coil antenna.

- The radio frequency (RF) voltage of the twin-coil design is approximately 55 percent less than in a single coil antenna operating at the same magnetic moment.

The vest transceiver uses a single loop antenna for use in hazardous atmospheres. To achieve this, two design constraints were adopted. First, the stored energy within the antenna inductances and capacitances must be less than 0.3 x 10^{-3} joules. Second, localized electric fields developed in the structure cannot be of sufficient strength to cause corona discharge effects or dielectric breakdown in the antenna tuning elements.

Mobile Transceivers

The vest and vehicular transceiver designs were optimized for use with tuned loop antennas. Impedance matching networks were designed to maintain antenna tuning when the transceiver is receiving.

The MF transceivers are designed with highly sensitive superhetrodyne receivers. The receiver design includes filtering technology to reject unwanted signals and noise. This prevents unwanted signals from desensitizing the receiver.

The vest and vehicular transceivers have been designed to operate at a power level of 4 and 20 watts into 50 ohms, respectively. In the magnetic induction (inductive) communications system, it is the magnetic moment of the antenna that is important in determining operating range. These power levels produce a magnetic moment of about 2.0 and 6.0 ampere-turn-meter^2 in the vest and vehicular antennas.

RF Line Coupler Design

The RF line coupler is a tuned multiple turn toroidal (doughnut shaped) aircore current transformer which can be easily clamped around local conductors. In transmit mode the coupler provides efficient signal coupling to the mine electrical conductors. Since it is a tuned network, it is a preselector filter for the sensitive receivers used in the base station and repeater transceivers.

Cost/Benefit Analysis

Cost/benefit studies were used to determine the value of an MF system to underground mining. The cost with 20 transceivers, a base station, and repeaters will range from $50,000 to $80,000. A benefit analysis was conducted in a 1 MTPY coal mine, and it indicated that the radio sytem could reduce mining costs by 13 percent. This cost savings will represent a return of 2.6 times the initial equipment investment in the first year.

Other Important Uses of the MF System

The MF system performance has been evaluated inside a high-density concrete and steel nuclear reactor containment vessel, a large thermo-electric power generating station, and a fire fighting training structure. A large diameter loop antenna placed on the gangway inside of the containment

vessel was excited by a base station via an RF line coupler. In another series of tests, loops were placed around the outside of the electric power generating station and the fire fighting training structures. As in the containment vessel test, the loops were excited by RF line couplers. In these tests, commercially available handheld transceivers operating in the ultra high frequency (UHF) band and MF vest transceivers were compared on the basis of radio coverage. Although UHF transceivers performed well on all line-of-site paths, poor coverage existed in elevators, and behind steel reinforced walls. In contrast, MF coverage included these areas. The conclusion that can be drawn from this work is that MF inductive communications provides radio coverage where surface communication technology now fails.

II. DETERMINING COMMUNICATION REQUIREMENTS IN UNDERGROUND MINES

INTRODUCTION

The task of designing and introducing a high technology radio system in underground mining requires extensive organizational, marketing and economic research. The system and equipment design must achieve a balance between innovative technology and communication needs in mining.

This task was addressed for several reasons: (1) organizational theory research results are useful in determining how radio (increased information flow in the organization) can increase the effectiveness of the mining organization thereby making it safer and more productive, (2) market research determines the radio communication needs as perceived by the mining community as well as factors influencing the introduction of high technology radio communication products in the mining industry, (3) economic research was useful in determining the cost saving benefit of using rapid communications in all phases of the mining process. This work had two fundamental purposes. First, it involved the mining community in identifying its own communications requirements. Secondly, it insured that the system and equipment design would focus on solving communication problems with the greatest interest to mining. The research studies clearly identified how radio could improve safety and lower

mining cost. With this important background information, reliable design specifications were formulated for the system and equipment. The market-engineering research plan which was used in formulating the system and equipment design specifications is shown in figure 2-1.

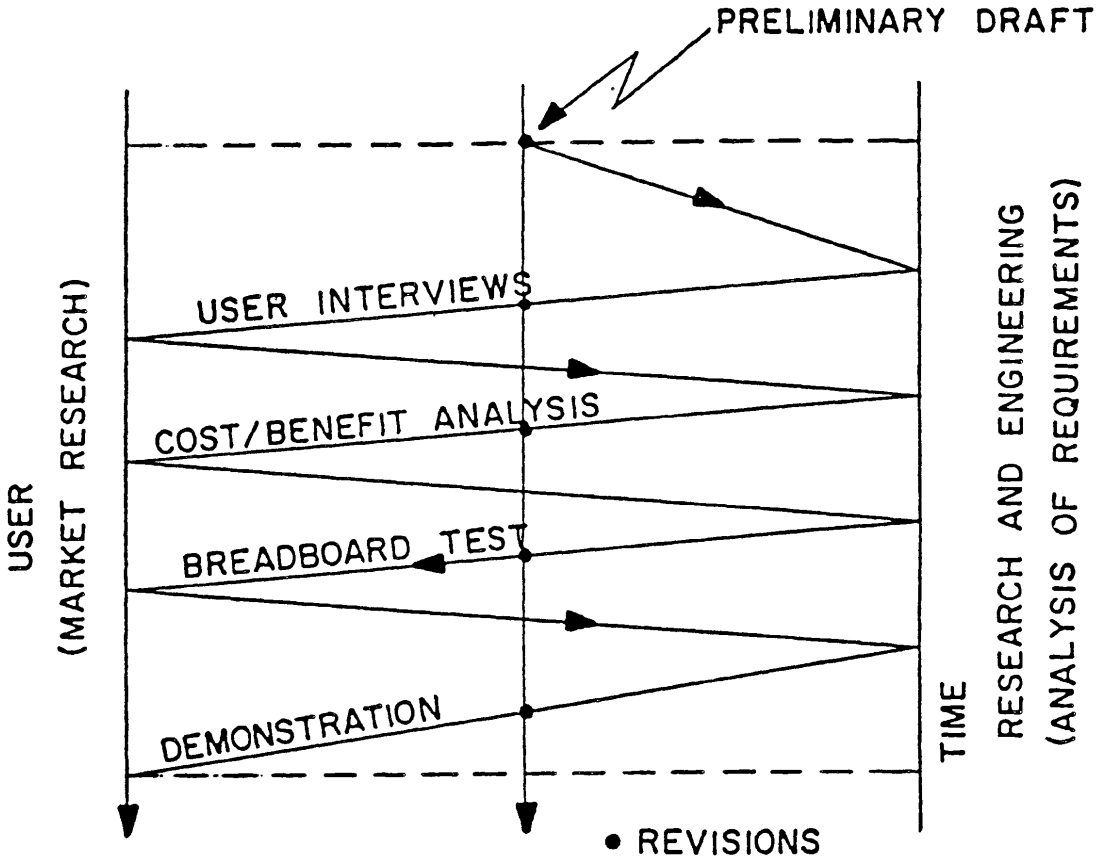

FIGURE 2-1. - Formulation of the system design specifications.

The process begins with the Research and Engineering (R and E) group formulating a preliminary draft of the system's operational specification. With the use of 35 mm slides of the system concept, mock-up models of personnel

transceivers, etc., the design was presented to various levels of management and operating personnel. During each presentation, mine personnel are asked to cooperate in making a forecast of the overall benefits of using radio, exploring safety issues and determining possible improvement production rates (tons/hour). With this information the R and E group was able to tailor the system's design to maximize benefits.

COMMUNICATION NEEDS

Communication systems in underground mines have remained relatively unchanged over the past two decades. It is interesting to observe that this occurred during a period of high technological change in extractive technology and equipment. The reason for this is threefold. First, management and mine equipment manufacturers understand that bigger and better automated mining equipment improves the machine component of productivity. Second, managers perceive that they have maximized the human component of productivity. Finally, most managers are not communications specialists, so they fail to perceive how radio can be a productivity multiplier.

Although the communication requirements in coal and M/NM mines are different, the following needs were found to be common in both types of mining:

- A radio communications link between the maintenance foreman and his crew so radio communications can be provided to the point of equipment breakdown or points of danger.
- Improved communications between key personnel to better coordinate the production task.
- Communication networks which can operate either dependently or independently of each other.
- Radio equipment which withstands the hostile mine environment and is not cumbersome to use.

ORGANIZATIONAL THEORY SUPPORTING COMMUNICATION NEEDS

The major factors which concern mine managers and engineers are productivity and safety because they realize that a safe mine is a productive mine. In the mine environment productivity and safety are greatly influenced by (1) the geological formation; (2) the mining process; (3) the type of mining equipment and its maintainability; (4) the attitudes of the work force; and (5) the effectiveness of the communication system.

When considering productivity issues, Pugh (1) states that managers tend to concentrate on three factors:

1. The application of advanced technology and improvement skills.
2. The organizational structure of mine operations.
3. Teamwork.

The first factor interests most managers. In order to keep informed of the latest technological advances, managers and engineers read trade publications and attend mining equipment shows. They also spend a great deal of time evaluating technological improvements in the mining process and relating them to productivity. The second factor is well developed in most organizations. In general, managers are able to organize the physical plant and processes for near optimum operations. The third factor, by comparison to the other two, is almost completely neglected. Yet, teamwork is important to productivity. This was proven by Mayo and Bavelas. Mayo (2) through his Hawthorne case study proved that a close relationship between the working group and management was a key factor in improving productivity. Bavelas (3), in 1948 , studied the link between communication patterns and the behavior of miners within "cells" (small working groups). The purpose of the work was to consider the psychological conditions that are imposed upon the group members by various communication patterns and the effects of these conditions on the organization and behavior of its members (4). The concept of centrality became the main determinant of behavioral differences because it reflects the closeness of a miner to other group members and the extent to which a miner is strategically located relative to his source of information. Individuals who could rapidly collect information were viewed differently than those to whom information was not accessible. The result

was decreased teamwork which lead to decreased productivity.

An organization's overall success depends on the balance of the three key productivity factors. The first two factors (technology and organizational structure) operate to make an organization effective; the third factor (teamwork) makes it efficient.

MINE ORGANIZATION

Mining companies are generally organized into pyramidal structures similar in many ways to those found in industrial firms producing a constant product over a period of time. An organizational chart for a typical mine is given in figure 2-2 .

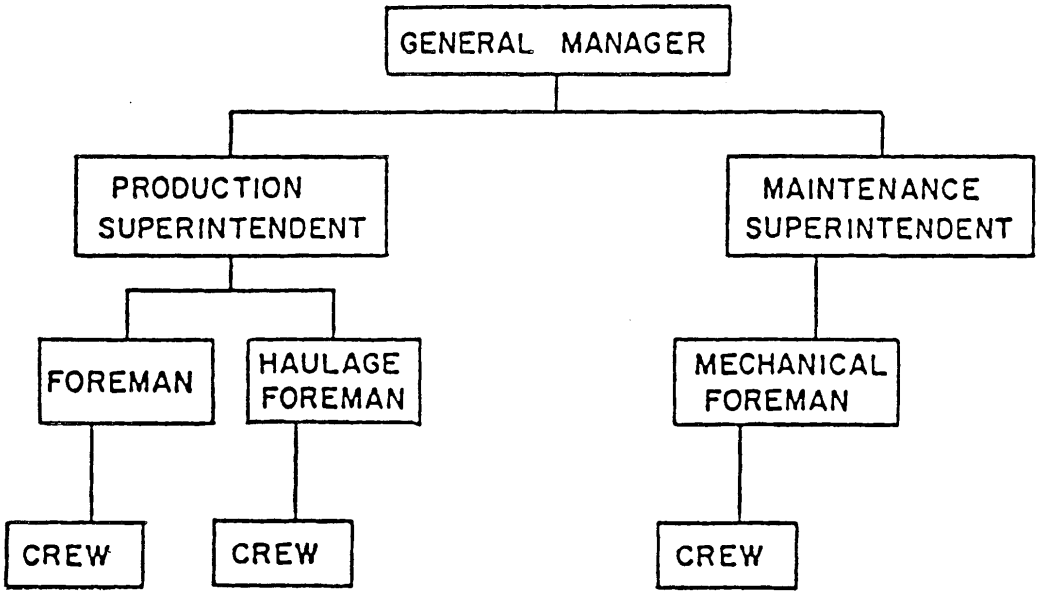

FIGURE 2-2. - Typical organizational chart.

The miners are organized into small semi-autonomous working groups (crews). Each crew is responsible for a specific task and located accordingly. For example, a production crew spends most of its time in the working section (face, stope, etc.), whereas a maintenance crew moves to various sections of the mine. Each crew is supervised by a foreman. The foreman works under a superintendent who coordinates and directs the mining activity. The organizational efficiency is measured in terms of product tonnage produced per man-shift.

INFORMATION FLOW

In present day mining organizations, information flows by several communication methods. At the beginning of each shift, the superintendent and foremen meet to outline the work task, objectives and priorities, then foremen relay vital information to members of their crews. During the working shift, the mine telephone system usually becomes the primary communications means. It is sometimes used to change crew members work schedules and priorities.

To obtain the highest possible level of productivity through information flow, it is important that centrality exists. This has been confirmed in the course of this work by observing group management activities during shift changes in several coal and M/NM mines.

In high productivity coal mines (greater than 25 ton/man-

shift), meetings were held at the beginning of each shift. The meetings included all superintendents and foremen belonging to the in-and-out-going shifts. Some of the crew members were also present. Members of the management team freely discussed problems encountered on the prior shift. The likelihood of the problems emerging again on the next shift were also discussed. By their presence, maintenance crews were made aware of possible problems. Repairs were scheduled to avoid production downtime. In one mine a "crash" vehicle containing emergency repair parts was stationed underground and used in emergencies by the maintenance crew. It was interesting to note that the face production crew on the out-going shift left the mining equipment in position to reduce start up time for the next crew.

In lower productivity mines, the meetings at the beginning of a shift were noteworthy in the sense that they tend to be "by chance" one-on-one encounters between the superintendent and his own foremen. Thus, lower centrality occurs in a low productivity mine.

Although management and other mine personnel have wished to use radio to improve the production rate, the pager telephone system often remained the only available communications resource. Lack of coverage in the mining complex was management's most frequent criticism of the system - timely messages needed for adequate coordination often fail

to reach keymen.[1] Roving miners were isolated from the information source most of the time thus becoming independent. The price paid for independence is low centrality and productivity.

Things do not have to be this way in underground mining. Radio can be used to increase centrality, replacing independence with synergism[2] in the working group. The availability of vital information, through the radio communication resource, will enable the miners to coordinate their activity and create a definite sense of "belongingness" in the working group and the mining organization.

BENEFIT ANALYSIS

In both coal and M/NM mines, production and safety are the key factors which are involved in a benefit analysis.

In coal, production depends largely on geological conditions and the availability of face equipment. Potentially more coal can be mined than can be transported out of the

[1]This is a key disadvantage of any pager telephone or carrier telephone system. That is, it is "station to station" not "person to person."

[2]Synergism - the cooperative action of individual working groups such that the total effect is greater than the sum of the two effects taken independently.

mine. The Jet Propulsion Laboratory (JPL) and others have extensively studied the effects of equipment downtime on productivity (5) (6). Their work shows that the downtime period tends to increase with the complexity of the mining equipment. Increased complexity also requires greater proficiency on the part of the maintenance crew members. In some mines, the proficiency of new maintenance crew members is suspect and repair burdens have been found to be shifted to others (skilled repairmen and supervisors). The average availability time of 35 continuous miners studied in the JPL work was 73 percent of the "face time" (production shifts less travel time). The availability of the longwall section was found to be near 76 percent. These figures exclude time lost to travel, scheduled maintenance, moving equipment, etc. Hence the availability is often less than 50 percent.

In most M/NM mines, production depends largely on the haulage system. It is the haulage equipment breakdown factor that tends to dominate productivity. The effect of mining equipment downtime on productivity is shown in figure 2-3.

Productivity is naturally lost during scheduled start-ups, lunch breaks and shift change activities. As figure 2-3 shows, unscheduled downtime has a significant effect on productivity.

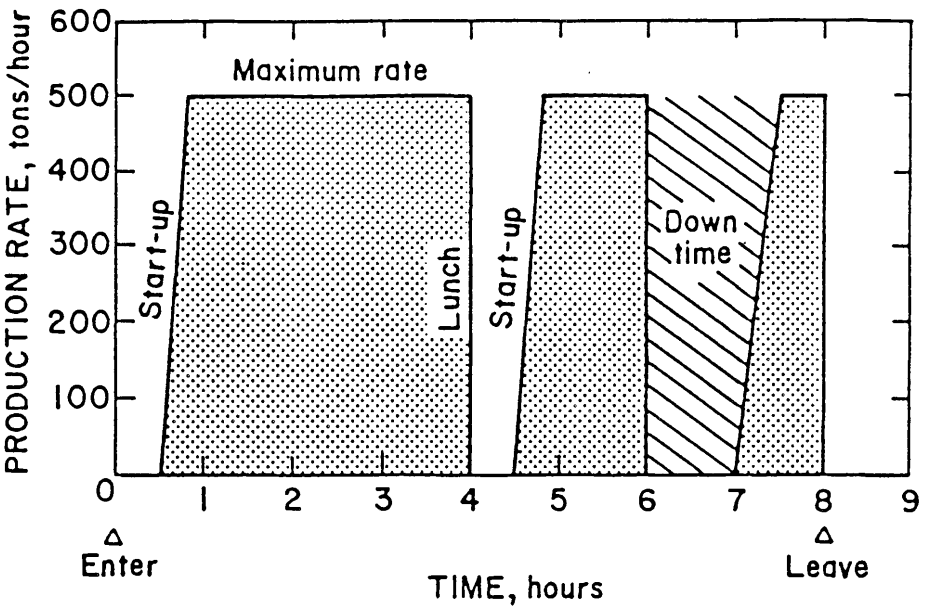

FIGURE 2-3. - Typical production profile.

The cost of downtime depends upon the failure point in the mining process. Downtime in a working section may range from a few thousand dollars per hour to tens of thousands of dollars per hour on the main haulageway system. Thus the MF system cost can be justified by saving only a few production hours.

Economic analysis conducted in coorperation with mine personnel indicates that the use of MF communication systems can enhance safety and productivity in the following ways:

1. Decreased reach time - Presently in both coal and M/NM mines it takes approximately 35 minutes to reach key

personnel with the pager telephone system.[3] With the use of radios, such as MF, reach time could be reduced from 35 minutes to a few seconds.

Reduction of reach time is especially important during mining equipment breakdowns since lost time means decreased productivity which could translate into a loss of thousands of dollars. With the use of the MF radio system, the communication needed between roving maintenance personnel and production foremen at the face or haulageway breakdown location could be significantly reduced.

2. Improved accuracy of information - Because of the lengthy reach time involved when using the non-radio system, critical messages are frequently relayed to keymen. Through this relay process keymen often receive inaccurate information which costs mines more than most realize. In many instances a wrong part is ordered from the warehouse or a part is delivered to the wrong location. Either way productivity decreases and repair costs increase. For example, in one mine's cleanup operation all the wayside litter was gathered and shipped out of the mine. It was later discovered that 75 percent of the litter was vital repair parts.

[3]This statistic was established by placing calls (paging) to mine superintendents and foremen and then measuring the reply time interval.

The use of MF radio eliminates the relay system of delivering messages since keymen can talk directly to each other. This decreases the probability of inaccurate information reaching the keymen, thereby decreasing the overall cost of repairs and downtime.

3. Increased centrality - The direct dial private line (star and branch networks) telephone systems have lead to decreased centrality in the maintenance group although supervisors may often prefer the private lines. In the private line system, messages tend to be directed to specific maintenance personnel. Whereas, in a party line communication system all members are aware of problems in the mine. Since each maintenance person is aware of the others' problems, they tend to cooperate in solving maintenance problems.

4. Reduces the probability of an accident occurring - Poor communications can cause serious accidents and fatalities in underground mines. Most mine accidents are the result of unexpected changes in the mining process. When unexpected changes occur, miners are frequently exposed to hazardous situations. Studies of incidents relating to accidents reveals that improved communications would have prevented many accidents. For instance, an off-train-man expects the train to move forward but instead it moves backward and seriously injures the snapper. The hoist cage was expected to go up, but instead proceeds downward and

strikes a maintenance man. A radio link in these cases would greatly increase safety.

5. Increased efficiency in mine rescues - In the event of a mine disaster such as an explosion, cave-in, fire, etc., where miners may be trapped underground, efficient rescue efforts are essential. Rapid and efficient operations not only enhance the possibility of achieving a successful rescue, but also reduce the risk to the rescue team.

Teams equipped with personal MF radios can greatly enhance mine rescue. In practice, rescue teams from surrounding mines cooperate during a disaster. To insure communications compatability among rescue teams, a common national rescue frequency (415 kHz) can be assigned. To insure that the rescue radio equipment will be properly maintained, the rescue radios can also be used in the maintenance net.

6. Improved communications technology in hoist systems

In deep shafts, electronic equipment in cages is subjected to high vibrations, rapid temperature change, and condensation. All these factors degrade the reliability of the existing carrier current radio equipment. With an MF system the antennas or couplers are capable of efficiently using the wire rope signal transmission medium. A base station and antenna can be located at the collar or in the hoist room. This enables the surface MF equipment to operate in a less harsh environment. It also permits maintenance to be

performed at ground level, thus reducing the chance of an accident occurring. The improved RF line coupler greatly increases the signal coupling efficiency to the wire rope which in return allows for excellent communication in the shaft. By way of contrast, the existing shaft communications requires mounting the antenna on top of the hoist next to the sheave wheel; this increases the probability of having equipment damaged.

7. Improved coordination of underground mining activity - In coal mining the transportation of supplies must be coordinated with production needs. The foreman must be able to communicate with service vehicle motormen to insure timely delivery of supplies; he must also be able to adjust the production rate to match the belt haulage rate. In vertical crater retreat (VCR) and blockcave mining processes, it is necessary to coordinate haulage and mucking operations which occur at different levels of the mine. If the production foreman can be made aware of "full" transfer raises or draw points mucking can be efficiently directed.

As a practical matter, roving mucking and production foremen cannot use telephones to efficiently coordinate haulage. Use of MF radio is expected to increase haulage by five percent since it allows for communication between different levels of operation, person to person.

By considering the seven factors above, the radio productivity multiplier for any mining organization can be determined. Table A illustrates the expected production improvement when using an MF system in a medium sized coal mine. Line item B shows the average face production and belt haulage in a typical one million ton per year (1MTPY) mine. The data follows from actual production statistics (prior 12 months). Line item C shows the downtime cost in tons/hour. In coal and M/NM mining, haulageway disruption is exceedingly expensive. The expected production increases due to the use of MF radio is shown in Line item D. It is assumed that equipment breakdowns will occur in at least one section during a shift. Product flow along the haulageway will be disrupted. Radio will eliminate the keypersonnel reach time (35 minutes) associated with each production disruption.

Face and haulage system production rates can increase as shown. Use of MF radio by supervisors is expected to increase mining efficiency by five percent. The radio productivity multiplier for a one million ton/year (1MTPY) coal mine significantly increases productivity by 13.5 percent (135,000 tons/year).

The expected return on investment is noteworthy. The cost of the radio equipment including maintenance and replacement cost is approximately $53,900. Assuming a $35/ton revenue

TABLE A. - Productivity Multiplier Work Sheet.

	Example	Mine Forecast
A. Actual Production Statistics		
Annual Production (tons)	1,000,000	
Production Days	250	
Shifts Per Day	2	
Operating Sections	6	
B. Production Tonage Per Shift		
Each Face	333	
Haulageway		
Feeder	333	
Main	2,000	
C. Downtime Cost Per Hour (Tons/Hour)		
Face	42	
Haulageway		
Feeder	42	
Main	250	
D. Increase In Production Per Shift (Tons/Shift)		
Reduced Breakdown Time		
Face	25	
Haulage	146	
Better Coordination	100	
Total	271	
E. Increase In Production (Per Year)	135,500	

with a three percent operating margin, the first year return on investment is about:

$$ROI = \frac{\$141,800}{53,900} = 2.63$$

The cost of the equipment can be recovered 2.63 times in one year. The present value (PVi=12%) of the five year production increases are:

$$(3.61) \times \$141,800 = \$511,898.$$

The above productivity and financial analysis are conservative in the sense that safety enhancement expectations were not included. Poor communications is a factor in many accidents. Cost includes damaged equipment, disruption in the mining process, and most of all, the loss of an injured employee's services. It is not unreasonable to expect an even greater ROI.

III. DESCRIPTION OF THE MF RADIO COMMUNICATION SYSTEM

INTRODUCTION

The philosophy of the MF system is illustrated in figures 3-1 and 3-2. Figure 3-1 shows the radio coverage areas (cells) possible and figure 3-2 shows how existing mine conductors (the wireplant) are used to carry and radiate the MF signals throughout the mine.

Existing conductors in entryways provide a means of distributing the MF radio signals in the mine. These signals can be transmitted from one connected set of conductors to another via inductive coupling. These conductors (called a wireplant) include electrical power cable, control lines, telephone cable, metal water and air pipes, etc.

Signal coupling to the wireplant occurs when the transmit antenna produces a "near" magnetic field (H_1) signal that is intercepted by the wireplant. The signal magnetically couples to the wireplant inducing current flow which produces a local magnetic field (H_2) as it travels (propagates). At a distant location, the local field inductively couples the MF signal to an antenna or line coupler associated with a receiving transceiver.

Inductive coupling of signals into existing mine conductors is necessary to insure extensive radio coverage. Because of magnetic coupling and the existing wireplant, usually no special communications cable need be installed.

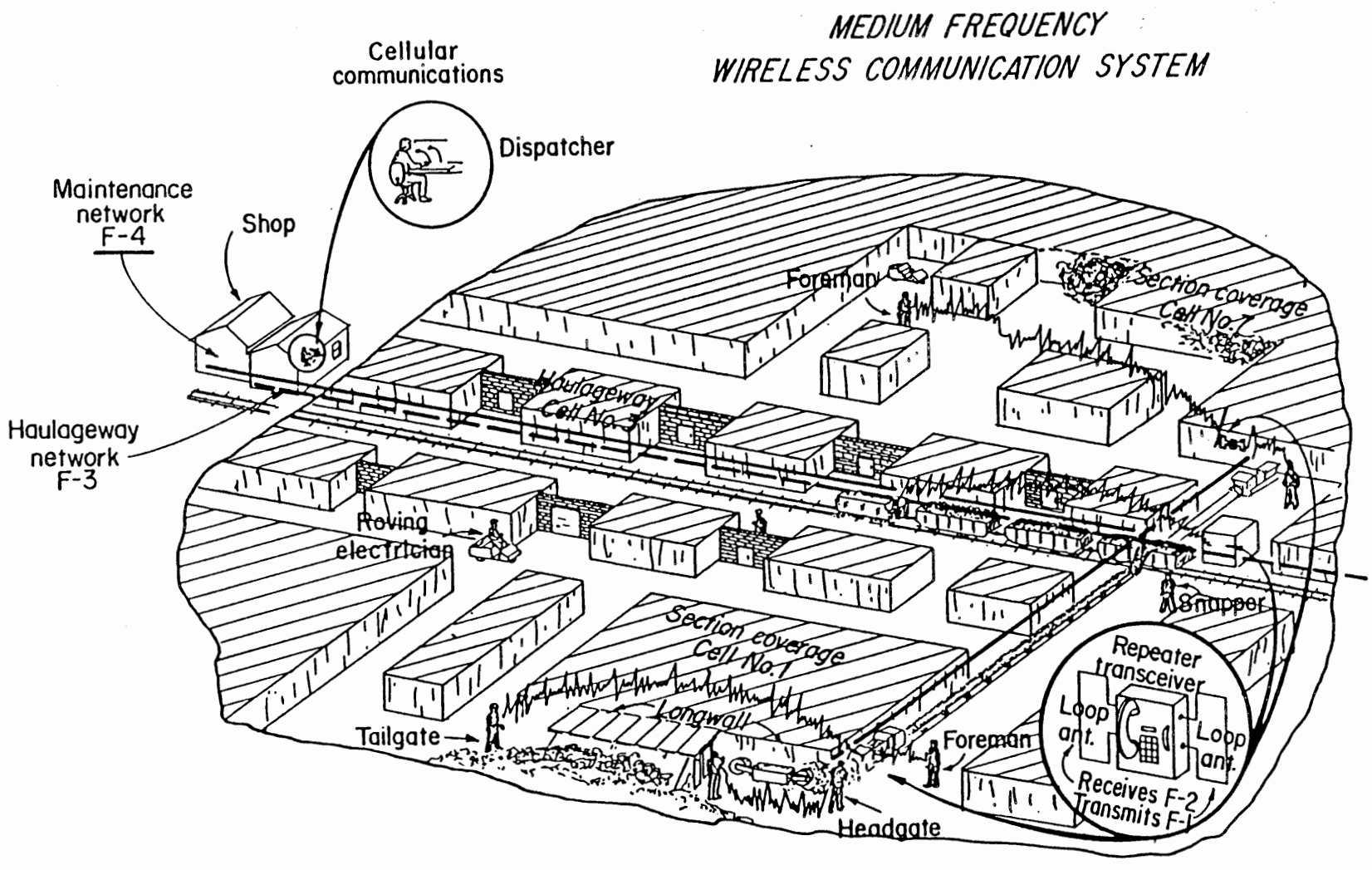

FIGURE 3-1. - Radio coverage cells.

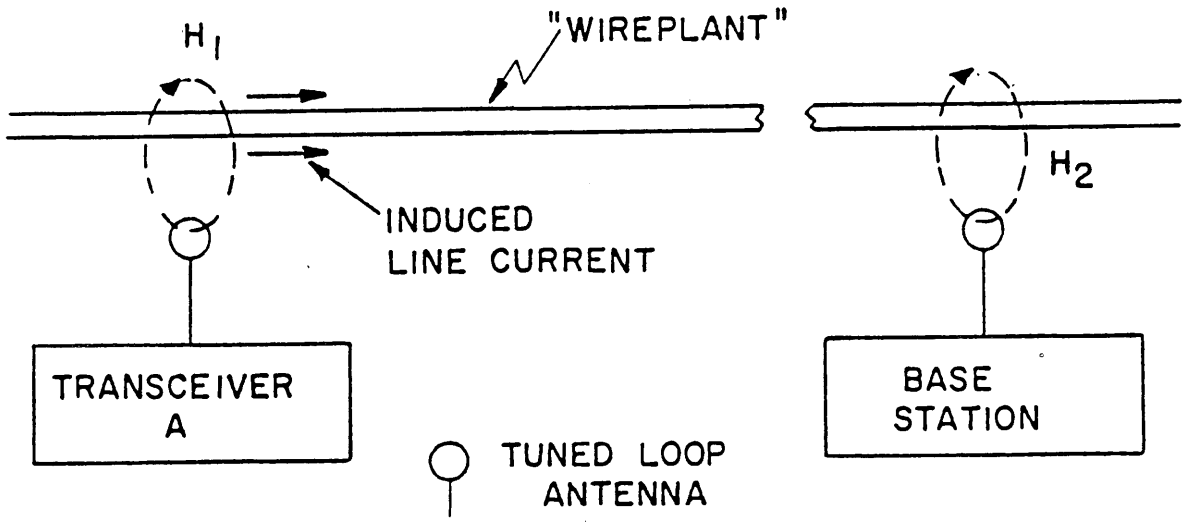

FIGURE 3-2. - Coupling of electromagnetic signals to electrical conductors.

Signals can also be coupled to the wireplant conductors with RF line couplers. Like a current probe, RF line couplers can be easily clamped around electrical conductors where they induce a greater amount of line current than that produced by an antenna. In fact, couplers increase the operating range by miles.

Base stations and repeaters, as previously illustrated in figure 1-1 enable roving miners wearing mobile transceivers (vests) to communicate great distances. Base stations can be controlled remotely by a single pair of conductors connected to a control console. The control console can be placed in a surface building for convenience, and the base

transceiver is placed in the mine where it can more effectively couple signals to the wireplant. The global repeaters are used to extend the system's operating range in two ways: (1) by transmitting on frequency (F2), the base is able to access the global repeater and reach a distant mobile transceiver, and (2) by transmitting on frequency (F2), a mobile transceiver can access the repeater and reach a distant mobile transceiver.

The system may also use repeaters to increase the range between mobile transceivers in the face area of a coal mine. This type of repeater is known as a "cellular repeater" because it illuminates only a "cell" or area of the mine. A distinguishing feature of this repeater is that it uses longwire loop antennas to excite both local conductors and the coal seam propagation mode in the working area. The antennas used are dual-loop antennas (for transmitting and receiving) attached to the rib or posts. The transmitting and receiving antennas are similar; both produce a large magnetic moment that provides the signal for local cellular coverage which is usually aided by local inductive coupling effects. The repeater can be connected to the section pager telephone system just like a pager phone. Wireless signal paths exist between the section repeater and roving miners. Figure 3-3 illustrates the mobile telephone nature of the working section communications system when configured in this manner.

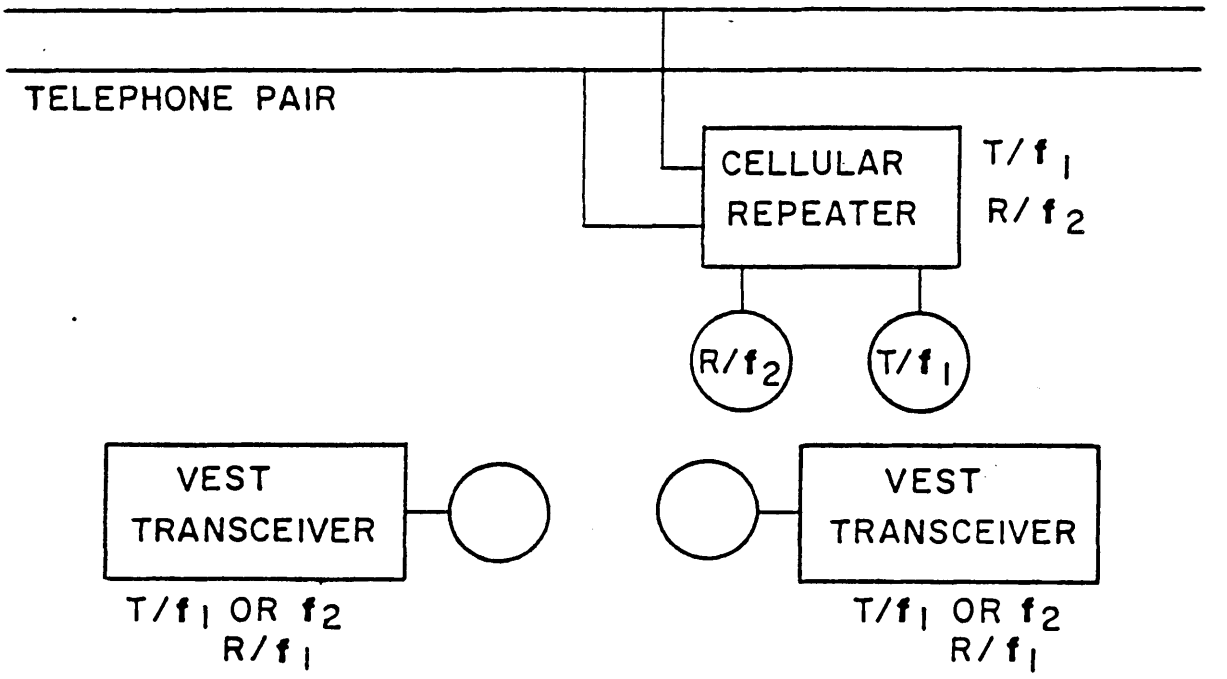

FIGURE 3-3. - Vest radio communications with the telephone network or other distánt vest transceivers via the cellular repeater.

The personnel transceivers utilize a unique vest concept that is convenient to wear and permits excellent communication from almost anywhere in a mine. Miners (production foremen and maintenance crew) can wear vest transceivers to communicate with the cellular repeater. The repeater transmits the telephone message to other vests using frequency (F1). The vest transceivers are tuned to receive the frequency (F1) and are able to create a local mobile-to-mobile network by transmitting on (F1). The vest transceivers can

also transmit on (F2) in order to access the cellular repeater and communicate with the pager phone network. In this instance, the cellular repeater enables the vest transceiver (using F2) to reach a distant vest transceiver in the working area by repeater action.

The vehicular transceiver is connected to a tuned loop antenna of advanced design enclosed in high strength Lexan[4] to protect it. The transceiver is connected to the vehicular power by power cable.

MF ARCHITECTURE

The architecture of the whole mine radio communications system is shown in figure 3-4.

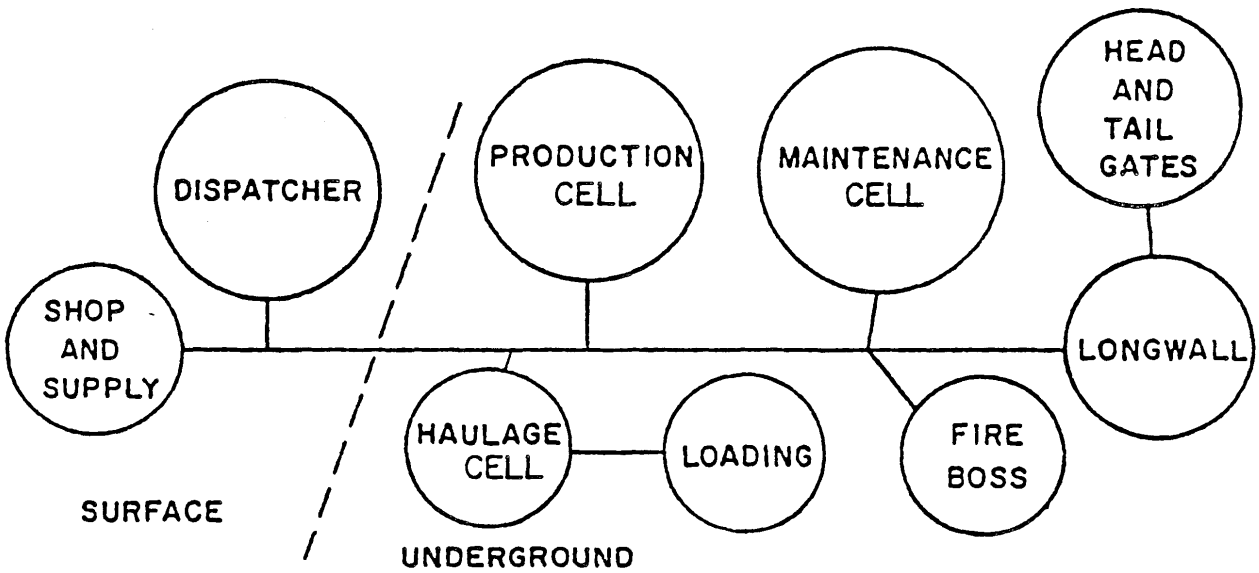

FIGURE 3-4. - MF system architecture.

[4]General Electric trade name for polycarbonate.

The MF system was architectually designed following the recommendations of Bavelas (3). Cells of radio coverage were created by assigning a specific frequency to the radio equipment within each working section. The cells are designed so roving miners within a working group can communicate in a party line sense, thus allowing every miner within the group to receive the same information. The cell's coverage overlay each other in such a way that messages in one cell are not heard in other cells, yet the cells can be interconnected to permit the flow of information throughout the organization.

The maintenance cell extends from the point of equipment breakdown to the surface shop and supply areas. The haulage cell covers the loading and dumping areas and the haulageway; this allows motormen (drivers) to communicate with the dispatcher and off-train men. The maintenance cell extends throughout the entry drifts and face area. The production cell includes coverage of the work area and entry drifts so key production personnel can coordinate haulage of critical supplies and production products (muck, coal, etc.). In most mines, the maintenance and production cells can be merged into a single cell so that production supervisors can communicate with maintenance supervisors.

EQUIPMENT

The MF equipment was designed for "near" magnetic field communications and is divided into mobile and fixed location catagories as shown below:

Mobile

Vest Transceiver
Vehicular Transceiver

Fixed Location

Base Station
Global Repeater
Cellular Repeater

Coupling Devices

RF Line Coupler
Antennas

Mobile Transceivers

Two types of mobile transceivers have been developed: vest units for individuals and vehicular units for vehicles. Functionally the two are identical differing only in output power levels and physical configuration.

Vest Transceiver

The vest transceiver has been designed for operation in gassy atmospheres (CFR, Title 30, Part 23-Telephones and Signalling Devices) and is shown in figure 3-5.

The vest transceiver features a set of plug-in modules which are sewn into the vest garment. A tuned loop is sewn into the back of the vest so the loop can be retained firmly thereby keeping its area constant to avoid detuning during use. The vest is supplied with nickel-cadmium battery packs. Sufficient capacity is provided in the battery pack for eight hours of normal operation (90 percent of the time in receive and 10 percent of the time in transmit).

Sound is directed toward the ears from epaulet speakers on each shoulder. A hinged "control head" (a flip-type device which contains all the necessary controls - on/off, volume, squelch, etc. - and the microphone) is conveniently attached to the vest at the top/front. Figure 3-6 illustrates the control head.

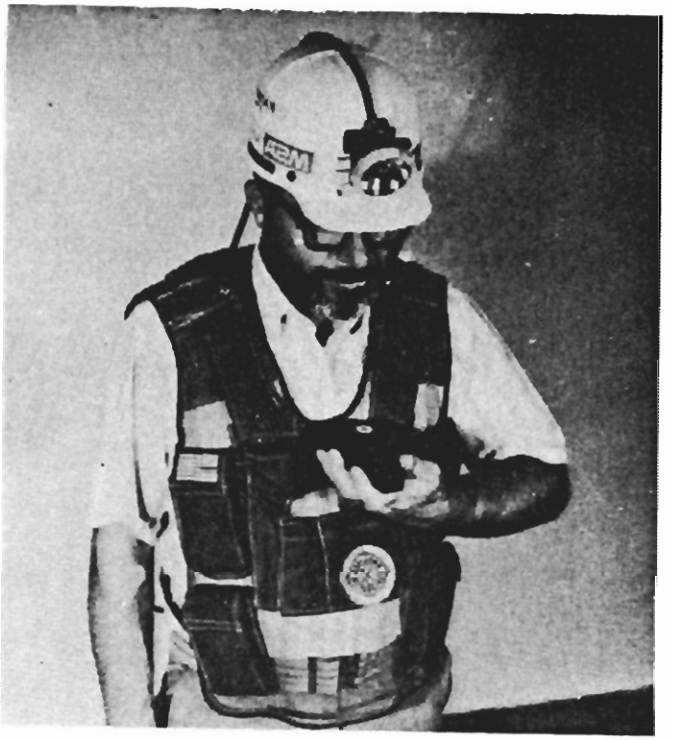

FIGURE 3-5. - Vest transceiver.

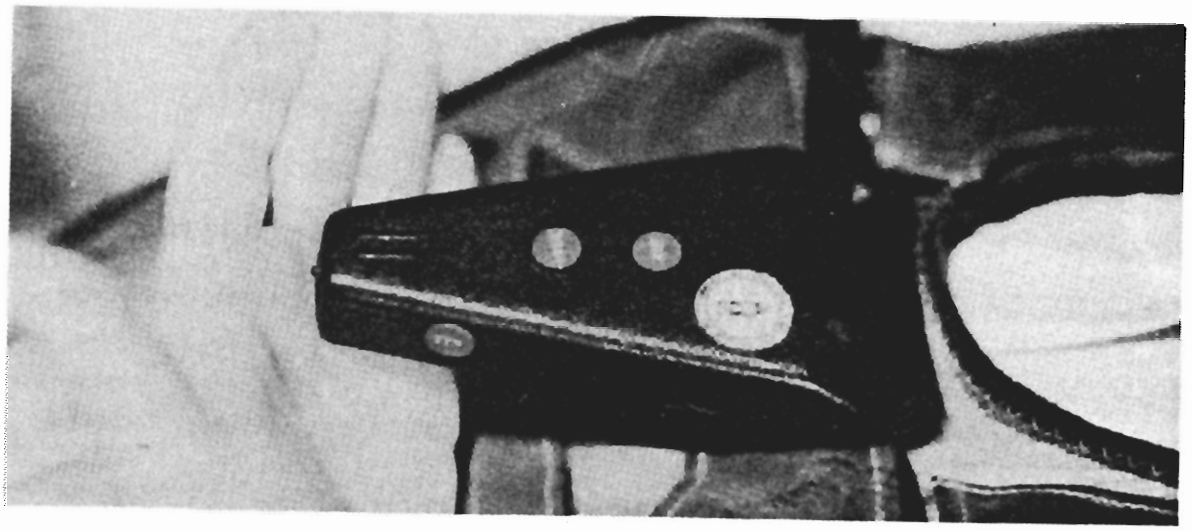

FIGURE 3-6. - Control head.

The vest transceiver can be used to communicate with other mobile units by depressing the push to talk (PTT) switch which keys the vest transmitter to produce the carrier signal frequency (F1). By speaking into the microphone, the voice message frequency modulates the carrier. Depressing the signalling (signal) button modulates the transmitter with a 1,000 Hz audible tone. This can be used for emergency signalling in the event that a miner is unable to speak.

The cellular repeater design includes switching circuitry to allow the vest to operate like a mobile telephone. Depressing the paging (page) switch keys the vest transmitter to the carrier frequency (F2). This signal is modulated with a 100 Hz subaudible tone. The tone signal is decoded in the cellular repeater causing the vest voice signal to be switched onto the local pagerphone network. The pagerphone

network can key the repeater to the carrier frequency (F1) for return message transmission into the radio coverage cell.

An important human factor problem was solved in the vest design. By distributing the bulk and weight of the transceiver of the vest, the radio becomes an integral part of the users garment (7). He is free to move in tight quarters and perform normal mining tasks without catching the radio on obstructions.

Vehicular Transceiver

The vehicular transceiver is shown in figure 3-7. The transceiver includes a control head which enables the user convenient access to the microphone and volume control. It is connected to an advanced design tuned loop antenna which is enclosed in high strength Lexan to protect it from being damaged in the mine environment.

The vehicular transceiver is connected to the vehicle's power by power cable to permit operation from the vehicular electrical power system. The antenna, control head and vehicular transceiver are designed with mounting brackets (that include weld bars) for easy mounting on most vehicular equipment.

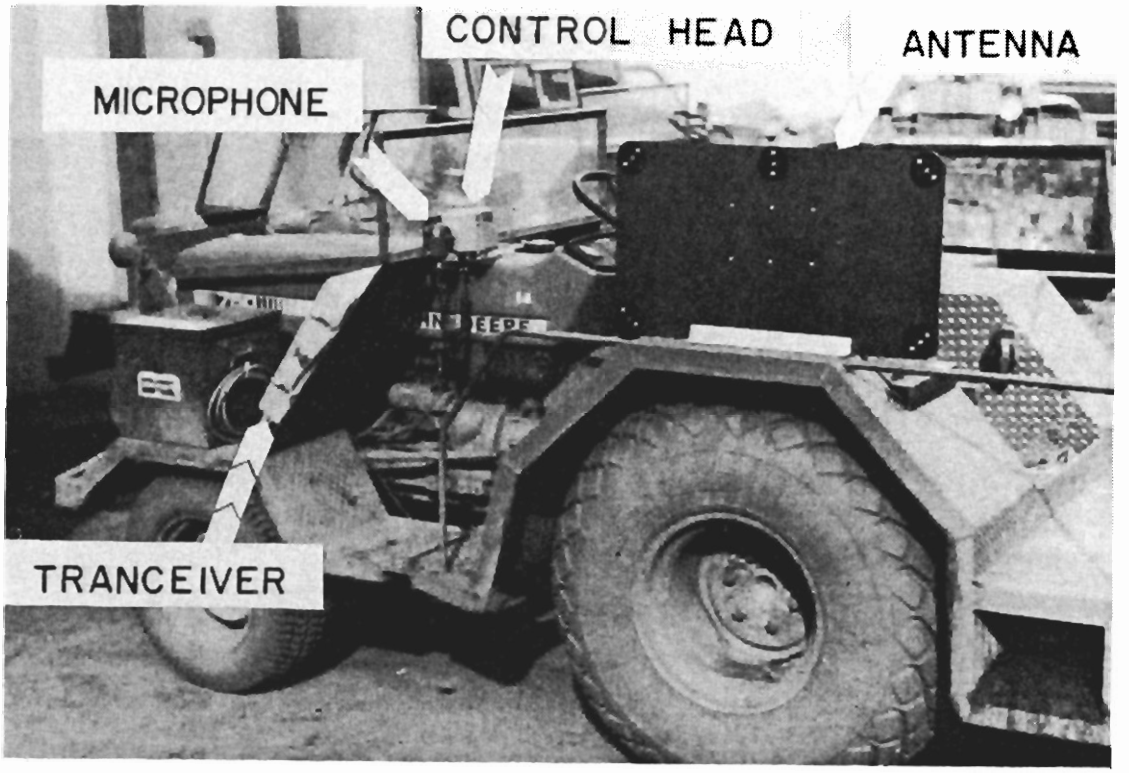

FIGURE 3-7. - Vehicular transceiver.

When mounting the antenna, control head and vehicular transceiver, the following are important:

- Observe the color codes where the black wire is connected to the positive supply voltage and the white wire is connected to the ground.
- Mount the cables in a way which best avoids abuse.
- Mount the vehicular transceiver where it receives some protection.
- Mount the antenna horizontally or vertically.
- Mount the control head in a convenient location.

Fixed Location-Repeaters

The global and cellular repeaters are identical. They can operate with RF line couplers (as illustrated in figure 1-

1), or with antennas (as illustrated in figure 1-2), or as part of a pager telephone system (as illustrated in figure 1-2).

The receiver section of the repeater demodulates the received carrier signals (F2), recovering the base and F2 message and the 100 Hz subaudible tone. The recovered message signals may be used for two purposes. First, the message signal keys the repeater's transmitter section to produce a high power retransmission signal at the F1 frequency. The message appears as FM modulation on the F1 signal. Second, when the subaudible tone is present, the repeater decodes the 100 Hz tone and switches the message to the mine telephone network enabling telephone communications. The repeater design includes filter networks to prevent receiver desensitization.

The repeaters and the base station can be operated from remote control console(s) which can be located anywhere in the mine. A pair of wires connect the console to the repeater as shown in figure 3-8.

Multiple Remote Control Console (RCC) units, base stations and repeaters can be connected to the Remote Control (RC) cable (wire pair). The maximum control signalling distance over the RC cable is 5 miles. The RCC unit is shown in figure 3-9.

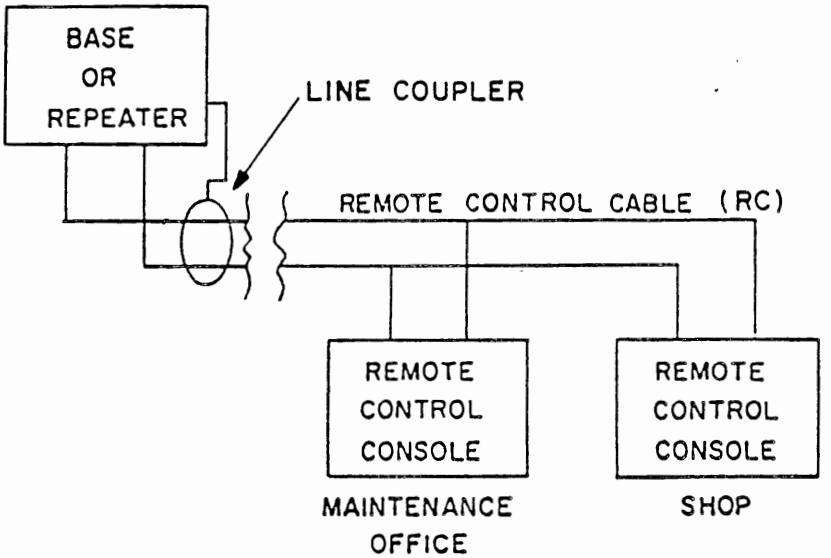

FIGURE 3-8. - Remote control.

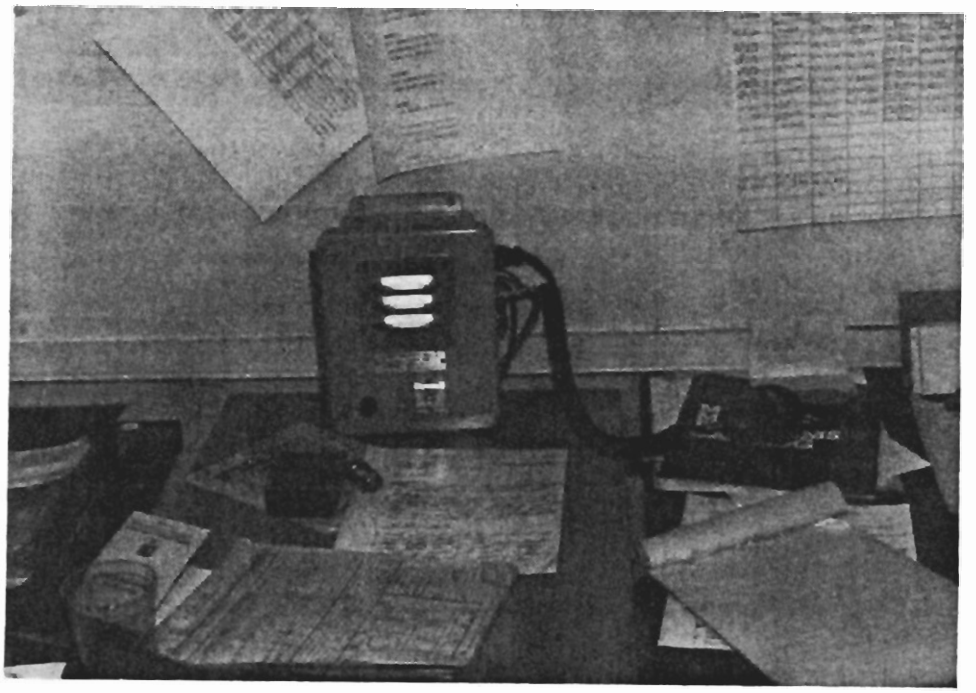

FIGURE 3-9. - Remote control console unit.

Base Station

The base station permits communication with mobile radio equipment via the RF line couplers and the mine's electrical conductors.

The base station is illustrated in figure 3-10. It includes an RF line coupler, remote control console, non-interrupted power supply, and a standard vehicular transceiver. The non-interrupted power supply includes an AC to DC converter and standby battery. The supply is located in areas of prime AC power to enable changing of the batteries. The base station uses the vehicular transceiver and remote control console.

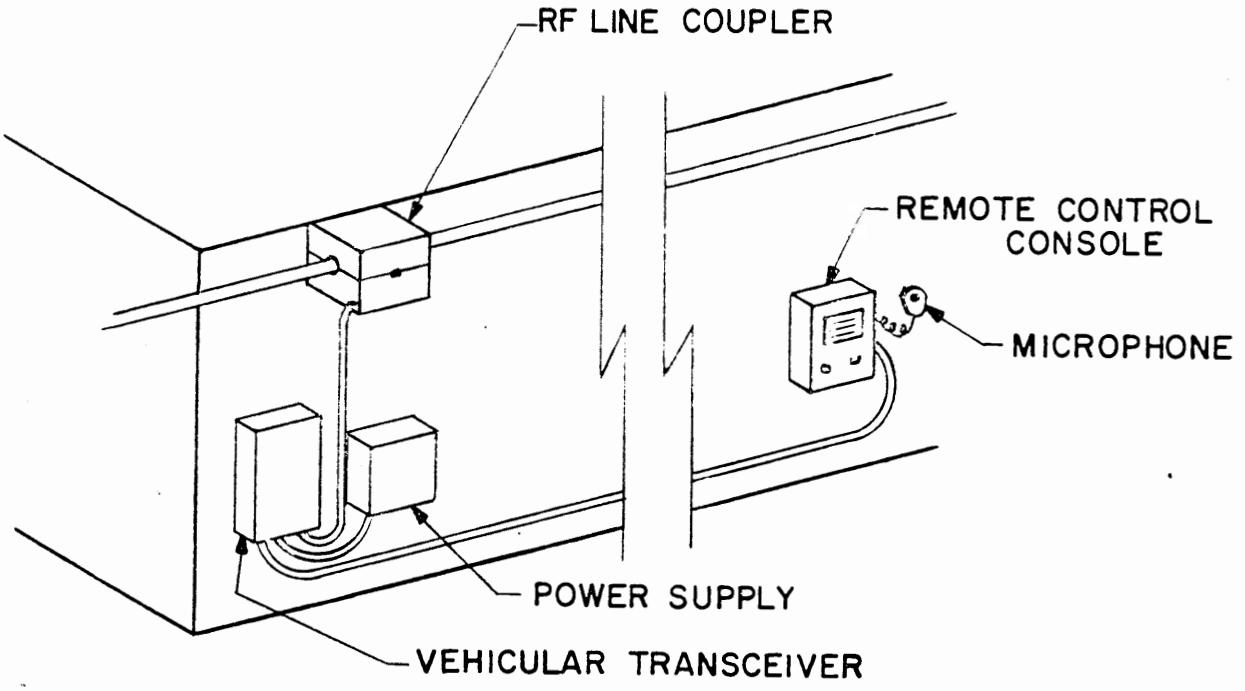

FIGURE 3-10. - Base station.

Coupling Devices

The coupling devices used in the system include RF line couplers, and tuned loop antennas.

RF Line Coupler

The global repeater and base station are designed to drive and receive signals from RF line couplers. The couplers are air core torroidal current transformers designed to easily clamp around electrical conductors with outside diameters of 1, 4 and 7 inches.

Antenna

The cellular repeater and vehicular transceiver use tuned loop antennas to transmit into the work area or to induce current flow in nearby electrical conductors. The tuned loop antenna is illustrated in figure 3-11.

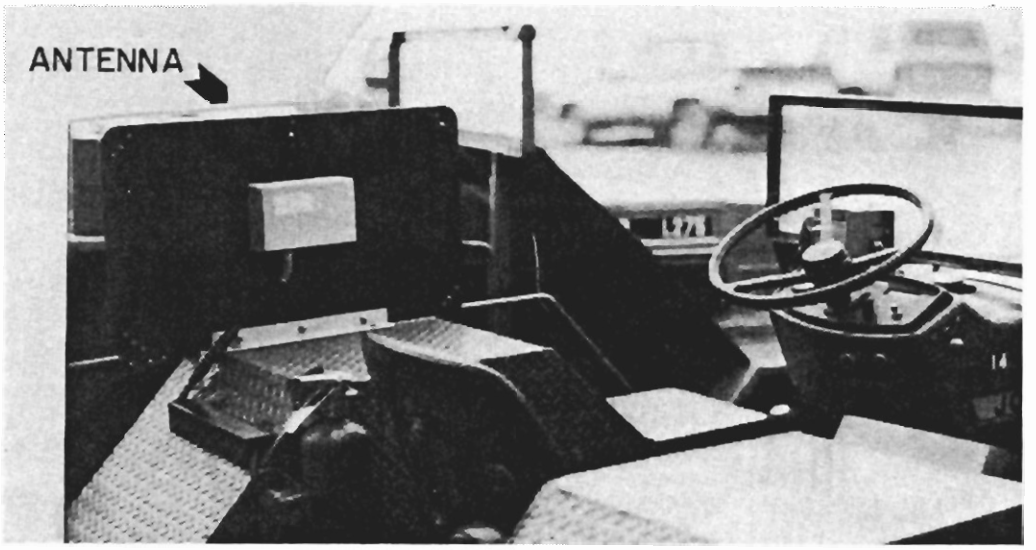

FIGURE 3-11. - Tuned loop antenna.

The antenna may be mounted on a vertical or horizontal mounting surface; however, to avoid undesirable influence of nearby metal surfaces, the antenna should be mounted at least 6 inches away from metal surfaces.

MF INSTALLATION

The MF radio communication system features installation versatility as well as simplicity and reliability in actual operation. The system has been successfully installed and demonstrated in four underground mines listed in Chapter VII. These four mines are representative of the mining processes commonly used in the U.S. In the course of the installation work, various problems were encountered and solved, a few of which were:

- Physical space problems when mounting larger vehicular antennas to certain types of mobile mining equipment. Smaller antennas were made to facilitate such installation requirements.
- The damage of cable. When possible protection was provided.
- Highly reflective paint on the vehicular antennas tended to blind the operator in areas of darkness so the antennas were painted with a dull finish.

Preinstallation guidelines have been developed for easy, successful installation of the MF system. The guidelines will be described in Chapter IV.

IV. PREINSTALLATION PREPARATIONS

INTRODUCTION

The ultimate goal of any communications system is to make underground mining safer and easier without reducing the productivity of the mining process. To achieve this goal it is important that the installation of a communications system be well planned in advance. This section describes the preparations which should be followed before an MF system is installed in order to assure the system will work to its full potential.

INITIAL RADIO SYSTEM PLANNING MEETING

The primary goal of the planning meeting is to involve management and other personnel, at the earliest possible time, in understanding the principles and features of MF communications. The material presented in Chapter III is an overview of the MF system and serves as the briefing handout for the meeting; mine personnel should read the handout before attending the meeting. This material will acquaint them with the communication system so they may help identify areas where radio communication can reduce mining costs and increase safety. The expectation of cost reduction can be developed for the mine by preparing a cost/benefit analysis similar to that developed in Chapter II.

The analysis should be used to pinpoint communication needs with the greatest payback potential in the near term.

The meeting should also address the concerns of the work crews and establish the communication requirements for the entire mine. These requirements should be broken into near and far term objectives. The near term should concentrate on only as much equipment as necessary to provide the maximum benefit to the mine. The equipment costs of this system should be recovered in the first few months of operation through savings in production cost. The far term objectives should be more general.

DEFINING COMMUNICATION NEEDS

In considering where communication is needed, it is important to remember that a safe, smooth running mine has good communications in all work areas and frequently traveled passageways, and insures that all foremen can easily communicate with each other.

When determining a mine's communication needs, the following questions should be considered:

- Who must communicate (net together)?
- Will communications be required from vehicles?
- Will communications be required from roving miners?
- Will communications equipment be given to miners that work alone?

- How many independent communication networks are needed for near and far term objectives?
- What type of mining problems can be solved with good communications?
- Will a communications center be established?
- How can the system be used to improve safety and reduce mining costs?
- Will the mine be willing to commit resources to the maintenance and well being of the system?
- What type of communication system is needed?

The answers to these questions will establish the basic communications requirements for the mine.

SELECTING NEEDED NETWORKS IF MF RADIO APPEARS TO BE THE SOLUTION

If MF is selected, the following networks should be considered for use in a mine's communication system:

Supervision Network
Maintenance Network
Production Network
Haulage Network
Hoist System Network
Emergency Network

Maintenance and Production Networks

Since miners often prefer party line to private line communication networks, some of the networks will merge

together. For example, the maintenance and production networks can be operated as a single network to improve teamwork and the supervision network can be operated as a single network for management which prefers to have a private channel.

To establish the network, vehicular transceivers should be installed on all service and foreman vehicles and vest transceivers should be assigned to keypersonnel who are frequently on foot during the course of their work. This enables keypersonnel to maintain close contact at all times. The base station should be installed near the center of the radio coverage area, and the underground base remote control unit(s) should be located in the shop, warehouse, and supervision (production and maintenance) offices. A remote control console(s) should be installed in the dispatcher's office or communications center.

In very large mines, a separate supervision network may be considered for the transmission of sensitive information (safety matters, accident prevention information, labor matters, etc.). In some mines, a direct dial pager phone system serves this communication need.

Hoist and Haulage Networks

Hoist and haulageway communications networks are important in reducing the chances of accident and serious injury in mining. To avoid accidents, information must be instantly

available and non-confusing.

In haulageway networks motormen should receive only rail traffic information and be able to communicate with off train men. To achieve this a separate base station and set of operating frequencies should be assigned to the haulage-way network.

Vest transceivers can be assigned to all off-train men (loader, snapper, chute tappers, etc.) and shaft inspectors. In larger mines, the dispatcher's office is the communications control center for the haulage networks. The base station remote control console centers are usually located in the communications center. In small mines, the haulage communication systems are most efficiently self-dispatched. In belt haulage systems, beltmen can be assigned vest transceivers to communicate on the maintenance network. In the hoist network, separate frequencies should be assigned to each shaft.

Emergency Communications Network

To create the emergency network, rescue teams could be equipped with vests tuned to an emergency network frequency. Underground ambulances could also be equipped with vehicular transceivers tuned to an emergency frequency. The emergency network could use the base station designated for the maintenance network. The emergency equipment could use the frequencies assigned to the maintenance network.

The amount of radio equipment recommended for use in each network depends upon the size of the mine. Table B describes the equipment used in maintenance and production networks in a medium sized coal mine.

TABLE B. - MF equipment requirements for a longwall coal mine longwall coal mine (1MTPY).

Production/Maintenance Network

Keypersonnel	Fixed Equipment Base	Fixed Equipment Repeater	Mobile Equipment Vest	Mobile Equipment Vehicular
(CONTINUOUS MINING (DEVELOPMENT) SECTIONS)				
Foremen	1	2	3	3
Roving Electrician			1	2
Roving Mechanics			2	2
Fire Boss			1	
Service Vehicles				7
(LONGWALL MINING SECTION)				
Foreman			1	
Coordinator			1	
Shearer Operator			1	
Mechanic			1	
Shield Operator			1	
(BELT HAULAGEWAY)				
Foreman	1	1	1	
Beltmen			2	
(VEHICULAR HAULAGE)				
Foreman			1	
Motormen			5	
Off Train Personnel			2	

PREPARING A RADIO COVERAGE AREA MAP

The mine map can be used to indicate radio areas in the mine. Included on the map should be a routing of electrical cables (telephone and AC power cable, control lines, belt fire monitoring lines, etc.) and all AC switch locations. A color code should be used to distinguish cable types. The map should also show the approximate geometrical center of the coverage area and the base station(s) and repeater(s) locations. The base station should be placed at the center of the radio coverage area. It must be located near 117 V AC power to enable charging of the base's standby batteries. When mine ventilation failure occurs in a gassy mine, an MSHA approved (see local MSHA district office) procedure must be used to turn off the battery supply. NOTICE: All installations must be coordinated with and approved by MSHA and state officials responsible for the inspection and safety of the mine(s) in question. Base station and passageway repeater signals in coal and M/NM mines can usually be received almost everywhere electrical conductors exist in the entryways; however, the talk-back range depends upon the distance of the radiating antenna from the conductors and the type of conductors in the entryway. The talk-back range that can usually be expected in the entry with different types of conductors is shown in table C.

Tunnel mode signal propagation enables the vehicular to base communication range to exceed 30,000 ft along unshield-

ed single-pair telephone cable. The range along the shielded 3-phase AC cable will usually exceed 10,000 ft. At each point where the primary power cable connects to a substation, the cable signal path loss will decrease range by approximately 2,000 ft. If AC switches are used in the power distribution system, an open switch will dramatically reduce the operating range.

TABLE C. - Approximate mobile transceiver (tunnel mode) talk-back range.

(Radiating antenna at 7 ft or less from cable-425 kHz)

TYPE OF CONDUCTOR	TALK-BACK RANGE (feet)
Dedicated two-wire cables	30,000
Telephone cable*	20,000
AC power cable	10,000
Steel cable	8,000
Pipe	3,000

* If shielded, range may be less than 20,000 feet.

In coal mines, seam mode signal propagation enables the coverage area to extent to adjacent conductorless entries. Seam mode coverage should also be sketched on a mine map for each base station and passageway repeater. The talk-back range from a vest or vehicular transceiver to a base station or passageway repeater depends on the distance of the transmitting vest antenna from the cable and the range to the base station or repeater along the cable. At a range of 1,000 ft, the vest talk-back distance can be as

much as 80 ft from the cable. It decreases to about 20 ft at a range of 5,000 ft. In a conductor free area the cellular repeater provides a vest talk-back range often exceeding a radial distance of 500 ft from the cellular repeater antenna.

Fringe zones exist beyond the coverage areas. At distances beyond 15,000 ft from the base, the zones exist beyond 8 ft from the conductor. Since communications received in these zones is low quality, passageway repeaters may be required to achieve acceptable coverage.

To avoid complaints of poor communication coverage, it is necessary to install a wire pair in all frequently traveled conductorless entries. Signs should be posted indicating the fringe zone limit. If the received communication sounds "scratchy", the miner should step toward the cable.

Figure 1-1 (see page 17) illustrates the repeater used to increase the operating range of the lower power vest transceiver.

The repeater can be used to increase the operating range between mobile transceivers and the network base station. To increase the range between mobile transceivers requires that the transceivers operate in the F1/F2 signalling mode. In a coal mine, cellular repeaters which use the "coal seam mode" of propagation should be used to extend radio communications to the face.

ENSURING USAGE AND MAINTENANCE OF THE SYSTEM

Once the system is installed and checked, management must assure it is used. To encourage use, in and out shift meetings should be required of all keypersonnel so mining activities can be set up and coordinated with radio in mind. Keypersonnel should be trained in the design and usage of the system. The training should take place in an area equipped with operating radio equipment to enable first hand experience with the equipment. It is suggested that keypersonnel be trained in the following areas:

- The operational features of the MF communications system-
- Characteristics of the System
    1. Component parts of the system
    2. Various circumstances applicable to the use of the equipment
    3. How to troubleshoot the equipment
- Underground communications environment.
- How to operate the equipment.
- Theory of operation.
- The loop antenna.
- The RF line coupler.
- How to maintain the equipment.
- The speech and signalling procedures.

The reliability of the radio system will depend upon adequate maintenance. Maintenance has been simplified since the radio equipment is designed around a standard set of

interchangeable plug-in circuit modules. All the equipment uses similar performing modules, thus all transceiver specifications are similar. The standard receiver, synthesizer, exciter and transmitter modules are used in the vehicular transceiver, base station and repeaters. The vest transceiver modules have been designed for use in hazardous atmospheres per Underwriters Laboratory Document UL 913 (MSHA requirements). The vest modules perform functions similar to standard modules; however, their design is substantially different.

Because of the equipment's design, maintenance requires repairs only to the module level; nevertheless, daily maintenance checks are required on the radios and a complete system check is recommended every three months.

V. MF DESIGN CONSIDERATIONS

INTRODUCTION

This chapter describes the theoretical methods used in the design of the medium frequency communications system.

The operating range of a medium frequency (MF) underground communications system depends upon many technical factors, including the characteristics of the noise generated in electrical power systems, signal propagation modes, the modulation-demodulation process, the efficiency of the couplers and the susceptibility of the receiver to desensitization by impulsive mine noise. Considerations of these factors provide additional insight into the expected system performance and a conclusion that narrow-band FM is the preferable modulation process.

Some of the problems which arise in the design are similar to those encountered in surface radio systems; therefore, solutions to these problems follow from a vast body of the communications knowledge developed over the past few years.

Today's advanced radio communication technology is largely based upon the propagation of radiated electromagnetic fields that travel great distances through atmospheric constituents. While it is true that these signals provide reliable communications over free space paths, waves encountering a contrasting medium are subjected to change in the wave propagation constant causing reflection, diffraction,

and absorption of the signal energy. The subterranean environment is extremely hostile to these signals. It was found that the signals from VHF and UHF transceivers are severely weakened when passing near rail haulage equipment, around corners or through ventilation barricades in the mine. As a result, communications fail (go below threshold) exactly where quality voice communications are needed the most. Leaky coaxial transmission lines excited by high power transmitters improve tunnel communications; however, old problems persist and new problems emerge. Communications through ventilation barricades and to the point of equipment breakdown were still not reliable. Further, the practicability of installing coaxial cable in the working area of the mine seems questionable.

Theoretical and experimental work by the USBM (8) and others have shown that MF signals propagate through natural media (rock, coal, etc.) and great distances down passageways in the underground mining complex. Emslie and Lagace (9) (10) established that a loop antenna would excite a coal seam mode enabling the propagation of MF signals through a coal seam. Other work (11) considered the excitation of monofilar and bifilar propagation modes on a transmission line in a passageway. Low loss transmission line propagation modes were discovered.

Whole mine radio signal transmission and distribution depends upon the model excitations described above. One of the advantages of MF signals over VHF/UHF planar wave sig-

nals is that MF signals are not subjected to extremely high path loss when passing near mining equipment, through ventilation barricades and around corners. This is especially important when communicating in a confined mine area or when repairing mining equipment at the point of equipment breakdown.

The operating range of an MF underground radio communication system depends upon many factors including:

- antenna magnetic moment (transmitted output power),
- the signal propagation mechanism (modes),
- carrier signal coupling efficiency,
- the system modulation-demodulation processes, and
- susceptibility of the receiver to desensitization by electrical noise and other interfering/jamming signals.

In a communication system, operating range is a strong function of the signal propagation mechanism and medium, and antenna coupling efficiency between other antennas and transmission lines in the signal distribution system. These factors have been extensively studied in the context of the subterranean communication problem (10) as well as in the related terrestrial communication literature. With respect to these factors, range optimization procedures are well known.

Another dominating factor in the design of any communication system is the radio frequency interference (RFI) generated by the mine electrical system. A review of the

measured noise data (12) (13) reveals that the noise field strength varies over an enormous range (by several orders of magnitude - 60 to 100 dB variation). The noise is greatest near AC to DC converters (rectifiers) and along the trolley conductor in a rail haulage system. Away from the haulageways, the electrical noise level is as much as 40 to 50 dB below the haulageway level. The noise level also changes over a large range during a typical working shift. The magnitude of the noise spectrum is a function of frequency. For frequencies below 50 kHz its magnitude increases with decreasing frequency at an average rate of approximately 14 dB per octave. Above 100 kHz, the noise density decreases at the rate of 6 dB per octave.

Receivers used in the communication system must be designed to operate in high electrical noise environments. High noise pulses cause ringing to occur in filter networks associated with IF amplifier and discriminator circuits. The ringing interferes with signal processing. Ringing can be minimized by selecting filter transfer functions with approximately linear phase response. The RF section must discriminate against the noise as much as possible and then amplify the modulated signal and noise in a linear way before converting the signal and noise to the proper intermediate frequency (IF) and subsequent signal processing.

SIGNAL PROPAGATION MODES

Coal seam and tunnel signal propagation modes were evaluated in a series of underground tests conducted by the Bureau (14,15). The test results indicated that the coal seam mode enabled maximum communications range in the frequency band extending from 400 to 700 kHz. This band is a subset of the medium frequency, (300 kHz to 3000 kHz) portion of the electromagnetic spectrum. Further, as predicted by theory (11), low loss signal propagation modes existed in entryways with electrical conductors. In-mine testing confirmed the existence of low loss signal propagation in the entries of both coal and M/NM mines.

Coal Seam Propagation Mode

The theory of electromagnetic wave propagation in layered formations has been rigorously developed by Wait (16). Figure 5-1 illustrates the model used to analytically determine the wave propagation characteristics in a coal seam.

The coal seam is bound by two conducting half spaces with the conductivity of the roof rock (σ_{rr}) being several orders of magnitude more than the conductivity of coal (σ_c). Along the transmission path (r), the vertical orientation of the transmitting loop antenna (source) produces a horizontal

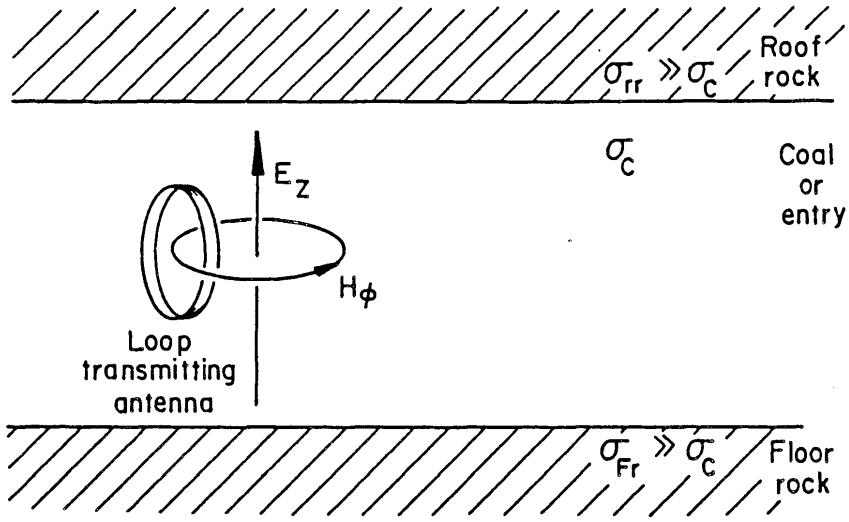

FIGURE 5-1. - Seam mode field components.

magnetic field H and a vertical electrical field E_z. These fields are relatively constant over the height of the coal seam[5]. It has been shown (17) that the fields die off exponentially in the rock[6]. At large radial distances (r) from the antenna, the fields decay exponentially. The rate of this exponential decay is determined by an effective attenuation constant which depends on losses in the coal and rock, and on the coal's dielectric constant. There is also a $r^{-1/2}$ factor at large radial distances because of the wave's cylindrical spreading. The zero-order TEM magnetic field H in the transmitting loop plane is given by:

$$H_\phi = (iMk^2/8\ b_e)\ H_1^{(2)'}\ (kr)$$

[5]With perfectly conducting boundaries, when (σ_{rr}) is finite, the zero-order mode field varies with z and r owing to wave propagation across the boundaries.

[6]Skin depth in rock is 0.69 meter, $(\sigma_{rr}) = 1$ mho, 520 kHz.

where M = the magnetic moment of the transmitting loop antenna,

b_e[7] = $b + 1/2$ is the effective half-height of the coal seam,

δ_r = the z direction skin depth in the rock,

$k = B$ = the complex propagation constant in the radial direction, and

$H_1^{(2)'}(kr)$ = the derivative of the first-order Hankel Function for an outgoing wave.

On taking the asymptotic form of the Hankel Function, the azimuthal component of the magnetic field [8] is:

$$|H_\phi| = \frac{M(\alpha^2+\beta^2)^{3/4}}{(8\pi)^{1/2}\left[(h+\delta_r)^2+\delta_r^2\right]^{1/2}} \quad \frac{e^{-\alpha r}}{\sqrt{r}} \tag{2}$$

The attenuation and phase constants are given by:

$$\alpha = \{(1/2)\left[(p^2+q^2)^{1/2}+p\right]\}^{1/2} \tag{3}$$

and

$$\beta = \{(1/2)\left[(p^2+q^2)^{1/2}-p\right]\}^{1/2} \tag{4}$$

where

$$p = \frac{2(\delta_c - 2\pi f\varepsilon_c)}{b}\left(\frac{\pi\mu_o f}{\delta_r}\right)^{1/2} - 4\pi^2 f^2 \mu_o \varepsilon_c \tag{5}$$

and

$$q = \frac{2(\delta_c + 2\pi f\varepsilon_c)}{b}\left(\frac{\pi\mu_o f}{\delta_r}\right)^{1/2} + 2\pi f^2 \mu_o \delta_c \tag{6}$$

[7] b_e may be complex.

[8] Valid at ranges $kr < 1$.

The zero-order TEM wave described by equation (1) has been compared with experimental measurements (18). These measurements were found to be in close agreement with equation (1). Equations (3) (5) and (6) are useful in determining the dependence of the wave propagation constant on seam parameters.

The attenuation rate in coal is approximately 4 dB/100 ft ($\delta_c = 1.4 \times 10^{-4}$ MHO/m, $\varepsilon_c = 7$, $(\sigma_{rr}) = 1$ s/m, b = 1m, 350 kHz). The attenuation rate is expected to increase with decreased coal seam thickness and increased conductivity. The rate decreases with increased rock conductivity. The rate also depends upon frequency.

Tunnel Propagation Modes

Bifilar and monofilar signal propagation modes exist on a pair of wires in the wireplant. The current flow of each mode is shown in figure 5-2.

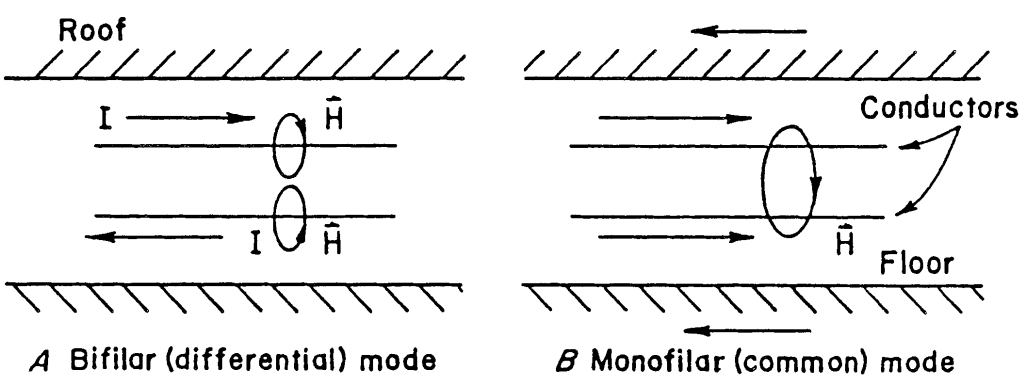

FIGURE 5-2. - Signal current (I) flow on conductors.[9]

[9]The number of possible modes is n-1 where n is the number of electrical conductors in the entryway. One of the conductors may be the conducting wall of the tunnel.

The excitation of monofilar and bifilar modes on a tunnel's transmission line have been examined (11). In the monofilar mode (also called the balanced, differential, coaxial, or symmetrical mode) the current flows in the same direction in each conductor and returns as a surface current in the mine tunnel. In fact, only one conductor is actually needed. This mode is easily excited by a magnetic coupling from a loop antenna anywhere in the mine tunnel, but it suffers high attenuation because the return current flows in the lossy tunnel wall.

In the bifilar mode which requires two conductors (also called the unbalanced, asymmetrical or differential mode), the forward current in one conductor returns through the other conductor. This transmission line mode has low attenuation because the return current flows on the second wire rather than through the surrounding rock. Excitation of this mode depends upon magnetic flux threading the area between the transmission line conductors.

Random imperfections in the wireplant and mine tunnels cause mode conversion to occur on a two-wire transmission line. Non-uniformities in the tunnel cross section, cable sagging with respect to the roof, and incidental changes in conductor spacing cause the characteristic impedance (z_o) of the cable to change along the line. Changes in this line characteristic impedance cause radiation and reflection of the signal energy thereby causing monofilar and bifilar mode interchange conversions to occur all along a line.

Radio coverage in conductorless entries can be provided by installing a dedicated cable such as two-wire telephone cable. It is easy to install and supports both the monofilar and bifilar modes of signal propagation. The MF antenna-to-cable coupling efficiency is high due to monofilar coupling and the operating range is great due to the bifilar mode propagation.

MODULATION PROCESSES

The quality of a communication system is judged by analyzing the recovered audio signal at the output of the receiver. The measurement of recovered audio output signal to noise ratio $(S/N)_o$ has come to be a reliable quality standard. It is made at the output of the discriminator in an FM receiver system and at the output of the product detector in an SSB receiver.

The output signal to noise ratio $(S/N)_o$ may be maximized by enhancing the signal in the presence of noise. Predetection filtering is useful in discriminating against noise that occurs outside the occupied bandwidth of the modulated signal. Noise discrimination improves by selecting higher operating frequencies (F_o) and by using the narrowest post detection bandwidth that is compatible with the modulated signal.

Spread spectrum modulating processes can increase the output signal to noise ratio $(S/N)_o$ by providing "process

gain" (the result of subsequent bandwidth spreading and de-spreading) in the communication channel. One of the most familiar spread spectrum modulation processes is seen in conventional frequency modulation (FM) where the modulation process produces a much wider occupied bandwidth than the information bandwidth. When discussing the signal-to-noise ratio, using frequency modulation at the output of the receiver, it is customary to relate the signal-to-noise ratio at the output of the receiver $(S/N)_o$ to the carrier-to-noise ratio (C/N) at its input. Both ratios are expressed in terms of powers or in a corresponding decibel ratio. The output signal-to-noise ratio $(S/N)_o$ represents the ratio of the power of the recovered signal (typically audio signal) to the power of the electrical noise collected over the bandwidth of the receiver. At the input of a receiver the signal power is represented by the power of the incoming carrier. To form the carrier-to-noise power ratio (designated C/N) we relate the carrier power at the input to the noise power at the input collected over the bandwidth of the receiver.

Figure 5-3 shows the process gain characteristics for FM, SSB, and AM modulation processes.

FM process gain increases with the modulation index (B) given by:

$$B = \frac{\Delta F}{f_m}$$

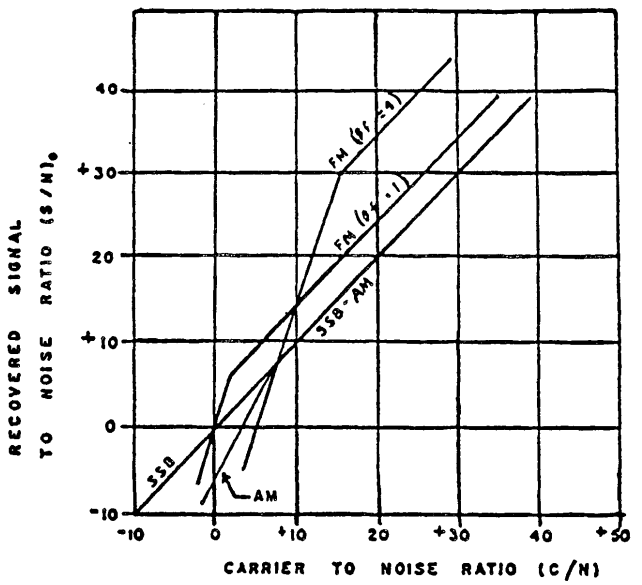

FIGURE 5-3.- Typical modulation process gain.

where F = the peak frequency deviation,

and f_m = the highest frequency in the modulating signal spectrum.

The break in the slope of the FM characteristics marks the threshold in process gain. For carrier to noise $(C/N)_o$ ratios below the threshold value, the recovered signal to noise $(S/N)_o$ ratio rapidly degrades. In contrast to FM, single sideband (SSB) does not exhibit a threshold.

When considering process gain, FM has an advantage in a communication system that can be operated with a large carrier to noise (C/N) ratio. The advantage, of course, depends upon the modulation index and the carrier to noise (C/N) ratio. In the near field communications system, the combined effects of near field propagation loss and noise force the carrier to noise (C/N) ratio to be low at times. In some cases, SSB might be preferable since it does not

exhibit a threshold. Thus, SSB signals can be understood better below threshold.

In today's congested-band terrestrial radio services, SSB is favored because the RF occupied bandwidth is the same as the information bandwidth. This means that more user service channels can co-inhabit the assigned service channel. On the other hand, the occupied bandwidth of an FM signal given by:

$$BW = 2f_m + 2\ \Delta f$$

or

$$BW = 2\ \Delta f \text{ where } \beta < 1$$

is much greater than the information bandwidth.

The operating range of the MF communication system is optimized when the magnetic moment (M) of the antenna is maximized. For a given transmitter output power and loop area, reducing the bandwidth (BW) of the loop increases the magnetic moment as shown in equation (7).

$$|\vec{M}| \propto \sqrt{\frac{Po}{BW}} \tag{7}$$

The occupied bandwidth of the modulated loop current signal must be within the bandwidth (BW) of the tuned loop. The tuned loop antenna attenuates signal components that occur near the band edge frequencies of the loop passband. The loop antenna will not reproduce magnetic moments for these band edge signal components. When the loop bandwidth is less than the occupied bandwidth, the modulation index B is reduced in the carrier signal. The modulation carrier signal occupied bandwidth determines the circuit $Q(Q_{CKT})$ of

the loop antenna as:

$$Q_{CKT} = \frac{\omega_o}{BW_{CKT}} \tag{8}$$

In practice, Q_{CKT} is bounded by considerations of whether or not it can be built. The higher bound is determined by unloaded $Q(Q_u)$ of the antenna structure. The lower bound is determined by the available transceiver power supply voltage and the current drive capability of the power amplifier. The lower Q bound militates against the use of wideband FM in the communication system.

SSB and narrowband FM can be compared on the basis of occupied bandwidth. The SSB circuit bandwidth can be one-half that required for narrowband FM. With respect to equivalent magnetic moment generated by the transmitting loop antenna, the SSB transmitter power can be 3 dB less than the FM transmitter power. On the other hand, an SSB loop antenna matching network requires a higher transfer ratio (n). The higher ratio makes the SSB antenna more sensitive to loading caused by nearby metal objects. Loading will cause the terminal impedance of the antenna to change. The Automatic Level Control (ALC) associated with the SSB transmitter will cause output power to vary with loading. By way of contrast, an FM transmitter's final amplifier can be designed to produce almost constant load plane power over a wide range of impedance. Thus a narrowband FM transmitter will produce constant power over a large range of incidental antenna loading conditions.

From the standpoint of receiver impulse noise succeptability, narrowband FM would appear to have an advantage over SSB because of limiting in the FM receiver. However, repetitive impulse noise causes the predetection circuits, to ring in both FM and SSB receivers. This degrades the recovered $(S/N)_o$ ratio. In an SSB receiver, each noise burst causes the SSB automatic gain control (AGC) circuit to immediately desensitize the receiver for the release period (time constant) of the AGC. Because of the way AGC control signals are developed, decreasing the release period below a certain value causes instability in the AGC control circuit. While impulse noise degrades the FM receiver recovered audio signal quality, an SSB receiver is desensitized for the AGC release period which dramatically reduces the intelligibility of the voice signal.

The operating range of prototype 1 Watt FM transceivers was compared to 1 Watt SSB transceivers in the York Canyon mine near Raton, New Mexico. Before the field test, laboratory measurements were made on the FM and SSB transceivers to ensure that the output powers were identical.

Along the longwall, the FM and SSB medium frequency (520 kHz) transceivers provided excellent coverage. In the entryways, the SSB transceiver range was about 400 ft while the FM transceiver provided entryway coverage exceeding one mile.

The above factors indicate that narrowband FM modulation has some important advantages over SSB. Narrowband FM was

selected for use in underground wireless communication systems.

COUPLING MF SIGNALS TO THE WIREPLANT

This section discusses the coupling of signals between transmitting loop antennas and the wireplant. The equations define bifilar mode coupling to cables in free space. Monofilar coupling also occurs, but the signal level depends upon the tunnel surface impedance.

Transmitting Loop Antenna and Two-Wire Transmission Coupling

Planning of the communication system's design is aided by theoretical equations that relate the bifilar current signal level induced in a wireplant transmission line to the magnetic moment (M_T) of the loop antenna operating frequency (f), loop to line distance (R) and conductor separation (b) in the line.

Equation(9) shows that coupling improves with frequency, the first power of magnetic moment, and an increased separation between line conductors. Coupling improves with the second power by distance from the loop to the line as the loop approaches the line.

Coupling also depends upon the geometrical relationships between the transmitting loop antenna and the two-wire transmission line. Some of the possible geometrical rela-

tionships are illustrated in figure 5-4.

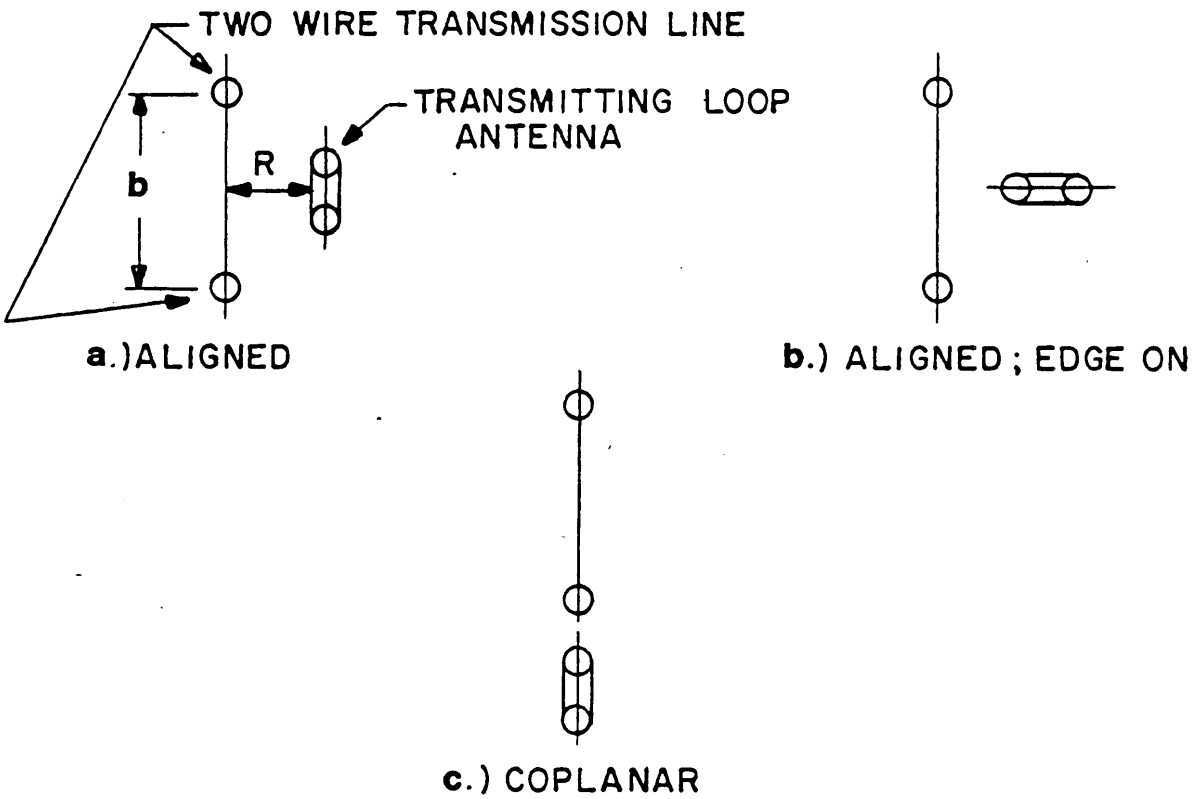

FIGURE 5-4. - Geometries for a vertical transmission line and transmitting loop antenna.

In the aligned case, shown in figure 5-4 (a), the loop antenna and the line conductors lie in a vertical plane. The distance R separates the planes. The coaxial configuration occurs when the center line of the transmission line coincides with the axis of the transmitting loop antenna. This geometry is frequently encountered when vest and vehicular transceivers are in an entryway. The axis of the loop may also be below the center line of the transmission line. This alignment induces strong bifilar currents and weaker monofilar elements in the line. The aligned, edge-on case

of figure 5-4 (b) induces stronger monofilar and weaker bifilar currents. The edge-on situation produces unfavorable coupling. The coplanar case in figure 5-4 (c) produces both monofilar and bifilar currents.

Equations have been developed that define the induced current and voltage in a transmission cable. The two-wire signal transmission medium is represented as a transmission line which is terminated at both ends by load impedances (z_1 and z_2) that are equal to the characteristic impedance of the line. The line is shown in figure 5-5.

The conductor spacing is represented by b. The field produced by the loop threads the area enclosed by the conductor spacing and a length (l) along the line. Since the field between the lines does not have a uniform magnitude, (l) represents the length of the line giving it an equivalent total threading flux, as if the field were uniform

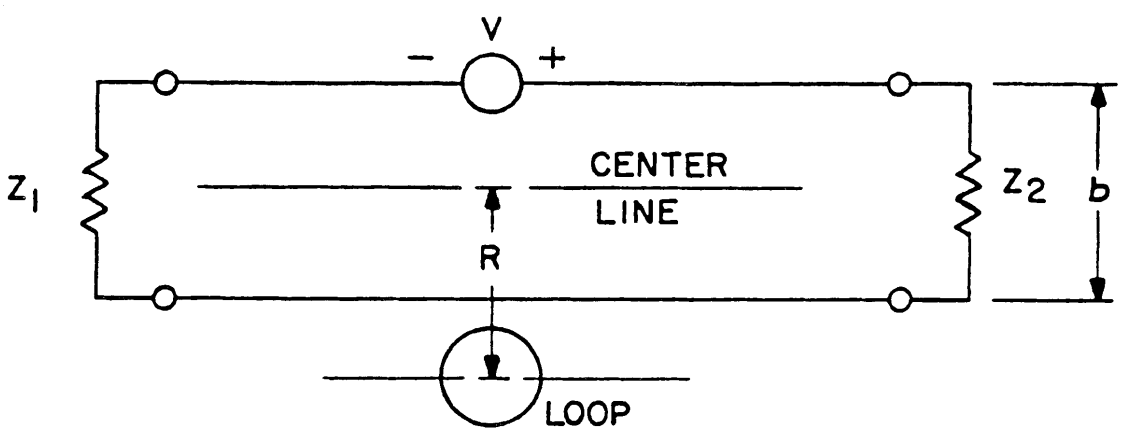

FIGURE 5-5. - Equivalent transmission line network for induced voltages and currents ($Z_1=Z_2=Z_o$).

within the length (l) and zero elsewhere. The length (l) is a simplified mathematical model; however, if more elaborate mathematics were used, (l) would approximately equal R. When $2\pi R << \lambda$, the induced voltage is given by:

$$V = \frac{\mu_o f M_T b}{R^2} \tag{9}$$

where f = the operating frequency,

μ_o = the magnetic permeability of free space

R = the loop to line distance,

b = the separation between conductors,

and M_T = the loop magnetic moment.

The current flowing in the line is given by:

$$I_L = \frac{V}{2\ Z_o} \tag{10}$$

In equations (9) and (10), the voltage and current signals induced in the line are directly proportional to the magnetic moment of the radiating loop antenna. Maximizing the magnetic moment for a given transmitter power will maximize the induced signal and the system's operating range. Increasing the transmission line conductor spacing decreases the line current since the line characteristic impedance (Z_o)increases as shown by equation (11).

$$Z_o = 276\ \mathrm{Log}_{10}\ \frac{2b}{a} \tag{11}$$

The voltage (V) depends on the first power of the conductor separation b, and Z_o depends on its logarithm. By maximizing b, there is some improvement in the obtainable

operating range. Coupling efficiency increases with the first power of operating frequency (f); furthermore, the line attenuation rate increases with frequency. Because of line loss, the use of lower operating frequencies is advisable. Yet, though transmission losses are lower at lower operating frequencies, increased mine generated electrical noise (EMI) causes the carrier-to-noise ratio (C/N) to degrade. This occurs because the EMI increases as frequency decreases. Mine tests indicate that the carrier to noise ratio (C/N) is optimized around the operating band of 250 and 500 kHz.

Transmiting Loop Antenna To Receiving Loop Antenna Via Transmission Line Coupling

The coupling of magnetic fields from current carrying conductors to distant receive antennas is shown in figure 5-6.

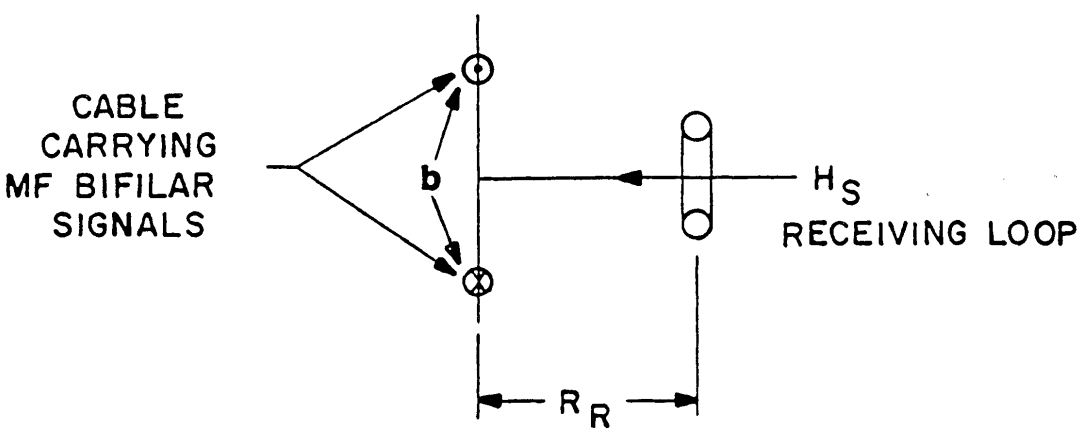

FIGURE 5-6. - Signal coupling to a receiving loop antenna.

The bifilar line current in the cables near the receiving loop produces a magnetic field which is mathematically represented by:

$$H_S = \frac{\mu_o f M_T b^2}{2R_T^2\left[R_R^2 + (b/2)^2\right] Z_o} \tag{12}$$

The electromotive force (EMF) produced in the receiving loop is given by Maxwell's first equation:

$$emf = \oint_C \vec{E}.\vec{dl} = N_R \frac{d}{dt} \iint_A \vec{B}.\vec{n}da \tag{13}$$

where B = the flux density threading the loop area A,

n = the unit vector of surface threaded by B,

and N = the number of turns in the receiving loop.

The equation simplifies to:

$$emf = \omega\mu_o H_S A_R N_R \tag{14}$$

By combining equations (12) and (14), the direct relationship between the transmitting antenna moment (M_T) and the receiving loop voltage (V_L) is obtained by:

$$V_L = \frac{\pi\mu_o^2 f^2 M_T b^2 A_R N_R}{R_T^2 Z_o \left[R_R^2 + (b/2)^2\right]} \tag{15}$$

$$\approx \frac{\pi\mu_o^2 f^2 M_T b^2 A_R N_R}{R_T^2 R_R^2 Z_o} \quad (b<<R) \tag{16}$$

Equation 16 is important in considering loop to loop via line coupling in the radio system. From the system design point of view, the voltage induced in a distant loop in-

creases with the second power of the transmission line conductor separation (b). When installing transmission lines for the purpose of increasing radio coverage in entryways, ruggedized twin lead cable is recommended since it has good conductor separation. Given the antenna physical mounting constraints (height and length), the receiving loop voltage increases with the number of turns, thereby, increasing the coupling efficiency of the antenna. Coupling increases with the second power of operating frequency.

Attenuation Rate

The attenuation rate on twisted telephone cable and AC power cable was measured in coal and M/NM mines. Accurate measurements are extremely difficult to make because (1) the distance variation between the transmitting/receiving loop antennas and the signal transmission line in the entryways causes uncontrollable second power of distance change effects in induced line currents; (2) there is an elevation deviation of the wire in the entry; (3) the shield conduction of the telephone cable may not be continuous through a telephone line junction box; (4) standing waves caused by discontinuities resulting from open or short circuits of the transmission lines may exist; and (5) mining operations limit vehicular transportation and prohibit mining processes to be disrupted for measurement procedures. Even with these difficulties, average attenuation rates were

measured in four mines.

The rates were found to be similar in both coal and M/NM mines. The induced monofilar current flowing on the transmission line at the base station was measured with a calibrated current transformer (probe).

Figure 5-7 shows a source (transmitting loop antenna) mounted on a mine service vehicle. The induced current was measured at the portal as the vehicle moved away. The measured data is shown in figure 5-8. The attenuation rate was approximately 2.4 dB/1,000 ft.

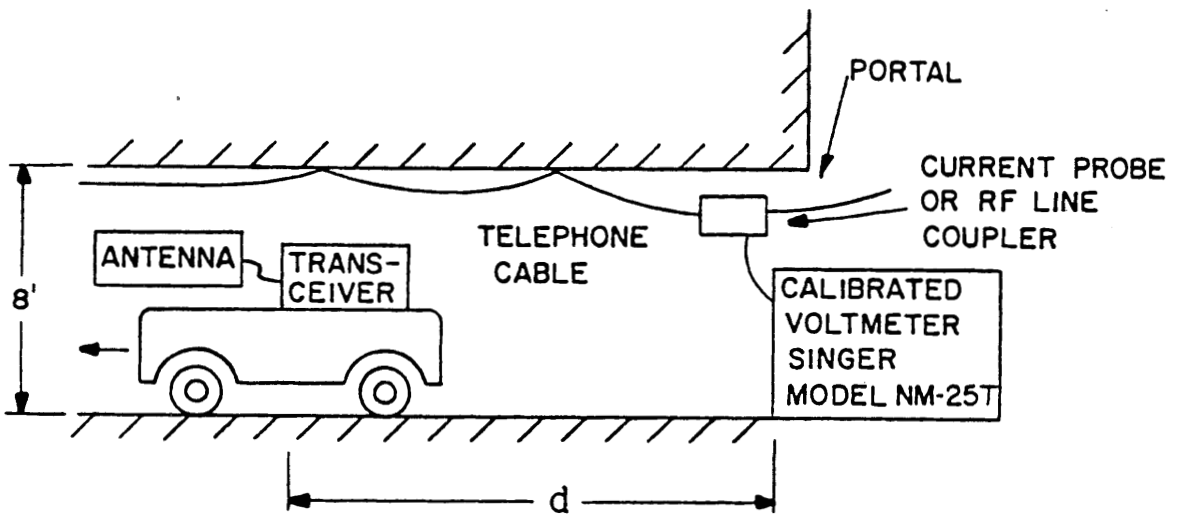

FIGURE 5-7. - Setup for measuring induced line current.

With a vehicle-to-base station separation range of 5,000 ft, the induced line current was approximately 707 microamperes. The mine generated noise was also measured during each field test. The induced noise level usually measured 2.2 microamperes in a medium sized coal mine with conveyor haulage. The carrier to noise ratio was found to exceed 50 dB.

The horizontal dashed line (C/N = 20 dB) represents the "threshold line current" needed by the system for good communications. The intersection between the dashed line and the projection of induced line current (not shown) forecast that the maximum communications range along telephone cable will exceed 20,000 ft at 520 kHz.

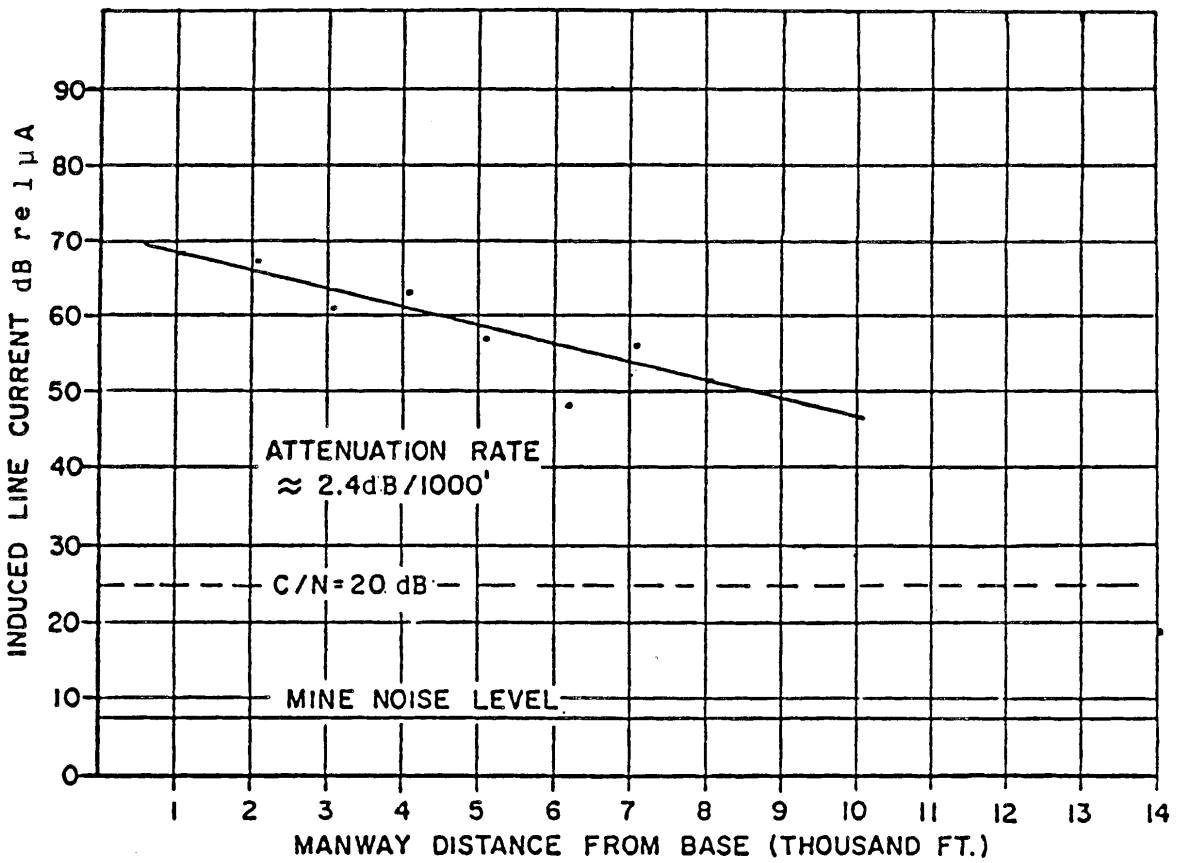

Figure 5-8. - Induced line current versus vehicular transceiver distance from base.

LOOP ANTENNA DESIGN CONSIDERATIONS

The underground communication range depends upon the abil-

ity of the transmitting and receiving antennas to efficiently couple coal seam mode and transmission line mode signals. Equations (9) and (16) show that the level of signals induced on a transmission line or at the receiving antenna output terminal depend upon the first power of the transmitting antenna magnetic moment (M_T). The receiving signal also depends upon the first power of turns-area product ($N_R A_R$) of the receiving antenna. The transmitting loop magnetic moment (M_T) is produced by an excitation current (I) flowing through the transmitting coil shown in figure 5-9.

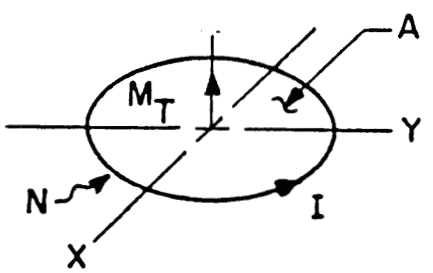

FIGURE 5-9.- Transmitting loop antenna excitation current and magnetic moment.[10]

[10]The direction of the magnetic moment can be determined by the "right hand rule" whereby the fingers of the right hand point in the direction of the magnetic field when the conductor is grasped such that the right thumb points in the direction of the current.

The magnetic moment is defined as:

$$|\vec{M}_T| = NIA \text{ ampere turn meters} \tag{17}$$

where A = the area of the loop in square meters,

I = the level of the excitation current in amperes,

and N = the number of turns in the transmitting loop.

The magnetic moment is a vector that is perpendicular to the plane of the loop. The transmitting loop turns-current-area product (NIA) is a scaler quantity. The loop antenna produces a horizontal magnetic dipole (HMD) when the transmitting loop antenna lies in a vertical plane and a vertical magnetic dipole (VMD) when in a horizontal plane.

Theoretical Basis For Loop Antenna Design

The theoretical basis for the design and optimization of a tuned loop antenna is presented in this section. It will be shown that the use of a twin parallel connected coil instead of a conventional single coil occupying the same constrained antenna area offers some important advantages. First, since each unit of the twin-coil is physically smaller, its self-resonant frequency is greater than that of a larger single coil design. Secondly, the unloaded Q of the twin-coil is greater enabling the receiving response to a given magnetic field strength to be greater than in a single coil loop. Finally, because the twin-coils are connected in parallel, the terminal inductance of the coil is less than a single coil antenna with the same number of turns. Thus, the twin-

coil loop produces less electric field stress across the antenna to coil and tuning capacitor. The magnetic moment of any conceivable system of current loops in any given geometrical configuration is mathematically represented by:

$$\vec{M}_T = 1/2 \quad \sum \oint \vec{I}_i \vec{r} \times \vec{dl} \tag{18}$$

where vectorial integration is conducted for each coil (i) and all its turns,

i = running subscript identifying the coils,

I_i = current the ith coil,

$\vec{r}$ = position vector with respect to any selected origin. The result does not depend on the selection of the origin, provided each loop is geometrically closed,

and $\vec{d}_l$ = incremental vector, tangential to the loop of each coil in the direction of current flow.

The concept of magnetic moment can be used to compute electric and magnetic fields at remote locations. The definition of "remote" is a large distance as compared with the dimensions of the coil. For coplanar coils, the magnetic moment is simplified to:

$$\vec{M}_T = \sum \vec{\mu}_i \, N_i I_i A_i \tag{19}$$

where, $\vec{\mu}_i$ is a unit vector perpendicular to the plane of the ith loop. Its direction is determined by the "right hand" rule.

The excitation currents flowing in a twin-coil transmitting loop antenna are shown in figure 5-10.

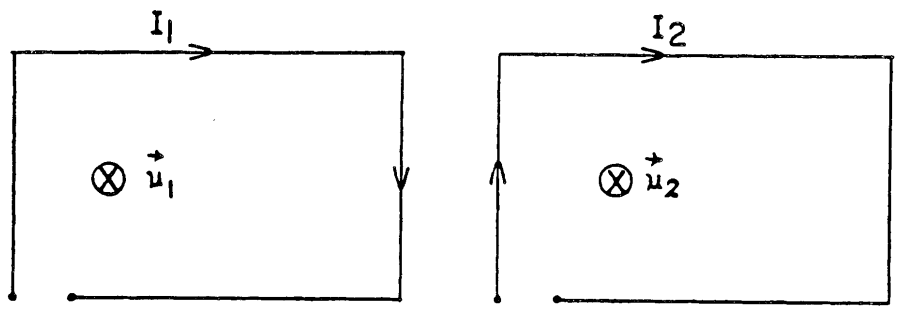

FIGURE 5-10. - Twin-coil transmitting loop antennas.

The twin-coil magnetic moment is mathematically represented by:

$$\vec{M} = \vec{\mu}_1(N_1I_1A_1 + N_2I_2A_2); \ \vec{\mu}_1 = \vec{\mu}_2 \tag{20}$$

The equivalent circuit of a single coil loop antenna is shown in figure 5-11.

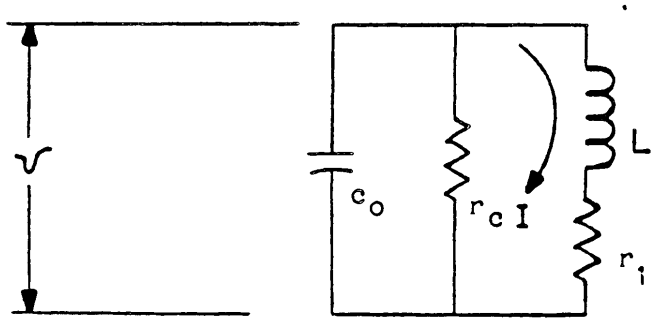

FIGURE 5-11. - Equivalent circuit of a single-coil loop antenna.

The inductance (L) represents the apparent inductance of the coil used in the construction of the loop antenna. It is an apparent inductance because distributed capacitance (not

shown) between coil turns tune out some of the real inductance. The inductance of a planar air-core coil is mathematically approximated by:

$$L = K_o A^{\frac{1}{2}} N^2 \tag{21}$$

where A = the area in square meters,

N = the number of turns,

and K_o = the form factor.

The inductance form factor depends on the ratio of the diameter (d) to the width (W) of a single layer winding. The incidental dissipation loss associated with the coil is represented as the AC ohmic resistance which is determined by equation 22.

$$r_l = \frac{\omega_o L}{Q_u} \tag{22}$$

where, Q_u is the unloaded Q of the coil. The capacitance (C_o) and loop inductance are resonant at the operating frequency. This is represented by equation 23.

$$\omega_o = \frac{1}{(LC_o)^{\frac{1}{2}}} \tag{23}$$

The typical unloaded Q of tubular and planar antenna coils are shown in figures 5-12 and 5-13. In the tubular antenna design, the antenna inductor was wound inside a 1 1/4 inch Lexan pipe. This allowed the starting and ending turns of the wire to be physically closer together which in turn lowered the unloaded Q. In a planar antenna inductor design a flat coil is placed between Lexan plates. Comparison of

the figures shows that the planar coil has significantly greater unloaded Q. Figure 5-12 shows the family of unloaded Q curves for a tubular single-coil antenna structure. The unloaded Q in the MF band degrades as turns are increased.

The ohmic value of the coil resistance (r_1) is frequency dependent. It increases at higher frequency because of skin effects associated with current flowing in the coil conductor.

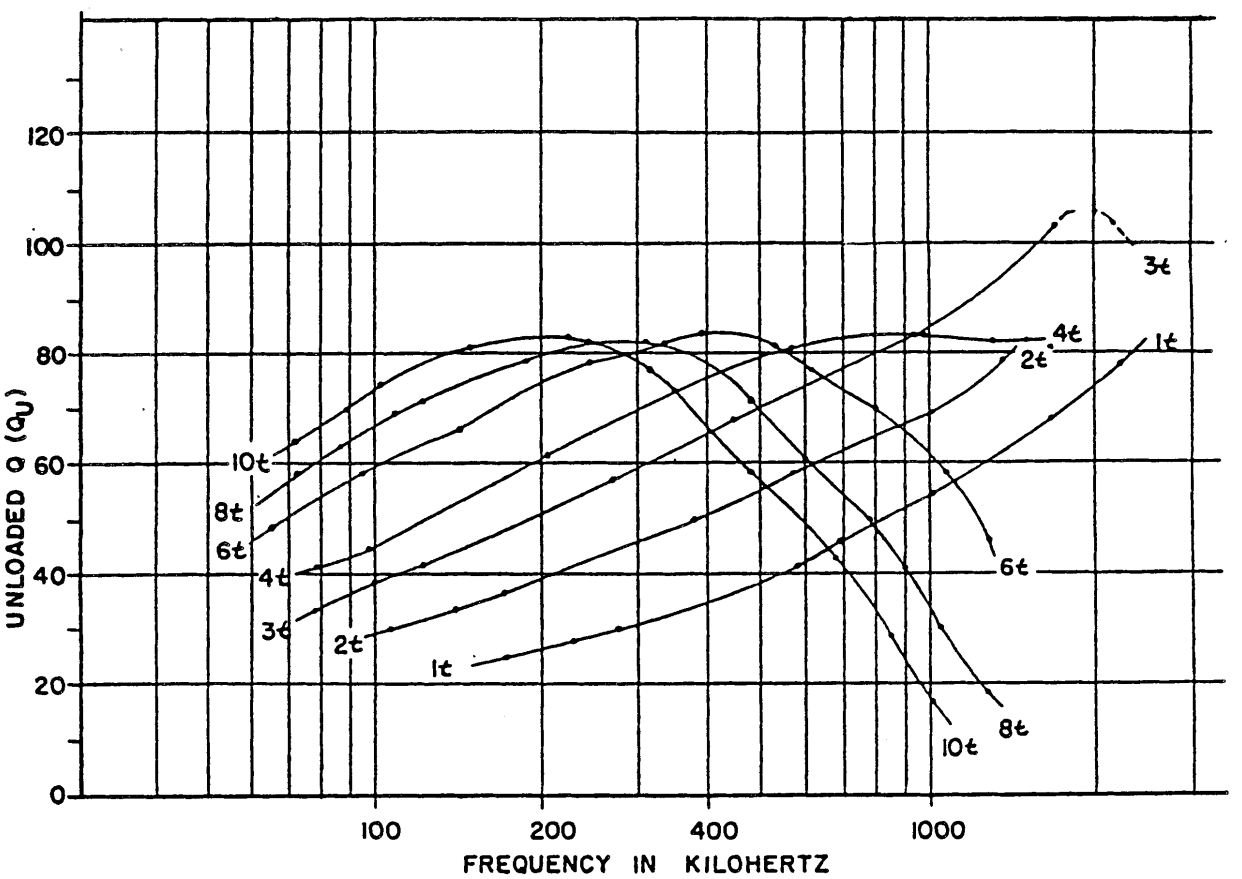

FIGURE 5-12.- Unloaded Q versus frequency for a flexible rectangular tubular Lexan antenna single rectangular coil (36" x 8" coil).

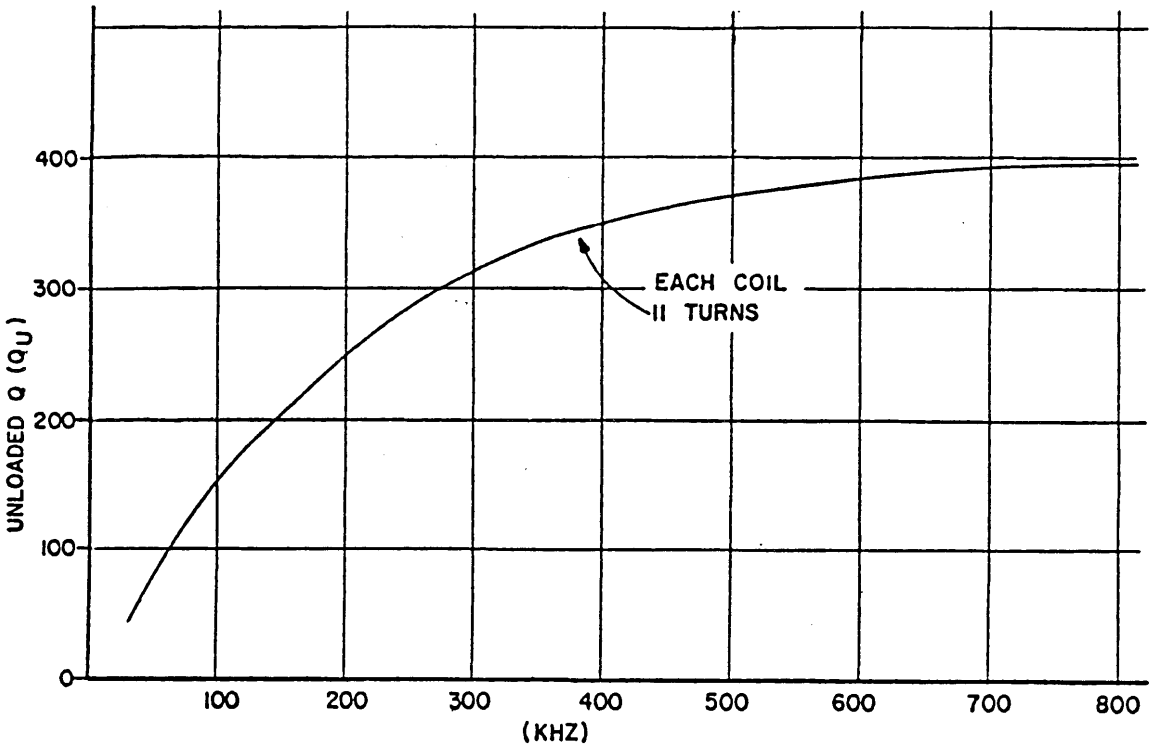

FIGURE 5-13. - Unloaded Q versus frequency for a flexible rectangular planar Lexan antenna (12" x 12" coil).

When a single-coil loop antenna radiates at a high power level, high electric fields between turns can produce corona effects. This also causes the apparent r_1 to increase. The resistance (r_c) represents the dissipation loss associated with the tuning capacitance (C_o). Depending upon the type of tuning capacitor, the loss resistance (r_c) may decrease with increases in operating frequency and the level of current flowing through the capacitance. The transmitter to loop matching network may be realized by using two capacitors as shown in figure 5-14.

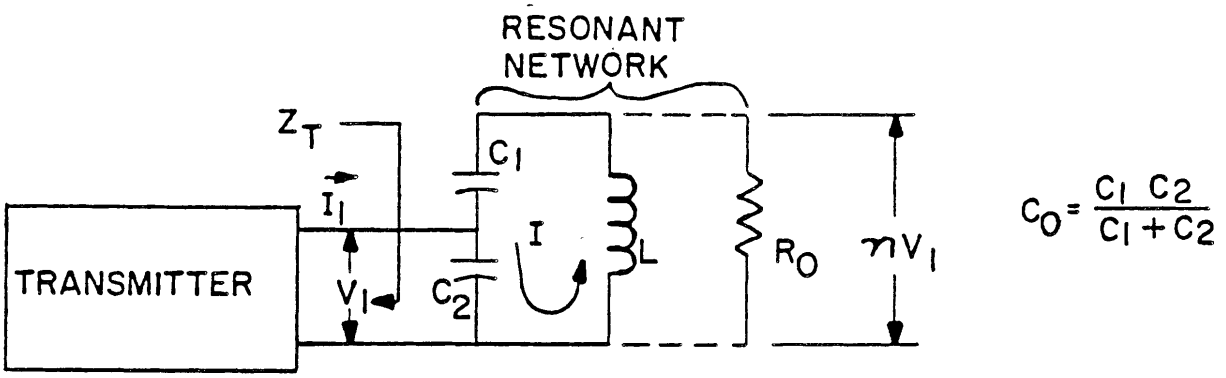

FIGURE 5-14. - Typical matching network.

The transmitter output impedance (Z_T) is transformed by the matching network and becomes part of the resonant network. The transformation ratio (n) is given by:

$$n = 1 + \frac{C_2}{C_1} \tag{24}$$

Impedances are transformed by the second power of n and voltage by the first power of n. The resistance R_o is the impedance of the resonant network at the antenna operating frequency (ω_o) and is given by:

$$R_o = \omega_o \, L Q_{CKT} \tag{25}$$

The circuit Q for the antenna structure is:

$$Q_{CKT} = \frac{\omega_o}{BW} \tag{26}$$

where, BW is the 3 dB radian frequency bandwidth of the antenna.

Because low dissipation loss porcelain capacitors are used in the structure, the ohmic value of r_c (shown in figure 5-11) is much greater than R_o. Under this condition,

the resistance (R_o) represents only the parallel combination of the transformed transmitter output impedance and the ohmic value of the coil loss given by:

$$R_{coil} = \omega_o L Q_u \tag{27}$$

when R_o is large and $I_1 < I$, then

$$\frac{I}{\omega C_o} = nV_1 \tag{28}$$

and

$$\frac{I}{\omega C_2} = V_1 \tag{29}$$

The circuit capacitances are mathematically represented by:

$$\frac{1}{C_1} = \frac{1}{C_o} - \frac{1}{C_2} \tag{30}$$

and

$$\frac{C_o}{C_1} = 1 - \frac{1}{n} \tag{31}$$

when n is large, then $C_o = C_1$. Under this condition the upper capacitor primarily determines the resonance frequency of the antenna structure. When the loop is transmitting, the capacitor (C_1) must withstand the RF voltage developed across the coil. In our case the transmitting loop antenna is also used for receiving (as a receiver input circuit). The matching to the receiver input, with the aid of the capacitive voltage divider of the ratio (n) must represent a good design compromise with the transmitting application. It must safeguard an acceptable value of receiving input bandwidth. The higher the unloaded Q value of the loop

winding, the better will be the efficiency of signal power transition to the receiver input.

The RF voltage (V) appearing across the inductances and capacitances in a transmitting antenna structure is mathematically represented by:

$$V = |\omega_o LI| . \tag{32}$$

When considering the antenna design problem, the question of whether to use separate antennas for transmitting and receiving or to combine the functions into a single structure arises. Receiving antennas are optimized by maximizing the number of turns (N_R) in the loop. A transmitting loop can have fewer turns. Regardless of how the antennas are used, the self-resonant frequency must be above the operating frequency range of the communication system. When considering the highest self-resonant frequency in the loop antenna design, the optimum loop shape is planar. This coil configuration minimizes the self-capacitance between turns. Capacitance can be reduced further by spacing adjacent turns, which reduces the electric field gradient between turns. It should be noted that the gradient can be partially canceled in a coil by crossover winding techniques.

When the antenna area is constrained (as it is in this design problem), it has been shown (20) that transmitting loop magnetic moment may be represented by:

$$|\vec{M}| \propto k_1 \sqrt{\frac{P}{BW}} \tag{33}$$

where P = the power dissipated in the loop,

and k_1 = a constant that depends on area.

Equation (33) is relevant in the antenna optimization problem. The magnetic moment depends on power and bandwidth and not on turns (N). Equation (16) shows that receiving sensitivity of an antenna increases with turns, thus the receiving function of a combination transmitting/receiving loop can be optimized by increasing turns. As a practical matter, turns can be increased until the self-resonant frequency of the coil approaches the operating frequency band from above. Another limit on turns is implied in equation (32). Since L increases with the second power of turns, maximum turns are determined by the dielectric withstanding voltage of the capacitors and coils used in the structure.

The principal objectives in the antenna design are:

- To optimize the design of a combination transmitting and receiving loop antenna, and
- To optimize the available area in order to design a loop antenna which has the highest magnetic moment and lowest RF voltage across it.

The last objective led to the solution involving twin parallel-coils forming the antenna in preference to an antenna using a single coil. The reduction in voltage between single and twin-coil antenna designs will be examined on the basis of equal power dissipation and loaded circuit Q. Both antenna designs will be assumed to have the same number of

turns and occupy the same total surface area. The area of each twin-coil is one-half the area of a single coil. The inductance given by equation (21) of the twin-coil is assumed to be proportional to the square root of the applicable area. Besides the area difference, the fact that the twin-coils are mutally coupled must be taken into account.

The power (P) dissipated in the single coil loop with an inductance (L) and ohmic loss resistance (r_1) is given by:

$$P = \frac{I^2}{2} r_1 = \frac{I^2}{2} \frac{\omega_o L}{Q_{CKT}} \tag{34}$$

In a twin-coil loop, the dissipated power is mathematically represented by:

$$P = 2\left(\frac{I_T^2}{2} r_1'\right) = I_T^2 \frac{\omega_o L_T'}{Q_{CKT}} \tag{35}$$

where L_T' is the inductance of a single coil in the twin-coil structure. The inductance includes the effects of the mutual coupling and smaller area of the coil. By equating equations (34) and (35), the relationship between current flowing in a single coil and in each coil of the twin-coil structure is given by:

$$I_T = I \frac{L}{\sqrt{2 L_T'}} \tag{36}$$

The RF voltages must be compared at resonance. The RF voltage (V_S) appearing across a single coil and the voltage (V_T) apearing across a twin-coil structure are given by:

$$V_S = |I\omega_o L| \quad \text{(single coil)} \tag{37}$$

$$V_T = |I_T \omega_o L_T'| = |I\omega_o \sqrt{\frac{LL_T'}{2}}| \quad \text{(twin coil)} \tag{38}$$

The voltage developed across the twin-coil is less than that developed across the single-coil.

The currents and inductances in the mutually coupled twin-coil loop are derived in the following coupled circuit analysis. The mutual coupling (M) in the twin-coil loop antenna is illustrated in figure 5-15.

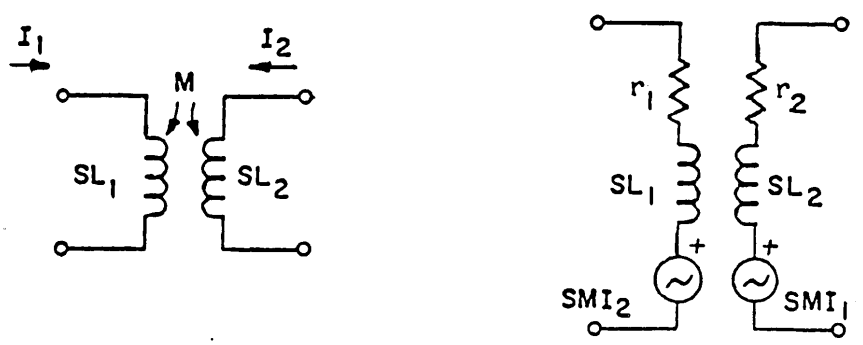

a.) MUTUAL COUPLING b.) DEPENDENT SOURCES

FIGURE 5-15. - Inductive coupling in the twin-coil loop antenna.

The dependent voltage sources (shown in figure 5-15) have been substituted for mutual coupling. Assuming that the coils are identical, the branch impedances are:

$$Z_1 = r_1 + SL_1 = r_2 + SL_2 = Z_2 \tag{39}$$

where S is the Laplace operator and (r , r) represents the ohmic value of the dissipation loss associated with each coil as well as the equivalent load. This is shown in figure 5-16.

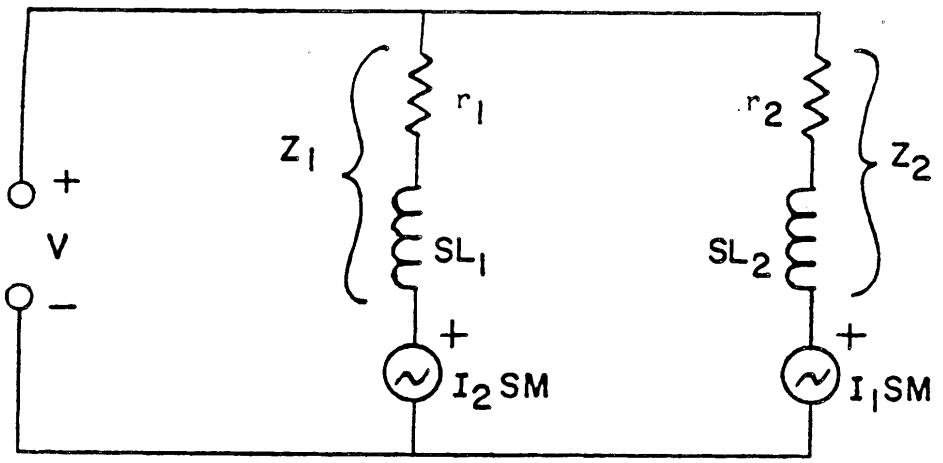

FIGURE 5-16. - Equivalent circuit of the twin-coil loop antenna.

The voltage common to both loops can be expressed as:

$$V = I_1 Z_1 + I_2 SM \tag{40}$$

$$V = I_2 Z_2 + I_1 SM \tag{41}$$

from these equations

$$I_2 = \frac{V - I_1 SM}{Z_2} \tag{42}$$

and

$$\frac{V}{Z} = I_1 + \frac{I_2 SM}{Z_1} \tag{43}$$

then

$$\frac{V}{I_1} = I_1 + \frac{VSM}{Z_1 Z_2} - I_1 \frac{(SM)^2}{Z_1 Z_2} \tag{44}$$

The branch current becomes

$$I_1 = \frac{V}{Z_1} \frac{\left(1 - \frac{SM}{Z_2}\right)}{1 - \frac{(SM)^2}{Z_1 Z_2}} \tag{45}$$

Since $$SM = k \sqrt{S^2 L_1 L_2} \tag{46}$$

$$Z_1 = Z_2 \doteq SL_1$$

then $$I \doteq \frac{V}{SL_1} \frac{(1 - k)}{(1 - k^2)} \tag{47}$$

$$I_1 = \frac{V}{SL_T'} \tag{48}$$

where the inductance (L_T') is given by:

$$L_T' = L_1 \frac{(1 - k^2)}{1 - k} = L_1 (1 + k). \tag{49}$$

Equation (49) allows the twin-coil loop antenna structure to be considered as composed of two uncoupled coils of inductance L_T'. The range of coil coupling is:

$$|k| \leq 1 \tag{50}$$

The magnetic moments of single-coil ($|\vec{M}_S|$) and twin-coil structures($|\vec{M}_T|$) are:

$$|\vec{M}_T| = 2N (I_T) (\frac{A}{2}) \tag{51}$$

$$|\vec{M}_T| = |\vec{M}_S| \sqrt{\frac{L}{2L_T'}} \qquad \text{(twin-coil).} \tag{52}$$

In the case of the planar twin-coil structure, the mutual coupling coefficient is negative and approximately $k = -0.1$. Then, the uncoupled inductance of each coil of the twin-coil follows from equation (51) as:

and $$L_T' = 0.9L_1$$

Since $$L_1 = L/\sqrt{2} \qquad (53)$$

Then $$L_T' = 0.64L$$

By substituting equation (53) into equation (38) and equation (52), a direct comparison of RF voltage and magnetic moment can be made between a single and twin-coil antenna as:

$$V_T = 0.57\ V_S$$

and $$|\vec{M}_T| = 0.88\ |\vec{M}_S| \qquad (54)$$

Single and twin-coil planar antennas were constructed and evaluated. The antennas were each driven from a vehicular transceiver. The loop design parameters and measured results are shown in table D.

During the test, the DC power applied to the vehicular transceiver power amplifier was 26.4 watts. When the transceiver was terminated by a 50 ohm power meter, the power meter reading was 20 watts. The capacitances C1 and C2 were used to couple the transmitter (source) to the loop antenna coils. The transmitter output impedance (antenna source impedance Z_S) was known to be non-linear. The capacitance values were selected to produce an apparent circuit bandwidth of 12 kHz centered about the operating frequency (400 kHz). When the loop antenna was used as a receiver, it was terminated by vehicular transceiver receiver input impe-

dance (50 ohms). The measured receiving bandwidth was approximately 12 kHz.

TABLE D. - Comparison single and twin-coil vehicular antenna characteristics.

PARAMETER	SINGLE-COIL	TWIN-COIL
Frequency (kHz)	400	400
Bandwidth (kHz)	12	12
Turns (N)	11 (total)	11 (per side)
Inductance (μH)	149	43.5
Area (m^2)	0.161	0.168
Unloaded Q (Q_u)	275	321
Capacitance		
C1 (Pf)	1160	4240
C2 (Pf)	15950	27200
CO (Pf)	1081	3668
n = 1 + C2/C1	14.75	7.42
$\omega_o L$(ohms)	374	109
RF Voltage (V_{pp})	2365	1298
V1 Voltage (V_{pp})	222.5	205
Loop Current (each coil)		
I (App)	6.32	5.95
Moment (ATM peak)	5.6	5.5

The tabular results are noteworthy in several respects. First, even though the circuit Q of both antennas are identical, the unloaded Q of the individual coils are not. This follows from the fact that the smaller planar twin-coil exhibits a higher self-resonance frequency (2.8 as compared to 1.5 MHz in the single coil). Secondly, the RF voltage appearing across the twin-coil structure is less than the voltage appearing across a single coil structure. The relative ratio of 0.55 compares closely with the value predicted by equation (54). The magnetic moments were found to be

almost identical in the single and twin-coil loop antennas. This was attributed to the non-linear behavior of the source impedance. In summary, the twin-coil loop antenna RF voltage for a given magnetic moment is less than in a single coil design. Because of the lower operating voltage, the dielectric withstanding voltage requirements are less severe.

Design Optimization Process

Coupling can be optimized by maximizing the (NIA) for the transmitting antenna and the $(N_R A_R)$ for the receiving antenna. Like all optimization problems, constraints placed upon the individual variables of the product significantly increase the design task. The optimization process to be described in this work examines each independent antenna design variable (x_i) and its upper bound $(\hat{B}_i)$. The upper bound for each variable may be written as:

$$X_i \leq \hat{B}_i \tag{55}$$

where the subscripts $i = 1,2,3,\ldots$ identify the variables and constrained values.

If separate antennas are used for receiving and transmitting functions, then the optimum feasible design will require different upper bounds for the antenna area and turns. If the functions are combined in a single antenna design, the same upper bounds apply. Antennas that operate in a hazardous atmosphere must have upper bounds on the transmit-

ting antenna's magnetic moment.

Physical reliability of the antenna structure imposes additional mechanical and electrical design constraints. The materials selected for use in construction of the antenna must allow it to survive extreme physical abuse. The electrical component reliability must not be adversely affected by

- High circulating current in the loop,
- High localized electrical fields that can produce corona effects, and
- High voltages that can break down dielectrics used in the construction of the loop components.

Design For Operation In Hazardous Atmospheres

The vest, and in some circumstances, the vehicular antennas must be designed to operate in hazardous atmospheres. As a result there are two types of design constraints that occur. The first is that the stored energy within the antenna inductances and capacitances must be less than 0.3×10^{-3} joules. The second is that localized electric fields developed in the structure can not be of sufficient strength to cause corona discharge effects or dielectric breakdowns.

The first constraint has been examined in previous work (10). The maximum intrinsic safe transmitting loop magnetic

moment may be represented as:

$$M_T = \hat{B}_3 \text{ (vest).}$$

and

$$M_T = \hat{B}_4 \text{ (vehicular)} \tag{56}$$

For the vest $\hat{B}_3$ = 2.5 ampere turns meter^2 (ATM^2). This limit follows from an analysis of Underwriters Laboratory Document 913. In mines that have gaseous or explosive environments anywhere in the mining complex, the vest transceiver design (including the antenna) must be approved by the testing and certification center, Mine Safety and Health Administration (MSHA). In fresh air and in non-gassy M/NM mines, the antennas may have greater magnetic moment.

In emergency situations, when ventilation is lost in a gassy mine, the use of non-approved radio equipment is prohibited. The design precautions related to the avoidance of excessive local electric fields causing corona effects or discharges through or on the surface of dielectrics must be very rigorously observed in order to obtain MSHA approval. In preliminary experiments, corona discharges were observed and damage to the surface of the dielectric used in structural components occurred before a safe design was realized. Relatively high RF voltages and high RF circulating currents may occur in the antenna loops; approximately 10 Amps and 1800 V peak-to-peak may be cited as upper-bound limits for these two situations. It is important to realize that high RF voltage per se does not cause corona effects, nor dielectric strain. The electric field, associated with RF voltage causes these effects. It is possible, by proper design, to

limit these fields for a given value of RF voltage by avoiding sharp points and edges and, in general, low radii of curvature in construction. Printed circuit boards must be coated by dielectric coating, capable of withstanding high values of electric stress. Circulating RF currents must be limited in order to reduce the stored energy in the tuned antenna circuit, the safe value being less than 0.3×10^{-3} joules, as before mentioned. The rationale for the above precautions is that ionization (corona) is caused by excessive electric field and sustained by the stored energy in the circuit.

Vehicular Antenna Area Constraint

The vehicular antenna must be of a low profile mechanical design with the antenna coil situated at least 6 inches from any metal mounting surface to avoid the effect of detuning. The antenna surface finish must not reflect light, must provide for vertical and horizontal mountings, and must be sealed to prevent ground water drip from contacting the internal loop components.

In field tests, flexible rectangular tubular Lexan and flexible rectangular planar Lexan antennas were evaluated on various types of underground vehicles. High impacts in the mine environment caused rigid metal antenna structures to deform and change area; however, flexible rectangular tubular Lexan structures proved effective in the environment.

Tubular structures are difficult to produce because multiple turns (actually multiple conductors) must be forced around bends in the rectangular tubular structure. Because the turns are confined in a circular cross section pattern, the distributed capacitance between turns is greater than if the turns were in a plane.

On the other hand, flexible planar antennas exhibited the highest unloaded Q (Q_u) and self-resonant frequency of all the antenna types investigated. Lexan laminated planar structures were found to withstand high impact abuse in mine usage, so this antenna structure was adopted for use in the program.

Personnel Antenna Area Constraint

Significant improvements in the design of the personnel antenna were accomplished. Any personnel antenna must fit the miner's body and be lightweight and convenient to wear. Any change in area of the antenna which results from a miner's physical body size or movement during work will change the antenna's operational performance. Any change in inductance will detune the antenna resulting in lower transmitting loop magnetic moment.

Rigid oval tubular, flexible strap (bandolier) and sewn garment antennas for roving miners were examined. The rigid oval tubular antenna ($B = 0.25m^2$) used on an earlier prototype MF transceiver (FM) design was found to be onerous to

roving miners because the area did not change with the miner's body size or movement. This resulted in encumbered movement.

The strap-type bandolier antenna used in the South African transceiver (SSB) design satisfied many human factor problems. Although roving miners were not encumbered when wearing the antenna, the antenna's detuning affects, due to changing area, prevent it from being used in a high performance communications system.

Another earlier prototype transceiver (SSB) employed a sewn garment circular loop antenna ($\hat{B}_1 = 0.15\ m^2$) which was positioned over the miner's shoulder (10). Like the bandolier antenna, the area depended upon the body size of the miner.

To avoid these and other problems a sewn garment antenna capable of being placed upon the front or back of the miner's work clothing was developed. The sewn garment antenna was found to maintain a constant area. For convenience of use, the antenna was sewn onto the back of a vest garment. The upper practical bound for the area of the vest loop antenna was found to be $\hat{B}_1 = 0.15\ m^2$.

RF LINE COUPLER DESIGN CONSIDERATIONS

The RF line coupler is a tuned multiple turn toroidal (doughnut shaped) air-core current transformer. The coupler design follows many of the design considerations which are

important in designing loop antennas.

The RF line coupler equivalent circuit is shown in figure 5-17.

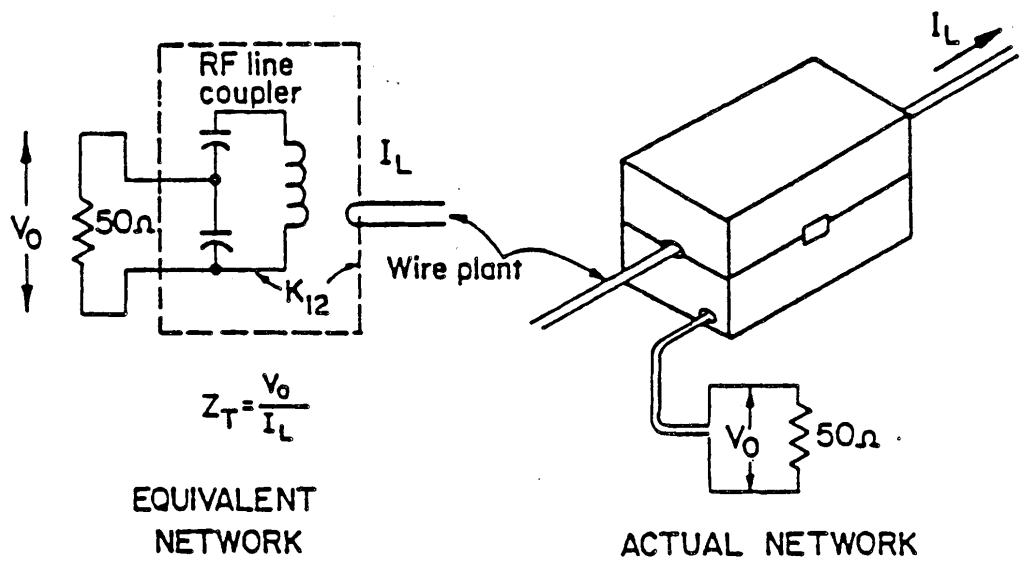

FIGURE 5-17. - RF line coupler.

The wireplant conductor becomes a single turn secondary of the transformer. The transfer impedance of the coupler is given by the following equation:

$$Z_T = \frac{V_1}{I_L} \tag{57}$$

where V_1 = the coupler output voltage,

I_L = the line current flowing in any wireplant conductor.

The coupler's efficiency can be characterized by its impedance because the output voltage applied to the receiver increases with a higher transfer impedance (Z_T).

Figure 5-18 illustrates how wireplant signals are coupled to the toroidal coupler.

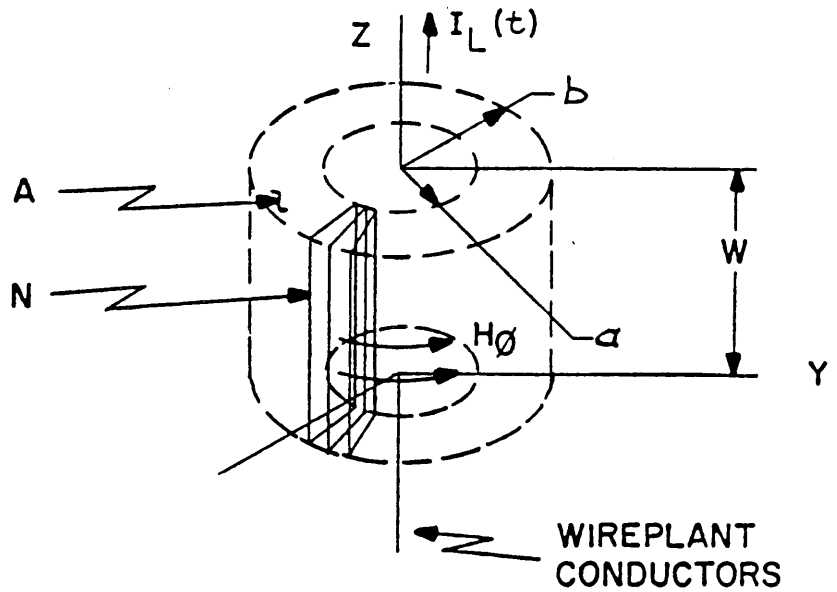

FIGURE 5-18. - Wireplant signal coupling to the toroidal coupler (cylindrical coordinates r, Z, ϕ).

The time dependent line current which flows through the center of the toroidal coil along the Z axis is given by:

$$I_L(t) = I_L \, SIN\omega_o t \tag{58}$$

From Amperes Law, the magnetic field at a radial distance (r) from the line current is given by:

$$\vec{H}\phi = \frac{I_L}{2\pi r} \quad a\phi \quad \text{(ampere/meter)} \tag{59}$$

where, a_ϕ is the azimuthal unit vector in the cylindrical coordinate system. The magnetic flux density in free space is:

$$\vec{B}_\phi = \mu_o \vec{H}_\phi \quad \text{(Weber/meter)}. \tag{60}$$

The magnetic flux (B_ϕ) passing through the area enclosed by each turn of the toroidal coil is:

$$\Phi = \int \vec{B}_\phi \cdot \vec{da} = \frac{\mu_o I_L(t)}{2\pi} \int_0^w \int_a^b \frac{dr}{r} \quad dz \tag{61}$$

The voltage induced in an N turn is given by Faraday's law:

$$V(emf) = -N \frac{d\phi}{dt} \tag{62}$$

Substituting equation (61) into (62) and differentiating with respect to time, the induced voltage is mathematically given by:

$$emf = \mu_o N I_L f W \left[Ln(b/a)\right] \tag{63}$$

When a capacitance matching network is used in the coupler design (see figure 5-18), the transfer impedance of the coupling structure may be mathematically represented by:

$$Z_T = \frac{V_1}{I_L} = \frac{-\mu_o - N I_L f W \left[Ln.(\frac{b}{a})\right]}{n} \tag{64}$$

The transfer impedance increases with the first power of turns (N), the current level (I), the coupler's operating frequency (f) and length (W), and the logrithm of the coils inside to outside diameter ratio. It decreases as the ratio C1/C2 increases.

Measurements were taken of the transfer impedance of an RF line coupler that could be clamped around a one inch cable. The results are shown in table E.

TABLE E. - RF line coupler transfer impedance

(1 inch)

Test Frequency	Transfer Impedance (ohms)
350 kHz	10
520 kHz	11.2

Because the coupling efficiency and signal attenuation rate increase with frequency, the operating range between transceivers along a transmission line pair (which supports the bifilar mode) exhibit an optimum value with respect to frequency.

The induced current flow in the wireplant by a transmitting coupler is dependent upon the resistance (impedance) of the conductors. Measurements were made to determine the induced current dependence on line resistance with the test setup shown in figure 5-19.

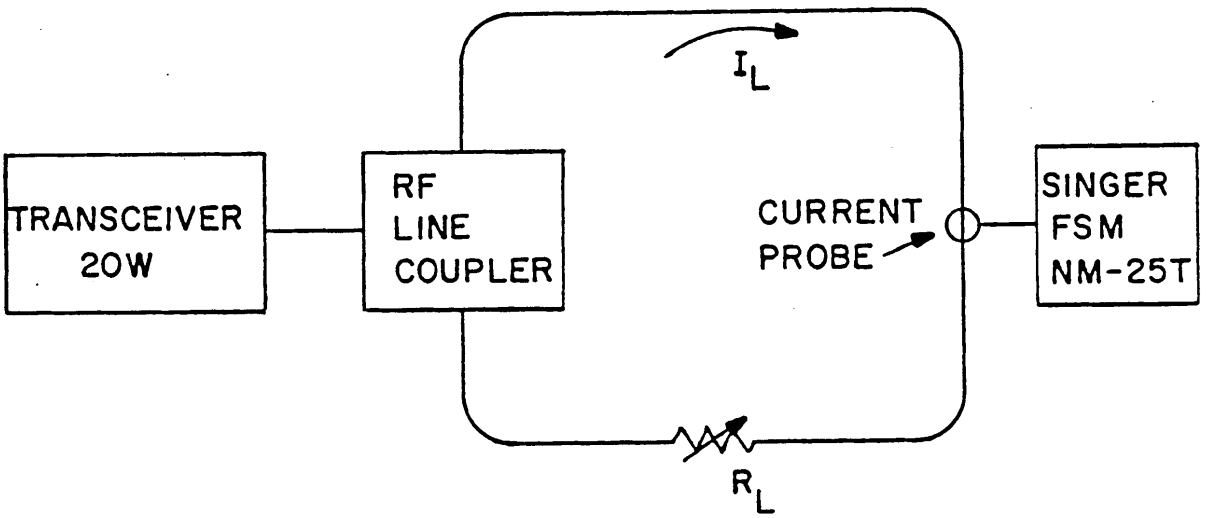

FIGURE 5-19. - Test setup for measuring induced current as a function of line resistance (R_L).

A vehicular transceiver was used to drive an RF line coupler. The line was a closed loop of #18 wire, approximately 30 ft in length. A decade resistance box was connected in the loop as shown. The Singer Field Strength Meter (FSM) (Model NM-25T) was used with a calibrated Fairchild Current Probe (Model PCL-25) to measure current in the line. The induced line current dependence on line resistance is shown in table F.

TABLE F. - Dependence and induced line current on line resistance.

	LINE CURRENT (MA) FREQUENCY	
RL (ohms)	350 kHz	400 kHz
0	316	501
50	133	251
200	26.6	79.4
400	13.3	28.2
600	8.91	18.8
1,000	5.31	11.9
2,000	2.51	6.31
5,000	1.12	2.82
10,000	0.58	2.11
100,000	0.18	1.58

Tests were also made to determine the induced current in multiple conductors. Up to 10 conductors were placed in the RF line coupler as illustrated in figure 5-20.

The circles symbolize the location where the standard current probe was used to measure induced line current. When conductors were removed from the RF line coupler, the line current in the remaining conductor did not change.

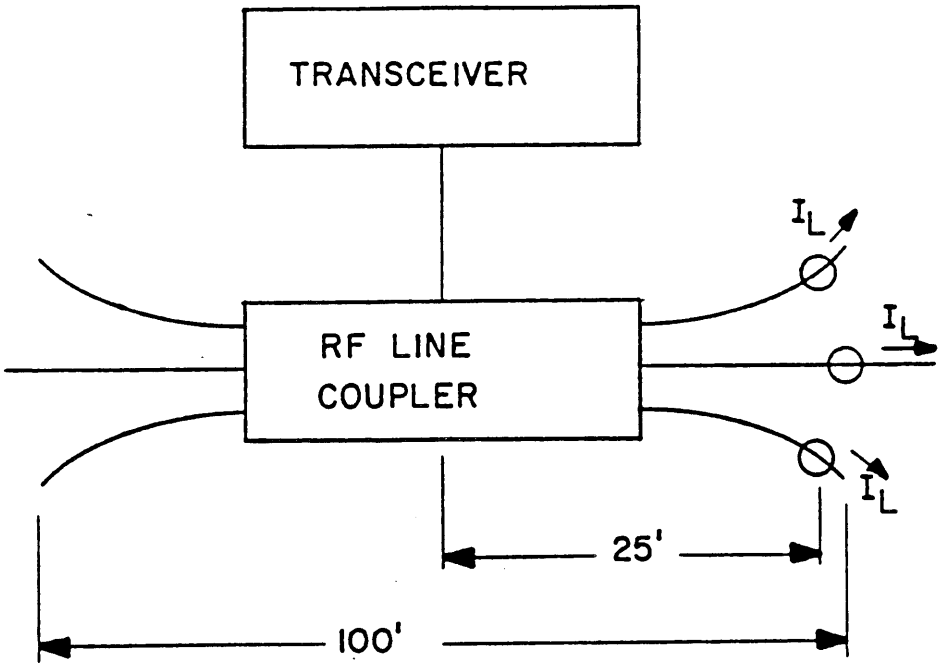

FIGURE 5-20. - Over the earth multiple wire coupling.

At 520 kHz, the induced current was measured to be approximately 3.9 mA in each wire. To a rough approximation, the data presented in table F indicates that the apparent circuit line and earth resistance is greater than 2000 ohms. In mine tunnels, the apparent resistance of telephone cable is also approximately 2000 ohms.

CONSIDERATIONS OF ACOUSTICAL DEVICE SELECTION

It is necessary to address the criterion for selecting microphones and speakers that must be used with any mine communication system because the improper selection of these devices can seriously degrade the performance of an otherwise good communication system. Within a mine, measured acoustical noise ranges from the threshold of hearing

(0.0002 Dynes/Cm^2) to more than 104 dBA (158,489 times the threshold of hearing).

Noise levels of more than 104 dBA have been measured in the reverberant surroundings of the longwall and noise levels of 108 dBA have been measured near mining equipment. Table G shows the typical noise levels measured in the near vicinity of mining equipment. For comparison purposes figure 5-21 shows the noise spectra measured near an operatng longwall and inside the M-60A military tank.

TABLE G. - Measured sound pressure level of mining machines.

Machine	Sound Level In dBA
Diesel Powered Locomotive	92
Joy 10RU Cutting Machine	97
Wagner HMTT-410 Ram Hauler	99
Joy Loader	103
Exhaust Fan	103
Wagner Loader	106
Wagner MTT-108 Truck	108

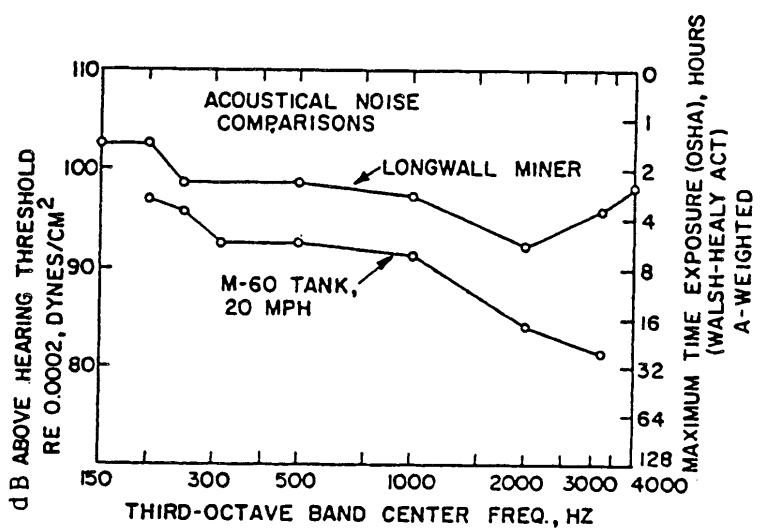

FIGURE 5-21. - Acoustical noise comparisons.

Comparison of the M-60A tank and longwall acoustical noise levels is noteworthy. A great deal of military research (21) has been focused on the problem of communicating from high acoustical noise environments. Much of the military work considers the problem of improving communications from inside a moving tank. This work provides a basis for understanding how acoustical noise interfers with speech intelligibility scores and how to improve the scores in the underground mine environment. Military research indicates that intelligibility scores of voice modulated radio signals from inside a moving tank is below the minimum acceptable limit (21). This is caused by the ambient acoustical noise mutilation of the speech pressure wave on the microphone diaphragm. By the same mechanism, voice radio communications near operating mine equipment are expected to be below the minimum intelligibility score.

Microphones

During the early years, microphones were designed using resistance responding and controlled reluctance techniques. The carbon microphone is an example of the resistance responding microphone. Controlled reluctance microphones were designed with either a coil or magnetic armature mounted on a diaphragm; an example of this type of microphone is a telephone headset receiver.

Microphones have also been constructed with piezoelectric materials such as quartz, rochell salt crystals, and PZT/BaTiO ceramic materials. In recent years, the piezoelectric (PZT) properties of fluorocarbon polymers films have been investigated for use in the design of "thin" microphones.

In general, microphones are broadly classified by their order. A zero (0) order microphone reproduces speech without inherent noise cancelling properties. That is, both speech and background noise cause the microphone to produce an output signal. Microphones that respond to the pressure "difference" across the diaphragm or to noise and speech waves that impinge on both sides of the diaphragm are called first order pressure gradient microphones. When first order gradient microphones are connected in arrays to improve noise suppression, they are called second order gradient microphones.

There are two factors that make the first and second order gradient microphones effective in suppressing background noise. These factors are:

(1) The "Proximity effect" whereby spherical speech pressure waves produce a greater pressure gradient across the microphone diaphragm than do planar wave noise signals which are generated at distant points.

(2) The cosine or directional response of the microphone due to acoustical access to both sides of the diaphragm and the diffraction effects of the microphone in relation to the wavelength.

First and second order gradient noise cancellation occurs because the phase and amplitudes of the far field noise signal sum to zero on the PZT diaphragm.

Several methods are available to obtain noise reduction in the design of a microphone. They are summarized as:

(1) Direction zero (0) order microphone,

(2) Contact microphones, and

(3) Gradient microphones.

In principal, a directional microphone will provide noise reduction; yet in many applications when ambient noise is a problem, these microphones have not been effective.

Contact microphones are sometimes called "Bone" or "Skull" microphones. They offer little, if any, improvement in noise reduction since the skull itself becomes a noise conductor and therefore does not produce noise cancelling. Other problems with contact microphones are that they provide considerable discomfort to the users and moving vehicular vibrations may be conducted through the body causing the contact microphone to respond to unwanted noise signals. The discomfort of contact microphones was recently supported in development work done by the U.S. Marine Corp. The microphone was being developed for use in amphibian vehicles (landing craft), but the work was terminated when the marine

radio operator complained about the microphone compression discomfort and resulting headaches. First and second order gradient air path microphones offer theoretically predictable noise cancelling possibilities. From a circuit theory point of view, a high pass filter can be used as an analogy for the gradient microphone. Using the high pass filter analogy, the noise discrimination capability is shown in figure 5-22.

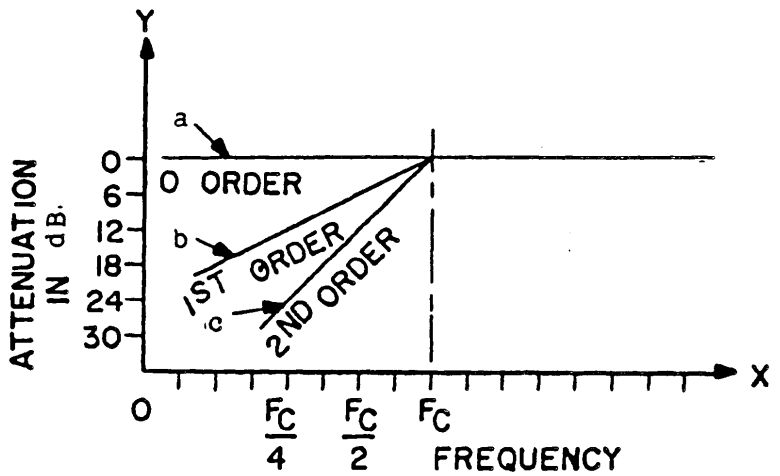

FIGURE 5-22. - Normalized noise frequency response of a gradient microphone, a) voice signal, b) far field noise first order gradient microphone, and c) second order gradient microphone.

The ordinate or y axis is labeled attenuation in dB. The attenuation represents the noise cancelling capability of the microphone relative to a reference-curve "a".

The abscissa or X axis is "scaled" or normalized in terms of the cutoff frequency (F_C) also called "cross over" frequency by microphone technologists.

The cutoff frequency of the noise cancelling microphone represents the noise frequency below which cancellation occurs. Curve "a" represents the theoretical output signal produced by a noise cancelling microphone to spherical wave-front speech signals. In practice, the microphone response will not be flat (constant) and will exhibit considerable frequency dependence. In a first order gradient microphone, the noise cancelling microphone attenuation increases by 6 dB each time the noise frequency is reduced by one-half. For a second order microphone, the attenuation increases by 12 dB for each 50 percent reduction of the noise frequency. In general, the asymptotic rate of attenuation is given by:

$$dB = n6 \text{ per octave reduction}$$

where n = the order of the gradient microphone.

With this background, the limitation of noise attenuation can be readily assessed. If the amplitude spectrum of the noise source has prinicipal components below the cutoff frequency (f_c) noise cancelling occurs. Also, the higher the cutoff frequency, the better the noise cancelling attenuation for a particular noise source (same amplitude spectrum). As it turns out, the cutoff frequency is dependent on the "thickness" of the microphone diaphragm, so thinner diaphragms have higher cutoff frequencies and are better noise cancelling microphones. From the above information, it could be reasonably concluded that higher order microphones are important in this application. Although a second order microphone may offer much greater attenuation, this

conclusion may not be correct. The reason being that changes in air path length occur during utterances and the apparent source position changes with lip movement (even if the microphone is stationary). Changes in air path length cause "phase" distortion to occur.

In phase distortion the instantaneous pressure for a spherical wave is given by:

$$P = \frac{pkcA}{r} \sin k\,(ct - r) \tag{65}$$

where $k = \omega/c$ is the free space propagation constant,

c = the speed of sound in air,

ω = the radiant speech frequency,

r = the air path length ,

p = the air density,

and $P = e\omega A$

Equation (65) may be rewritten as:

$$p = \frac{P_o}{r} \sin (\omega t - kr) \tag{66}$$

The argument of the sinusoidal term includes the propagation constant (k) and the path length (r). Changes in path length (r) cause changes in phase (kr) or phase modulation. In a filter network, the non-linear phase response of the filter transfer function causes distortion to occur in the speech signal as it "flows" through the network. The degree of distortion is dependent upon the type of transfer function and the asymptotic behavior of the attenuation characteristic. That is, the greater the rate of change of asymp-

totic attenuation in the stop band, the greater is the speech distortion. Increasing the attenuation characteristic of a microphone can be expected to increase "phase distortion" problems.

Since it can be expected that small changes in air path length will "modulate" the speech signal in higher order noise cancelling microphones, noise cancelling microphones should be positioned to the side of the mouth to reduce the "puff" sounds.

The Advanced Narrowband Digital Voice Terminal (ANDVT) microphone and audio system study (21) is the most recent and extensive research into intelligibility scores achieved by various acoustical devices in a wide range of background acoustical noise levels.

Inside the M-60A tank, the military M-138 noise cancelling microphone is used with circum-aural earphones to achieve an intelligibility score of over 87 percent (72 percent is the minimum acceptable limit). To attain this score, a high pass filter with cutoff frequency of 300 Hz is designed into the audio processing path. This discriminates against the lower octave noise shown in Figure 5-22.

After evaluating various microphones for the MF communication system, the following conclusions have been reached:

(1) Bone and skull microphones should not be considered for use in the underground mining situation.

(2) Thin diaphragm noise cancelling microphones should be used in high acoustical noise areas.

(3) A noise cancelling airpath microphone must be positioned on the radial line (to the side of the mouth) within a distance of 1/2 inch or less from the lip. This requires the use of a flexible microphone.

(4) A noise cancelling microphone cannot be built into the control head enclosure because the "apparent" microphone diaphragm would be thick, thereby yielding a low cut off frequency (Fc). The enclosure always needs to be placed within 1/2 inch of the lip.

Noise Cancelling Microphones

Acoustical noise and its effects on voice transmission quality were studied in the four mines used for field tests; however, a more extensive series of tests was conducted in the York Canyon Mine. The purpose of the tests was to evaluate various types of noise cancelling microphones and earphones in the underground mine environment. The poly (vinylidene flouride) (PVF2) polymer film microphone, a military M-138 noise cancelling microphone, and a standard dynamic non-noise cancelling microphone were evaluated by voice recordings near an operating longwall. The voice recordings were made using ANSI phonetically balanced word lists. The results are shown in table H.

Test averages in quiet environments show the microphone intelligibility to be very similar, yet when subjected to

higher background noise there is a distinct difference.

TABLE H. - Measured articulation index.

Microphone	Intelligibility Score
Quiet Area	
Standard	85.3%
M-138	83.3%
PVF2	84.3%
Longwall	
Standard	66.7%
M-138	77.7%
PVF2	84.0%

In the vicinity of an operating longwall, the "standard" non-noise cancelling microphone scored below the minimum acceptable level of 72 percent. Although the M-138 microphone performance was acceptable, it degraded from the quiet value. The "thin" PVF2 microphone scored well above the M-138 microphone intelligibility score. The score did not change from the quiet area score.

Vest Microphones

A prerequisite for a vest microphone is that it be convenient to use and not onerous to the miner. A hand held microphone was found to be unacceptable because the microphone cord could accidentally become entangled in mining equipment and cause injury to the miner.

A PVF2 boom microphone and circum-aural ear cup speakers (fig. 5-23) mounted on a miner's cap were found to be better for achieving an acceptable intelligibility score when the

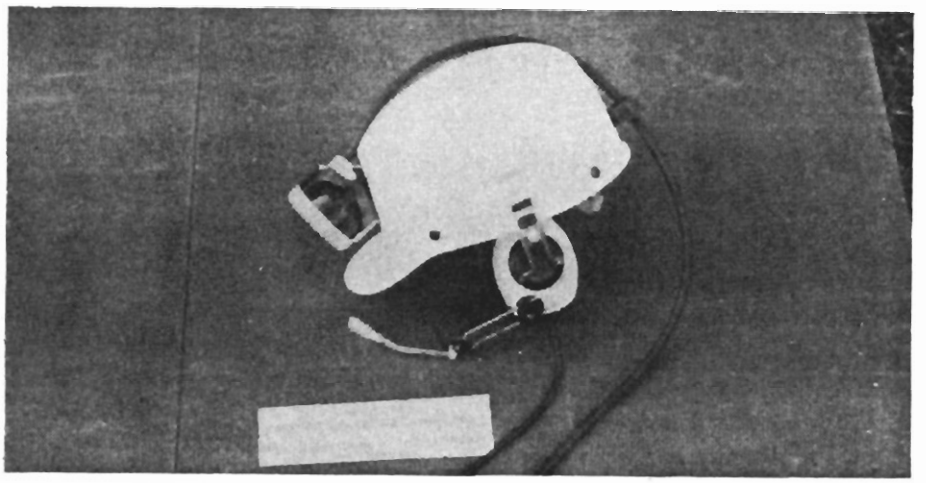

FIGURE 5-23. - PVF2 boom microphone and circum-aural ear cup speakers.

miner was in high acoustical noise areas or on foot. The PVF2 boom microphone can be positioned near the miner's lips. Speakers are installed in the circum-aural ear cups. Working miners expressed concern that the boom microphone would be damaged while working, but the microphone is constructed of tough plastic and survived mine testing. Evaluation indicated that acoustical transducers are required when the noise level is greater than 86 dBA. Working miners preferred the control head microphone (shown in figure 3-6) over the PVF2 boom microphone.

The control head ceramic microphone achieved an acceptable score when the noise level was less than 86 dBA. However, in fresh air entries, the ventilation air flowing across the control head produced an unacceptable level of "wind" noise. The "wind" noise problem was solved by mounting the ceramic microphone element in acoustical wind screen foam material.

VI. MF SYSTEM DESIGN SPECIFICATIONS

INTRODUCTION

The design specifications for the MF communications system are described in this chapter. The specifications define the overall system characteristics, module level specifications and equipment specifications. The equipment specifications are for:

- A standard vehicular transceiver.
- A base station comprised of a standard vehicular transceiver and RF line coupler.
- Remote control console for controlling base stations from remote locations via wireline control.
- Vehicular transceiver and audio head.
- Vest transceiver for roving personnel.
- Global repeaters for increased operating range.
- Cellular repeaters for wide area coverage in working sections.
- RF line couplers.
- Tuned loop antennas.

Basic transceivers and repeaters are designed around a standard set of circuit modules, thus it is the module level specifications that determine the electrical performance characteristics of the equipment. To insure interface compatability between modules, standardized interconnecting

loads and levels have been established as part ofthe general system specifications.

GENERAL SYSTEM SPECIFICATIONS

The general system specifications are given in table I. These specifications should be followed in order to assure the best radio coverage and equipment reliability in the mine environment. Strict adherence to the equipment interconnection (interface) specifications, which are given in the table, will ensure compatability of MF equipment to other mine radio equipment.

TABLE I. - General system specifications.

1. <u>SIGNAL EMISSIONS</u>:	
.Type	Narrow band FM
.Emission	10F3
.Frequency Range	60 kHz to 1000 kHz
.Tuning	5 kHz increments
.Peak Deviation	2.5 kHz
.Frequency Separation	50 kHz (minimum) for repeaters
2. <u>MODULATION</u>:	
.Processing (voice)	Enhanced average voice signal processing
.Frequency Range	200 to 2500 Hz (3 dB BW)
3. <u>SQUELCH</u>:	
.Type	Two alternate types of squelch control: Noise Operated Tone Operated

Table I. - General system specifications -- Con.

4. SIGNALLING TONE FREQUENCY:	100 Hz for subaudible tone & 1000 Hz for inband signalling
5. TYPICAL OPERATING RANGE:	200 to 400 meters (in coal quasi-free conductor area) 20,000 ft, 7 ft from wireplant conductors
6. ENVIRONMENTAL:	
.Operating Temperature Range	-20 to 60 degrees C
.Shock (drop)	4 feet onto soft pine board 2" thick
.Dust	Dust resistant
.Special Condition	Withstand corrosive ground water drip
.Vibration	0.045 inches P-P amplitude vibration 10 to 55 Hz
7. CONSTRUCTION:	Sealed stainless steel enclosures Activated desiccant per Mil-D-3464D Interior protected with vapor corrosive inhibitors Humiseal coated printed circuit boards
8. STANDARDIZED INTERCONNECTION LOADS AND LEVELS:	
.RF Signal Load Impedance	50 ohm load plane
.Remote Control Cable Load Impedance	300 ohms (Twin lead cable)
.Audio Interface Load Impedance	600 ohms
Level for rated output	0 dBm
.Squelch Flag	Sq Flag[1]
Unsquelched	Less than 0.7 V DC
Squelched	More than 7 V DC

Table I. - General system specifications -- Con.

.Key Transmitter Command (PTT)	Trans Key Less than 0.7 V DC
.Tuning Command	F1 → F2 Trans Less than 0.7 V DC
.RCC Unit	DC Command
DC Command	More than 7 V DC into 300 ohms
Tone	More than 4 V rm into 300 ohms
9. PERMISSIBILITY:	Vest per UL 913 and MSHA CFR, Title 30, Part 23
10. CABLING & CONNECTORS:	
.Remote Control (RC) Cable	2 Conductors
.RF Signal (RS) Cable	3 Conductors, Type SO with connector
.Remote Control Head (RCH) Cable	7 Conductors, Type SO with connector
.12 V DC Power Cable	2 Conductors, Type SO with connector
11. VEHICULAR TRANSCEIVER HAZARD PREVENTION:	Every metal transceiver must be grounded to vehicular frame ground.
.Vehicular Transcever Power Supply	Installation of a transceiver on vehicles with floating primary battery sources and DC motors requires mandatory use of isolated DC to DC converter to supply power to the transceiver

[1]Underlined Command Symbol indicates that signal must go low (sink 100 MA of current).

STANDARD MODULE SPECIFICATIONS

The standard module specifications are given in table J. The modules used in the radio system were provided as proprietary products by the Mine Safety Appliances Company (MSA). The modules are of the plug in type; this allows them to be easily serviced and interchanged.

TABLE J. - Standard module specifications.

1. RECEIVER SPECIFICATIONS:

.PC Board Symbol	A1
.MSA Part Number	D468179
.Frequency Range	60 to 1000 kHz
.Sensitivity	1 microvolt 12 dB Sinad
.Spurious Response Rejection	
Image	Better than 90 dB
IF	Better than 60 dB
	No other responses
Audio Output Transceivers	0 dBm into 600 ohms for 2.5 kHz peak deviation signal (Fm = 1 kHz)
.Squelch Threshold	1 microvolt
.Audio Output Power	0 dBm
.Hum and Noise Squelched	45 dB below rated audio output power
Unsquelched	40 dB

2. SYNTHESIZER SPECIFICATIONS:

.PC Board Symbol	A2
.MSA Part Number	D468180
.Frequency Range	60 to 1000 kHz
.Tuning Increment	5 kHz
.Peak Deviation	± 2.5 kHz for 0 dBM audio input (A2) signal

Table J. - Standard module specifications -- Con.

3. EXCITER:

.PC Board Symbol	A3
.MSA Part Number	D468178
.Output Power	200 mW (adjustable)
.Power Flatness	± 1/2 dB 60 to 1000 kHz

4. RF POWER AMPLIFIER:

.PC Board Symbol	A4
.MSA Part Number	D468183
.Output Power	20 Watts (adjustable)
.Power Flatness	1 dB 60 to 1000 kHz
.Load VSWR	
Operating	3.1
Momentary	Open or short ckt.

5. AUDIO POWER AMPLIFIER

.PC Board Symbol	A5
.MSA Part Number	D468184
.Output Power	5 Watts

6. BATTERY PACK SPECIFICATIONS:

Transceiver Standby-

.Type	Sealed lead acid
.Voltage	12 V DC
.Rating	5 Ampere-hour
.Usage	8 hours (R/T - 10/90)

BASE STATION AND VEHICULAR TRANSCEIVER SPECIFICATIONS

Both the fixed location base station and mobile vehicular transceiver use the standard transceiver specifications in table K.

The remote audio head permits a standard transceiver to be installed on any desired vehicle. It uses a remote control

head cable to interface with the transceiver. The head is mounted on the vehicle in a convenient location for the operator.

The standard transceiver operates as a base station with the use of a remote control terminal. This terminal is mounted on the rib next to the transceiver and uses the remote control head cable to interface with the transceiver.

Both the remote control head and remote control terminal can be plugged into the transceiver without making any adjustments.

Standard Transceiver

The standard transceiver specifications are given in table K. The block diagram is illustrated in figure 6-1. The control board (A11) is the mother board for the printed circuit modules - receiver (A1), synthesizer (A2), exciter (A3) and RF power amplifier (A4). This board determines the operational characteristics of the transceiver.[11]

Recovered audio signals (audio out-A1) from the receiver (A1) are applied to the noise operated squelch network on the Control Board (A11). Audio signals (audio input-A2) from the microphone are connected through printed circuit wiring on the A11 board to the input terminal of the signal

[11] A similar board (A11R) is used to construct a repeater transceiver.

processor network on the synthesize board (A2). After processing, the audio signal modulates the digital synthesizer local oscillator (LO) output signal frequency.

The power connector is used to supply DC power to the transceiver. The microphone push to talk (PTT) switch generates a standard transmitter key command. The Trans Key command turns on the transmitter by switching on the DC power to the RF power amplifier (A4) and turns off the receiver (A1) by switching off the receiver DC power.

The standard transmit frequency select command F1 → F2 (Trans) causes the A11 board to generate a digital binary frequency code to tune the synthesizer to the frequency F2. In the absence of F1 → F2 (Trans) command, the synthesizer is always tuned to the frequency F1.

The transmit frequency select command F1 → F2 (Trans) also appears at the RF connector and is used to tune either the antenna or coupler to the frequency F2.

The noise operated squelch network generates the standard squelch flag (SQ Flag) signal.

The A11 board uses relay switching to direct RF signals to the receiver in the receiving mode and to send RF power amplifier signals to the RF signal connector. Connectors for the remote control head (RCH), 12 V DC power, and RF signal are located on the transceiver case.

TABLE K. - Standard transceiver specifications.

1. USE:	Universal transceiver for use as either a base station or vehicular transceiver
2. OUTPUT POWER:	1 to 20 Watts (adjustable)
3. RF OUTPUT LOAD:	Optimized to drive loop antenna, 200 ohm transmission line or RF line coupler
4. POWER REQUIREMENTS:	
.Operating Voltage Range	11 to 15 VDC
.Demand Current	
Receiving Standby	35 mA (maximum)
Receiving Audio	300 mA (maximum)
Transmit	3.5 Amperes
5. ELECTRICAL SPECIFICATIONS:	
.Receiver	A1 standard module specifications
.Synthesizer	A2 standard module specifications
.Exciter	A3 standard module specifications
.Transmitter	A4 standard module specifications
.Audio Power Amplifier	A5 standard module specifications
6. CONNECTORS:	
.RF Signal	Pin No.
RF Output	1
Frame Ground	2
F1 → F2 (Trans)	3
.12 V DC Power[1,2] (base station application)	
12 V DC	1
Ground	2

Table k. - Standard transceiver specifications -- Con.

.Remote Control Head

SQ Flag	7
F1 → F2 (Trans)	6
Audio Output (A1)	5
Audio Input (A2)	4
Trans Key	3
12 V DC	2
Frame Ground	1

[1] Enclosure hardware grounded to Pin 2.

[2] 12 V DC power supplied through remote control head connector in base station application.

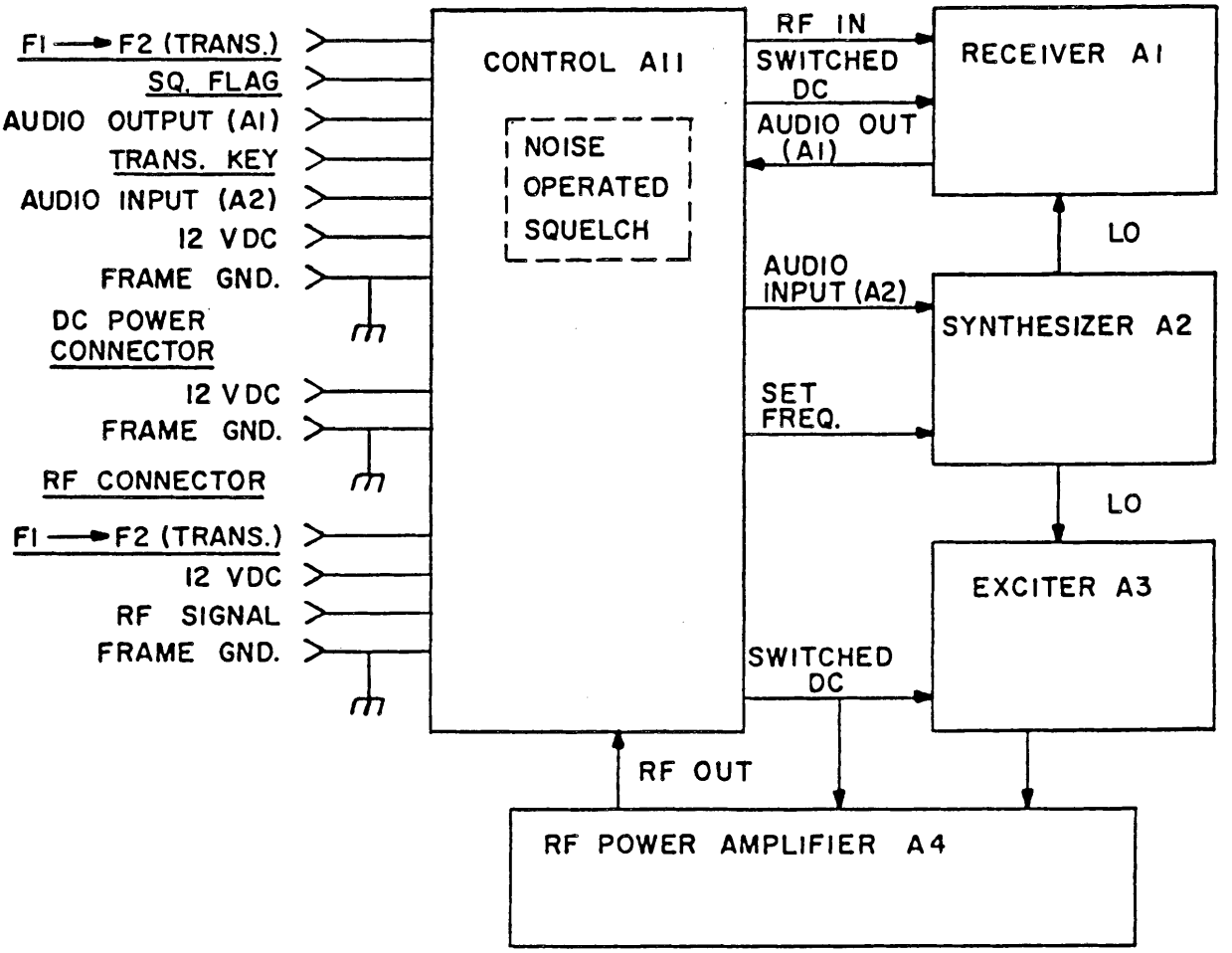

FIGURE 6-1. - Base station and vehicular transceiver block diagram.

Remote Control Terminal (RCT) Unit

The remote control terminal specifications are given in table L. The block diagram is illustrated in figure 6-2. The RCT unit includes the AC to DC converter and standby battery for the base station. The unit is used when the standard transceiver is operated as a base station. The remote control cable is connected to the RCT unit line matching transformer terminals. The transformers cancel unwanted common mode signals and pass legitimate differential mode signals. The legitimate signals are: audio baseband (voice) signals, DC command signals, and subaudible control signals.

Any remote control cable DC command signal is detected by the DC decoder. The decoder generates the Trans Key command, keying base station transmissions at the frequency (F1). Any transceiver squelch flag command (SQ Flag) causes the DC encoder to generate a DC command signal (DC Comd) and apply it to the remote control cable. This allows the base station to key any other base station (or repeater) in the network. It also enables the control centers remote control console units to receive audio base band messages recovered in the base station receiver. Any subaudible tone on the remote control cable is decoded generating the F1 → F2 (Trans) command. This permits the remote control console unit to remotely switch the base station to the transmit frequency (F2). In this mode of operation, the base station

can acquire any global repeater. Any remote control console unit can be used to talk through a stand alone global repeater to an out of range mobile transceiver.

TABLE L. - Remote control terminal (RCT) specifications.

1. USE:	Used with standard transceivers and repeaters to provide remote control(wire-line) capabilities from the remote control terminal unit
2. STANDARD LOADS:	
.RC Cable	300 ohms
.Transceiver Audio	600 ohms
3. AC POWER SOURCE:	
.AC	117 V AC
4. DC OUTPUT:	
.Operating Voltage	12 to 14 V DC
.Regulation	2 percent
.Over Shoot	Max voltage 16 V DC
5. DEMAND CURRENT:	
.Receiving Standby	40 mA (minimum)
.Transmit	4 amperes
.Standby Battery	Lead acid, 5 AH capacity
6. CONNECTORS:	
.RC Cable	Type
.Remote Control Head	

	Pin No.
SQ Flag	7
F1 → F2 (Trans)	6
Audio Output (A1)	5
Audio Input (A2)	4
Trans Key	3
12 V DC	2
Frame Ground	1

Table L. - Remote control terminal (RCT) specifications — Con.

7. ENCLOSURE:	Sealed enclosure
8. SIGNALLING:	
.Remote Control Socket	RC cable
SQ Flag	DC comd
.0 dB Audio Output (A1)	3 V AC (RMS)
Trans Key	DC Comd (3 V DC minimum)
.F1 F2 (Trans)	100 Hz signal 1/2 V AC rms (minimum)
.Audio Input (A1) 0 dBM	1 V AC rms

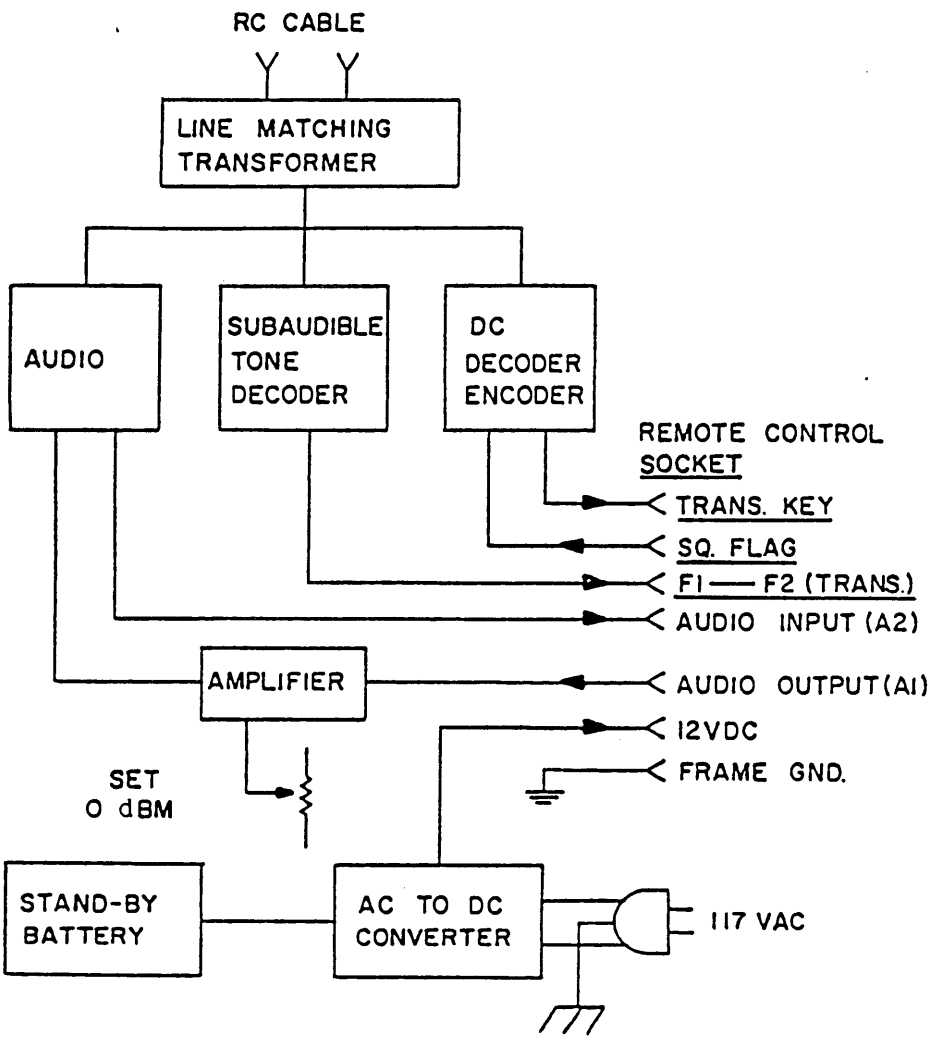

FIGURE 6-2. - Remote control terminal (RCT) block diagram.

Remote Audio Control Head (RCH)

The remote audio control head specifications are given in table M. The block diagram is illustrated in figure 6-3.

The remote audio control head is enclosed in a sealed box, obtaining its DC power from the transceiver. The Audio Power Amplifier (A5) is controlled by the SQ Flag command. The amplifier and message lamp turn on when the transceiver is unsquelched by a received radio signal.

Microphone audio input signals are transferred directly to the remote control socket. The push to talk (PTT) switch signals become Trans Key commands.

The F1/F2 switch position F2 generates the F1 → F2 (Trans) command.

TABLE M. - Remote control head (RCH) specifications.

1. USE:	Used with standard transceiver to allow convenient transceiver operation by motorman
2. STANDARD LOADS:	
.Transceiver Audio	600 ohms
3. DC SUPPLY:	
.Operating Voltage	12 V DC
.Demand Current	
Standby	5 mA (minimum)
Full Audio	250 mA (maximum)
4. CONTROLS:	
.Audio Output Level	Volume control
.Push to Talk	On microphone
.F1 → F2 (Trans)	SPDT Switch

Table M. - Remote control head (RCH) specifications -- Con.

5. CONNECTORS:

.Microphone

	Pins
Microphone	1
Ground	2
PTT Switch	3

6. REMOTE CONTROL SOCKET:

.SQ Flag	7
.F1 → F2 (Trans	6
.Audio Output (A1)	5
.Audio Input (A2)	4
.Trans Key	3
.12 V DC	2
.Frame Ground	1

7. SIGNALLING:

.Remote Control Socket	RCH unit
SQ Flag	Enables audio
Trans Key	Depress PTT
F1 → F2 (Trans)	F1/F2 to F2
SQ Flag	Message lamp on

8. ENCLOSURE: Sealed case

REMOTE CONTROL CONSOLE (RCC)

The remote control console specifications are given in table N. The block diagram is illustrated in figure 6-4.

Depressing the PTT switch transfers the standard DC command (DC Comd) onto the remote control cable. Microphone voice messages are simultaneously applied to the cable.

Depressing the F2 switch generates a 100 Hz subaudible tone. The tone is applied to the radio frequency (RF) cable

to command the base station to the transmit frequency (F2). This allows the base to acquire the global repeater for F1 transmissions to an otherwise out of range mobile transceiver.

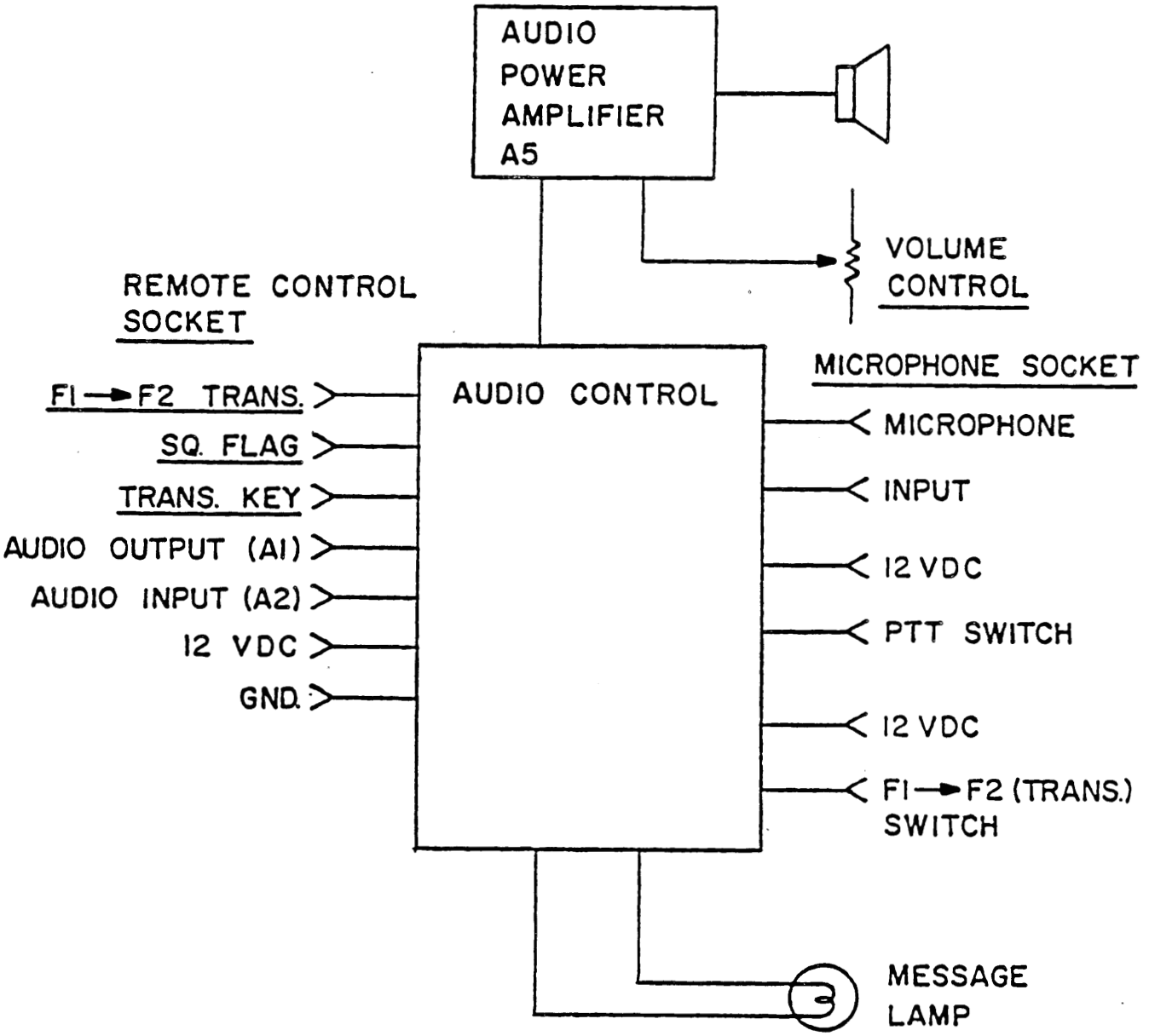

FIGURE 6-3. - Remote control head (RCH) block diagram.

Table N. - Remote control console (RCC) specifications.

1. USE:	Used in the mining complex control centers to generate remote control signalling
2. STANDARD LOAD:	
.RC Cable	300 ohms
3. AC POWER:	
.AC	117 V AC
4. STANDBY BATTERY:	12 V lantern battery
5. CONNECTOR:	
.Microphone	Type Mil
.RC Cable	Type
6. SIGNALLING:	
.Depressing F2 Switch	Generates 100 Hz ±20 Hz
.Depressing PAGE Switch	Generates 1000 Hz ±100 Hz tone and DC Comd
.Depressing PTT Switch	DC Comd
7. ENCLOSURE:	Sealed enclosure

VEST TRANSCEIVER SPECIFICATIONS

The vest transceiver electrical specifications are given in table O. The block diagram is illustrated in figure 6-5. These specifications are similar to the standard transceiver specifications with the following exceptions:

. The RF output power is limited to 4 Watts, preventing the transceiver magnetic moment (M) from exceeding the

safe limit of 2.5 ampere turn meter (8) (10). The design includes tone signalling capabilities of 100 and 1000 Hz.

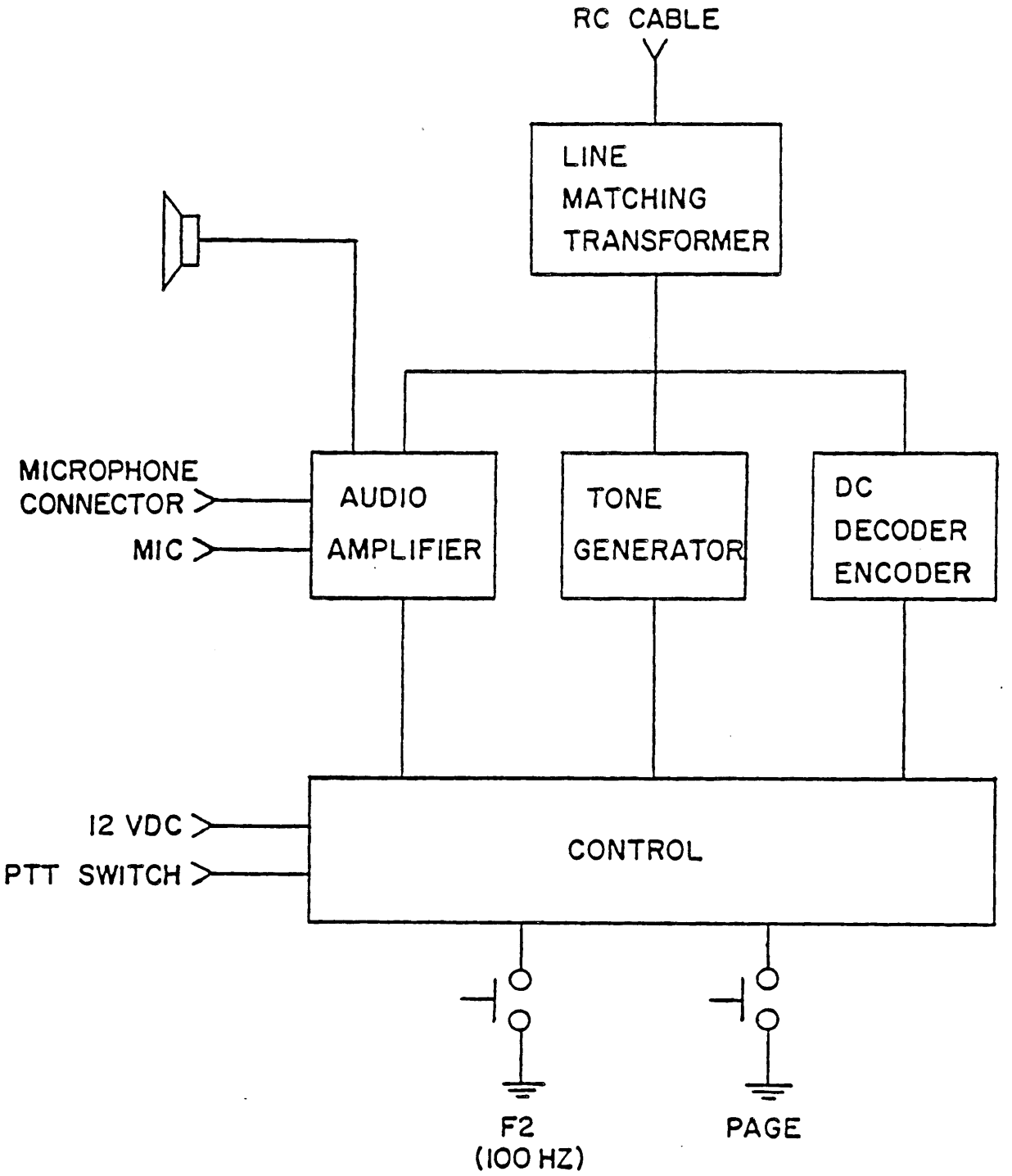

FIGURE 6-4. - Remote control console (RCC) block diagram.

- The transceiver modules are designed for use in hazardous atmospheres per Underwriters Laboratory Document UL 913 (and MSHA requirements).

The receiver, synthesizer, transmitter, antenna, and battery pack plug into a wiring harness that includes the speakers and control head. Maintenance requires troubleshooting to the module level.

The tuned loop antenna module includes an F1/F2 switch. Depressing the switch generates the F1 → F2 (Trans) command. This tunes the synthesizer to the frequency (F2) and keys the transmitter module (A3).

The transmitter is keyed to the frequency (F1) by depressing either the PTT or SIGNAL switch on the control head. The receiver is always tuned to the frequency (F1). Depressing the PAGE switch keys the transmitter to the frequency (F2). This is used in cellular repeater switching (see chapter I).

The receiver (A1) module incorporates a noise operated squelch network. The recovered audio out (A1) signal is used to drive the dual epaulet speakers and the earphone jack. The receiver (A1) module plugs into the interconnecting harness.

The transmitter (A3) DC module incorporates the power and RF switching relay function.

TABLE O. - Vest transceiver specifications.

1. USE:	Transceiver for use by roving personnel
.Model	ART-29 Transceiver
2. RF OUTPUT LOAD:	Optimized to drive tuned loop antenna
3. POWER REQUIREMENTS:	
.Operating Voltage	11 V DC
.Demand Current	
Receiving Standby	20 mA (maximum)
Receiving Audio	260 mA (maximum)
Transmit	800 mA (maximum)
4. ENCLOSURE:	ABS plastic 2 1/2 x 5 1/2 x 1 inches (WLD) with D-subminiature connectors
5. GARMENT:	Nylon mesh with pockets for modules
6. WIRE HARNESS[1]:	Vest wiring harness including control head epaulet speakers, tuned loop connector, speaker jack and transceiver module connectors
7. ANTENNA MODULE:	
.Type	Tuned loop with sealed tuning unit Switch for F1 or F2 (Trans) command
.Magnetic Moment	2.1 ampere turn meter[2]
8. CONTROL HEAD FUNCTIONS:	
.Volume Control	Adjust speaker volume
.Squelch Control	Set threshold squelch
.Page Switch	Subaudible tone
.Signal Switch	100 Hz tone
.PTT Switch	Key transmitter

Table O. - Vest transceiver specifications -- Con.

9. RECEIVER MODULE:	
.Enclosure Symbol	Intrinsically safe A1 receiver ART-29 P/N 301C193
.Frequency Range	60 to 1000 kHz
.Sensitivity	1.0 microvolt 12 dB sinad
.Selectivity	
3 dB BW	10 kHz (minimum)
70 dB BW	22 kHz
.Two Signal Selectivity	65 dB (minimum)
.Spurious Response Rejector	
Image	Better than 90 dB
IF	Better than 60 dB
.Audio Output	0.4 Watt into 8 ohms
.Squelch	
Thresold	3.0 microvolt
Tight	10.0 microvolt
10. SYNTHESIZER MODULE:	
.Enclosure Symbol	Intrinsically safe A2 synthesizer ART-29 P/N 301C192
.Frequency Range	60 to 1000 kHz
.Tuning Increment	5 kHz
.Peak Deviation	± 2.5 kHz
11. TRANSMITTER MODULE:	
.Enclosure Symbol	Intrinsically safe A3 transmitter ART-29 P/N 301C194
.Output Power	4 Watts (adjustable)
.Power Flatness	1 dB
12. VEST ANTENNA MODULE:	
.Magnetic Moment	2.1 ampere turn meter^2
.Area	0.13 meter^2
.Switching	F1/F2 switching
13. PERMISSIBLE BATTERY PACK[1]:	
.Enclosure Symbol	Intrinsically safe APP-2 Nicad battery ART-29 Must be recharged in fresh air

Table O. - Vest transceiver specifications -- Con.

.Type	Nickel-cadmium battery with redundant current limiting circuits
.Output Voltage	11.7 V DC
.Capacity	500 mAH
.Maximum Instantaneous Peak Current	4.0 amperes (maximum)
.Foldback	2.5 amperes

14. STANDARD BATTERY PACK[2]:

.Enclosure Symbol	APP-1 Nicad Battery ART-29
.Type	Nicad battery
.Output Voltage	11.7 V DC
.Capacity	500 mAH
.Fuse	2A

[1]Wire harness for approved vest will not accept power from standard battery pack.

[2]Use only in non-gassy mines

The vest can only be used inby with an MSHA approved battery pack.

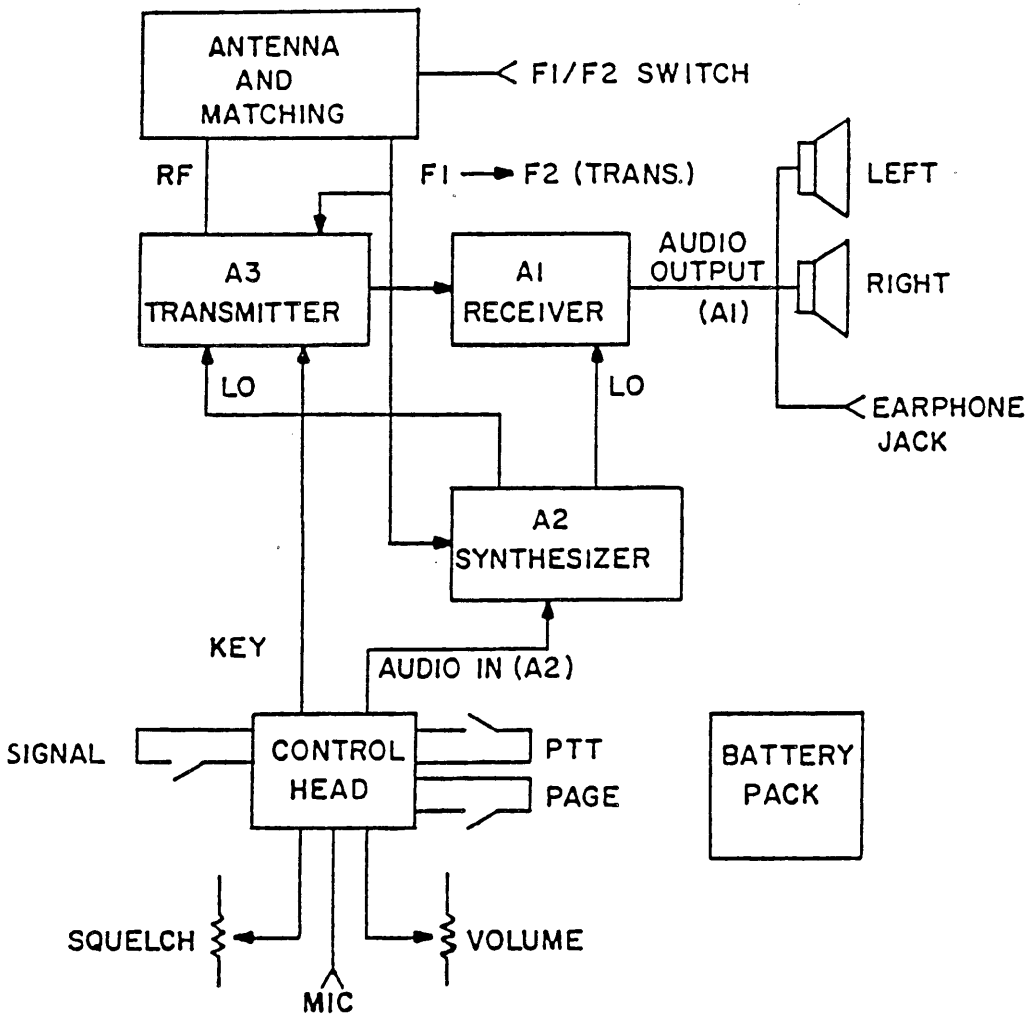

FIGURE 6-5. - Vest transceiver block diagram.

Permissible Battery Pack

Figure 6-6 illustrates the block diagram of the permissible battery pack (APP-2) for the vest transceiver. The battery current limiting circuitry meets the Intrinsically Safe Electrical Circuits and Application requirements for use in hazardous locations per Underwritiers Laboratory Document UL 913.

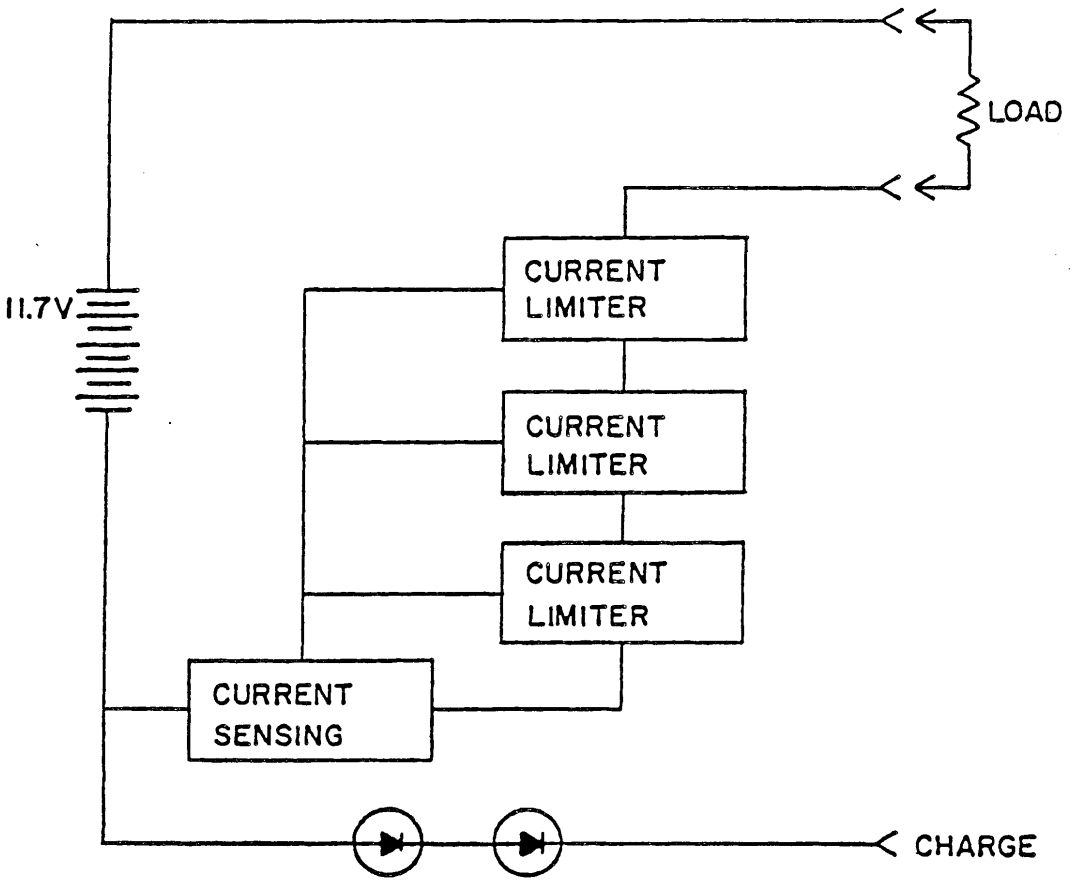

Figure 6-6. - Permissible battery pack block diagram.

The battery pack at 11.7 V DC is limited to supplying less than 5 amperes instantaneously or continuously at any accessible terminal. The pack consists of an 11.7 V DC, 500 mAH rechargeable nickel-cadmium battery with double redundant current limiting circuits. The pack is potted and sealed in an ABS plastic case.

The circuit consists of three independent current limiting circuits in series but sharing one common sensing resistor. When the pack is in overload condition, fold-back condition occurs essentially disconnecting the battery from the load.

The circuit is reset by simply removing the short or load then reapplying the load.

ART-29 Vest Transceiver

Figure 6-7 illustrates an individual wearing the vest transceiver. Figure 6-8 shows how the tuned loop antenna is internally sewn into the back of the vest. The vest includes transceiver modules and speaker assemblies.

FIGURE 6-7. - Vest transceiver.

The transceiver modules are enclosed in special pockets in the vest and interconnected by a wire harness. A pair of epaulet speakers are enclosed in vest pockets located on the shoulder. The speakers are oriented to direct sound waves toward the miner's ears. The vest is designed with Velcro fasteners to enable the wire harness and all modules to be easily removed so the vest can be cleaned.

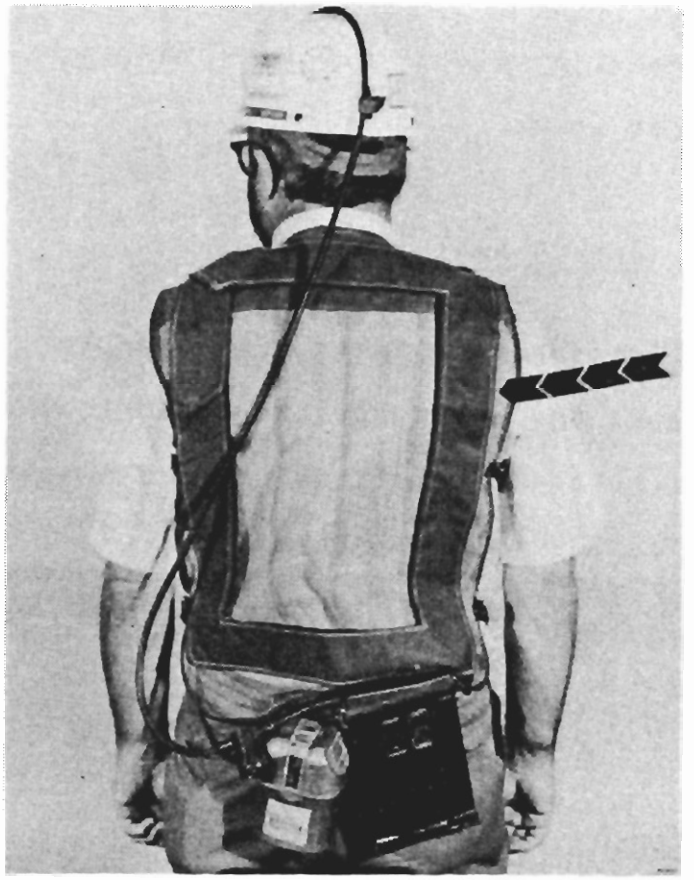

FIGURE 6-8. - Internal tuned loop antenna sewn into the back of the vest in such a way that it is not exposed.

REPEATER TRANSCEIVER SPECIFICATIONS

The electrical specifications of the global and cellular repeaters are identical. The specifications are also similar to the standard transceiver specifications because they use the same radio circuit modules with the exception of the A11R control board. Specifications for the repeater transceiver are given in table K (the standard transceiver specification table). Figure 6-9 illustrates the repeater block diagram.

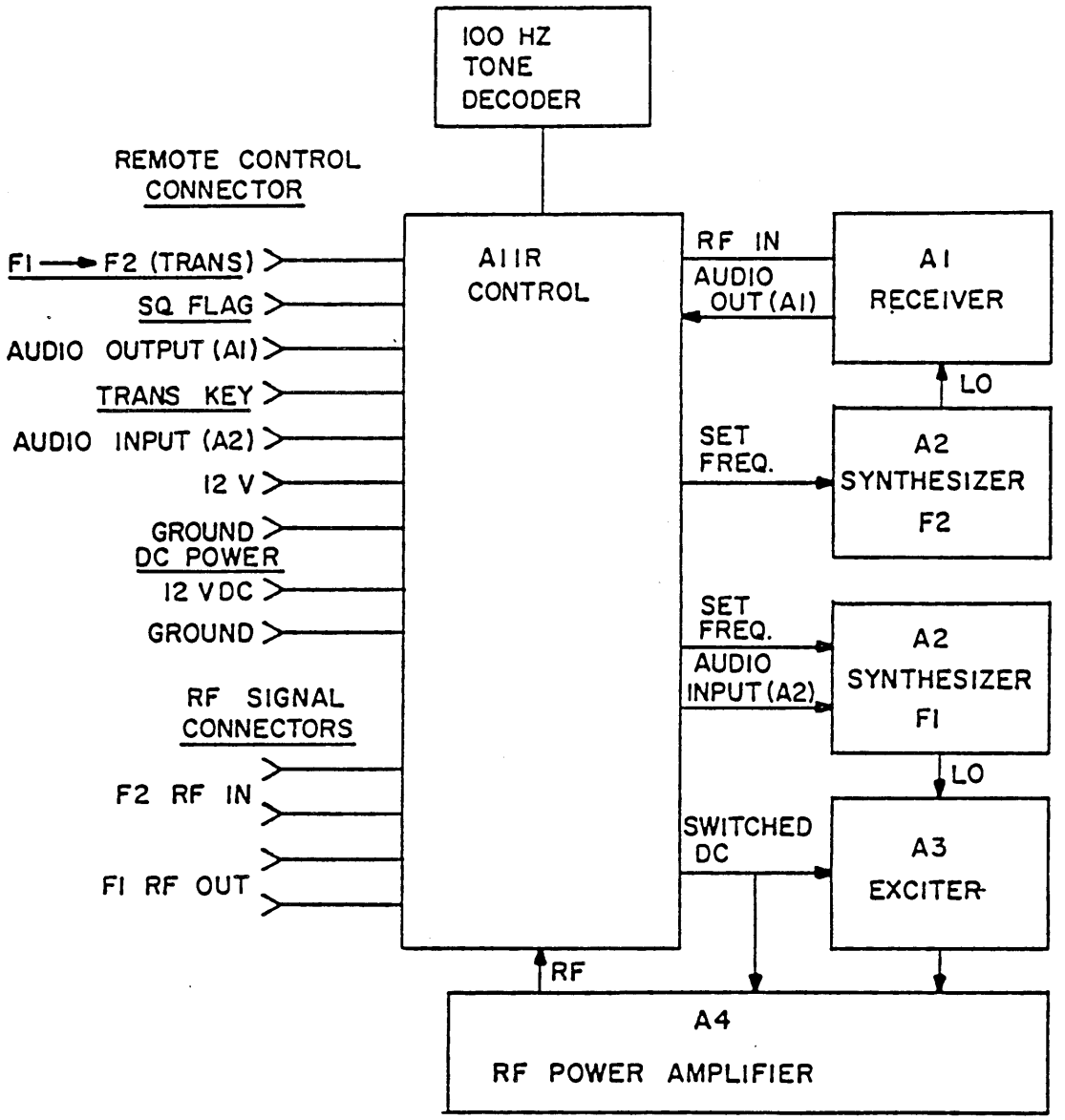

FIGURE 6-9. - Repeater transceiver block diagram.

The A11R is the mother board for the A1, A2, A3 and A4 modules. The A11R control board connects the RF power amplifier (A4) output directly to the RF output connector. In signal, the RF is connected directly to the receiver (A1) input circuits.

The repeater incorporates two synthesizer (A2) PC boards to enable a simplex/half duplex mode of operation. F2 RF input signals are received and demodulated by the receiver (A1). Simultaneously, the recovered audio output (A1) signal is applied through the A11R board to the synthesizer (A2, F1). This signal (audio input (A2)) frequency modulates the synthesizer low signal. The exciter (A3) and RF power amplifier (A4) increase the modulated signal power to 20 Watts and transmit F1 signals.

To conserve standby power, the A11R includes a noise operated squelch network. This network keys the exciter and RF transmitter on, when an RF signal is applied to the receiver input terminals.

The A11R board also includes a 100 Hz tone decoder. Unlike the A11 board, the tone decoder generates the SQ Flag command signal.

The remote control terminal unit can be directly interconnected with the repeater by a standard remote control head cable.

The repeater receives its DC power from the standard system AC to DC converter which also includes a standby battery.

RF LINE COUPLER AND ANTENNA SPECIFICATIONS

RF line coupler specifications are given in table P. The RF line coupler is used with the base station and repeater

transceiver. The global repeater uses two RF line couplers to couple MF signals to the wireplant.

Antenna specifications are given in table Q. Tuned loop antennas are used with vehicular transceivers and cellular repeaters.

TABLE P. - RF line coupler specifications.

Type	Clamp type toroidal design
Part Number	
4" inside diameter	ACU-10-4
1" inside diameter	ACU-10-1
Transfer Impedance (Z)	
ACU-10-1	
350 kHz	10.0 ohms
520 kHz	11.2 ohms
820 kHz	17.8 ohms
ACU-10-4	
520 kHz	4.0 ohms
Dielectric withstanding voltage (cable to coupler frame and inductor winding)	15,000 V (minimum) Insulated

TABLE Q. - Antenna specifications.

Type	Twin-loop design
Enclosure	Lexan
Finish	Non-reflecting black
Magnetic Moment	4.0 ATM2 (minimum)
Physical size	14 inches high 28 inches long

VII. FIELD EVALUATIONS

INTRODUCTION

MF equipment was installed and evaluated in the following four underground mines:

* Star Point Mine

  Plateau Mining Company
  Price, Utah

  Mining Method:
  Continuous Mining and development for longwall with conveyor belt haulage of approximately 1 MTPY.

* San Manuel Mine (MAGMA)

  Magma Copper Company
  Subsidiary of Newmont Mining Corporation
  San Manuel Division
  San Manuel, Arizona

  Mining Method:
  Multiple level blockcave mining with rail haulage of 67,000 tons per day.

* Escalante Silver Mine

  Redco Silver Mining Company
  A subsidiary of
  Rancher Exploration and Development Company
  Enterprise, Utah

  Mining Method:
  Vertical crater retreat mining using diesel truck haulage up a decline of 500 tpd.

* York Canyon Mine

  Kaiser Steel Company
  Raton, New Mexico

  Mining Method:
  Continuous mining and development for longwall with conveyer belt haulage of 1MTPY.

The location of the mines are shown in figure 7-1.

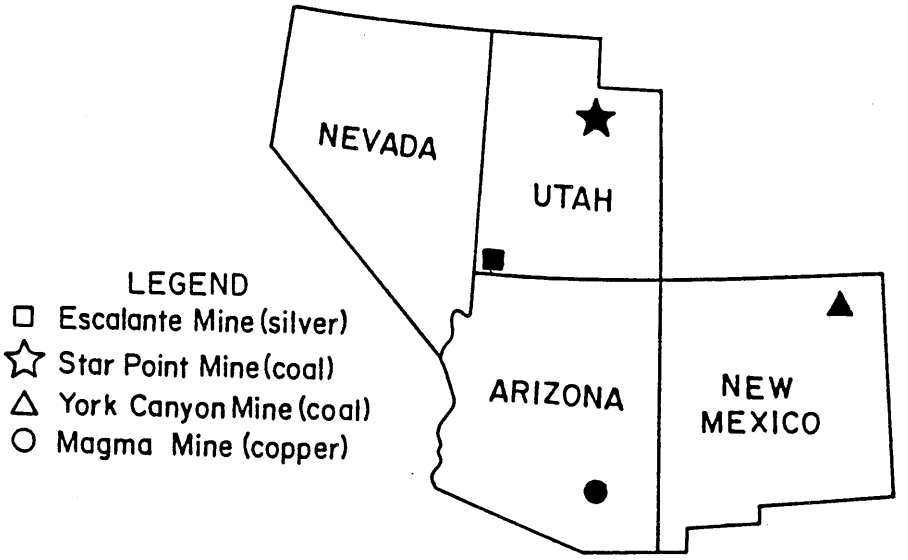

COOPERATING MINES

FIGURE 7-1. - Field test locations.

The installed MF communication systems were evaluated over a period of 6 to 12 months. During the installation and evaluation periods, extensive tests were conducted. This chapter describes the results of these tests.

SAN MANUEL COPPER MINE (MAGMA)

This mine is located north of Tucson near San Manuel, Arizona. The mining complex includes smelter, surface ore loading and rail transportation facilities, and an underground blockcaving mine. The San Manuel ore body is a large chalcopyrite mineralization which has been deposited as an elliptical, hollow cylindrical shell. The interior of the cylindrical ore shell is a marginally mineralized zone of

monzonite porphyry rock showing K-Feldspar Biotite alteration. The thickness of the elliptical ore shell (as defined by a 0.5 percent copper cutoff) varies from 100 to 1,000 ft. The entire system of mineralization-alteration of which the ore shell is a part is known to have a longitudinal dimension of some 8,000 ft with major and minor cross-sectional axes of about 5,000 and 2,500 ft, respectively.

The blockcave mining method is used to recover more than 60,000 tons of copper ore (muck) per day from three blocks in the ore body. The mining method is illustrated in figure 7-2.

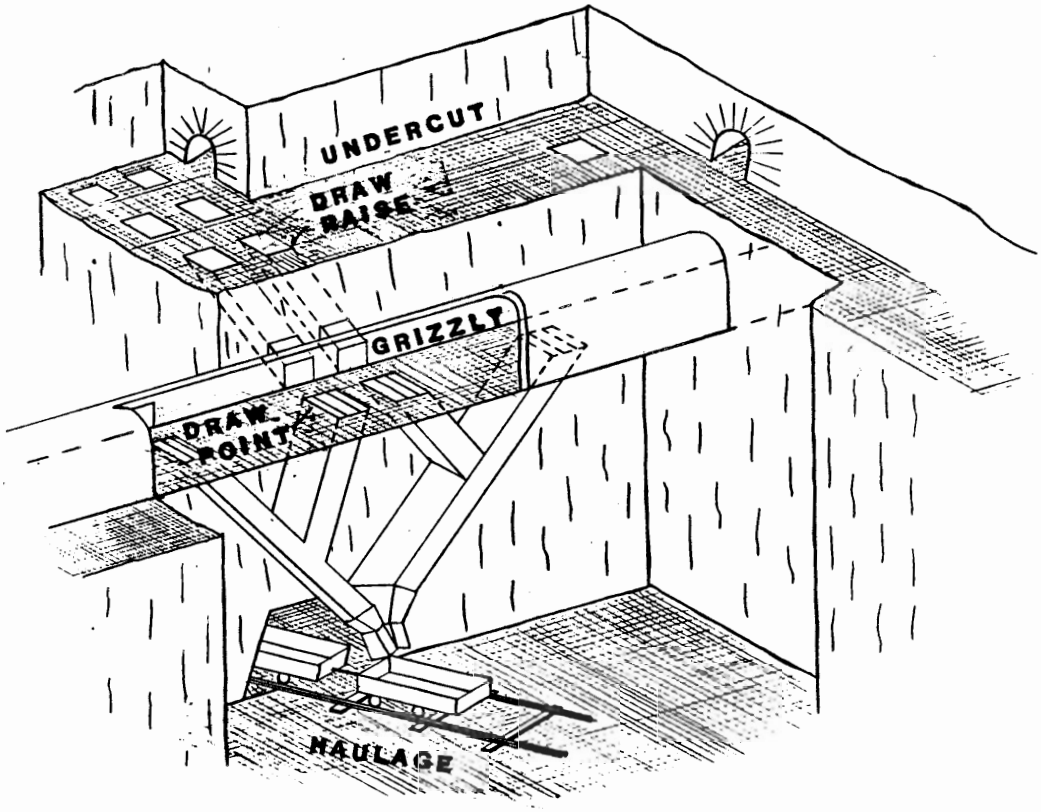

FIGURE 7-2. - Isometric diagram of the blockcave mining method.

Blockcave mining simultaneously occurs in three blocks in the ore body. The majority of the production comes from the mining block associated with 2315 grizzly and 2375 haulage levels. Mining is being completed on the 2015 grizzly and 2075 haulage levels. The 2615 grizzly and 2675 levels are in the developmental stages.

During development, undercut drifts are driven into the ore body as illustrated in figure 7-2. From the undercut drifts, the ore body is drilled producing a radial drilling pattern that is perpendicular to the heading of the drift. The pattern is replicated on 4 ft centers along the drift. The drill holes are then loaded with explosive charges. Detonation of the charges rubblizes a local zone of the ore block. The ore (muck) flows by gravity down draw raises to the grizzly level drifts. Large boulders in the muck are fractured with sledge hammers and forced to flow through steel rail grates at each grizzly level draw point. From the draw point muck flows down the transfer raises to the haulage drifts on the production level. The flow process continually grinds and reduces the size of the material. The transfer raises are designed to be holding bins for the muck. The bottom of each raise is closed by an air powered gate. Figure 7-3, illustrates the location of the gate and the train loading process. Eight or more transfer raises intersect each train loading panel. Multiple panels lie under the ore body.

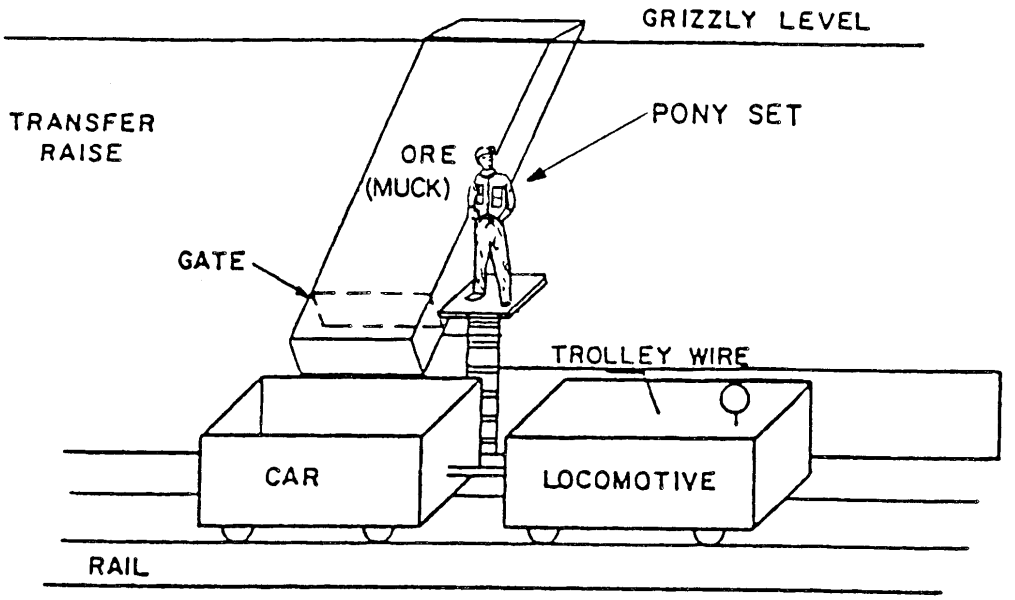

FIGURE 7-3. - Train loading.

A trolley-powered locomotive is used to maneuver train cars below the transfer raise gate. Train loading personnel (loaders) stand in the pony set (the space above the loading gate) and use the gate to control muck flow into the train cars. The loaders signal the motorman to move the train forward after each car is loaded. The signalling is done with incandescent lamps in the panel. After all cars in the train are loaded, the train leaves the panel and enters the main haulage track. Figure 7-4 illustrates the planeview of track installed on the 2375 haulage level. Similar rail systems are installed on the other two haulage levels. The loaded train proceeds along the north haulage track to the unloading area called the pocket. While moving through the pocket area, the trains are automatically unloaded into muck storage bins directly below the track. The unloaded trains

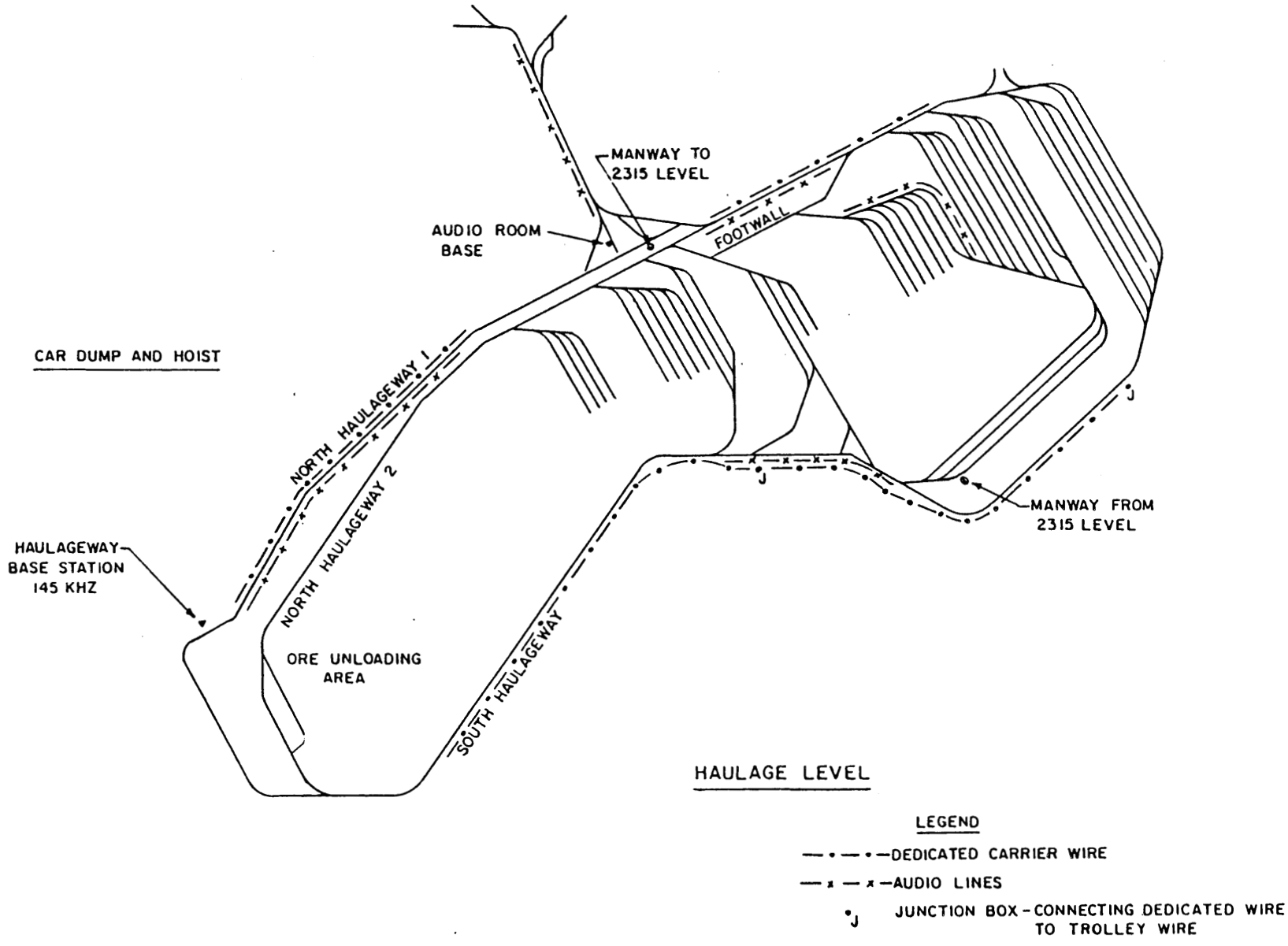

FIGURE 7-4. - Planeview of track installed on 2375 haulage level.

proceed along the south haulageway to an assigned production panel. As many as 15 trains are used in the haulage system. In addition to these trains battery powered locomotives are used as service vehicles in the mine.

Seven hoist systems are used in support of the underground mining operation. The hoist head frames are illustrated in figure 7-5.

The hoists used in the shaft are capable of manual or automatic operation. The systems transport rock from the development headings and muck from the pockets to the surface.

MAGMA's Initial Communications System

Haulage traffic is controlled by dispatchers in the surface control center who use trolley radios to communicate with train motormen and an audio system to communicate with supervisors on the grizzly and production levels. A hoist carrier current radio system provides communications in the shaft. Figure 7-5 illustrates the communication system.

The dash-x-line indicates the routing of the audio intercom system cabling in the mine. Remote audio heads (speaker symbol) are located at strategic locations in the grizzly and haulageway drifts. Each head includes a microphone, speaker, and push-to-talk switch. A four conductor cable

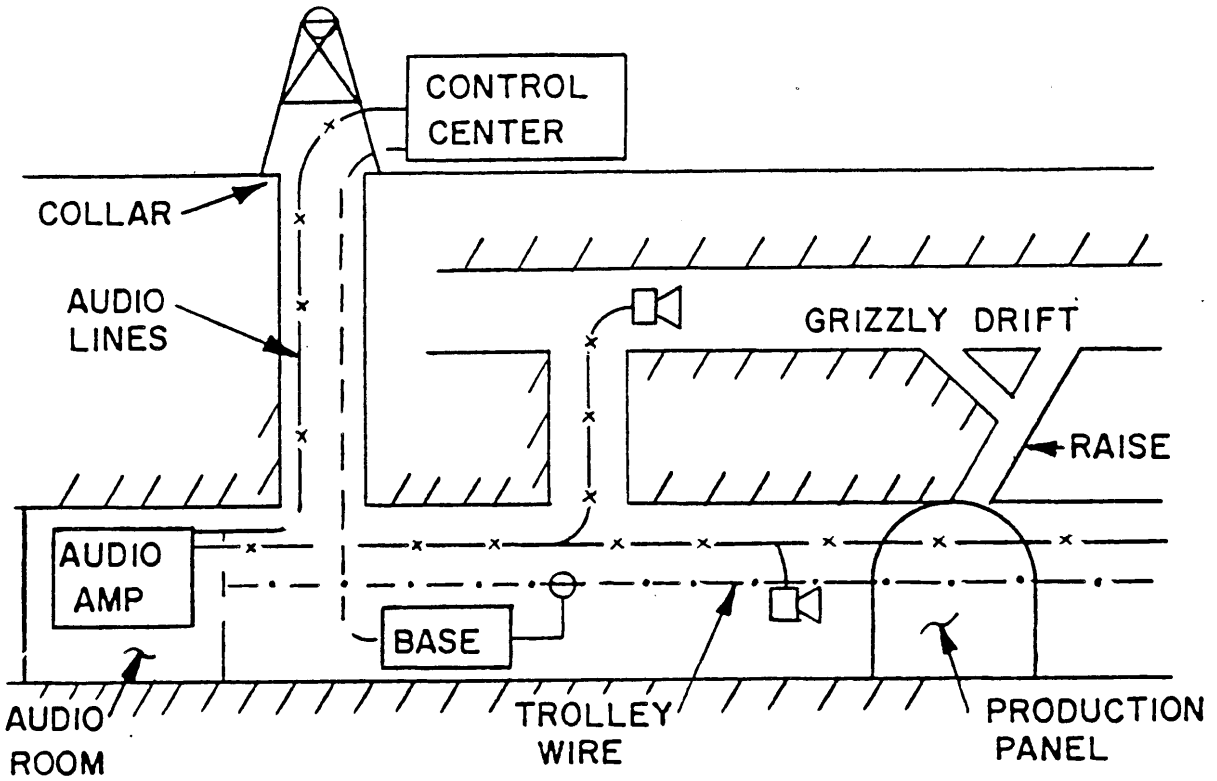

FIGURE 7-5. - MAGMA's communications system.

connects each remote audio head to a control audio amplifier located in the audio room. Unlike a typical pager telephone system, audio signal amplification occurs in a central amplifier instead of the remote audio head. The intercom design features improve the audio system's reliability. Maintenance cost is reduced because batteries are not required in the remote heads. Roving supervisors on the grizzly and production levels use the audio system to coordinate muck haulage with the dispatcher in the surface control center. The mucking supervisors on the grizzly level use the system to communicate with the dispatcher and identify which transfer raises are being filled.

The dashed-dot-line indicates the routing of a dedicated wire pair that is used to distribute trolley signals in the main haulageway drifts. Trolley radio coverage is not acceptable along some incremental lengths of the haulageway. Poor radio coverage is caused by several mechanisms. The locations of poor radio coverage and their causes are:

- At locations where track bonding has degraded, a high impedance path for carrier current signals exists. This causes excessive attenuation of the signals.
- Near rectifiers where carrier current signals are shunted to ground. This prevents the signal from reaching the base station.
- At the far end of the mine where attenuation on long path lengths reduces the amplitude of the carrier signal below the threshold of the receiver.
- Signal propagation effects on the mine wiring that causes nulls in the carrier current signal along the haulageway conductors. The nulls are caused by standing waves on the wireplant.

The present trolley radio system uses dedicated cable as the means of signal distribution in the haulage drifts (along the dot-dash-line in figure 7-4). Series tuned filter networks (junction boxes in figure 7-4) are directly connected between the dedicated cable and the trolley bus at each

location of poor radio coverage. In spite of this, poor radio coverage areas still exist along the haulageway.

The dispatcher is a keyperson in haulage operations. Every tracked vehicle's location and status must be known at all times. The required information includes:

- Which transfer raises are full.
- Identification of the train which is being loaded in the panel.
- Identification and location of loaded trains on their way to the pocket.
- Identification and location of unloaded trains.
- Identification of trains out of service.
- Location of battery powered service vehicles.
- Changes in the orderly mining process.

To aid in the safe and efficient dispatching of track vehicles, miniature replicas of all vehicles are manually positioned on a scale model of the haulage system so the dispatcher can identify and track the location of each train and battery powered service vehicle on the haulage level. Figure 7-6 illustrates the scale model of the haulage system.

The dispatcher moves the replica of the vehicles in accordance with location information received from each motorman. To insure safety and minimize accidents on the haulageway, the dispatcher coordinates the trains' and service vehicles' movements while ensuring a minimum spacing is maintained between the vehicles. Production is improved when the

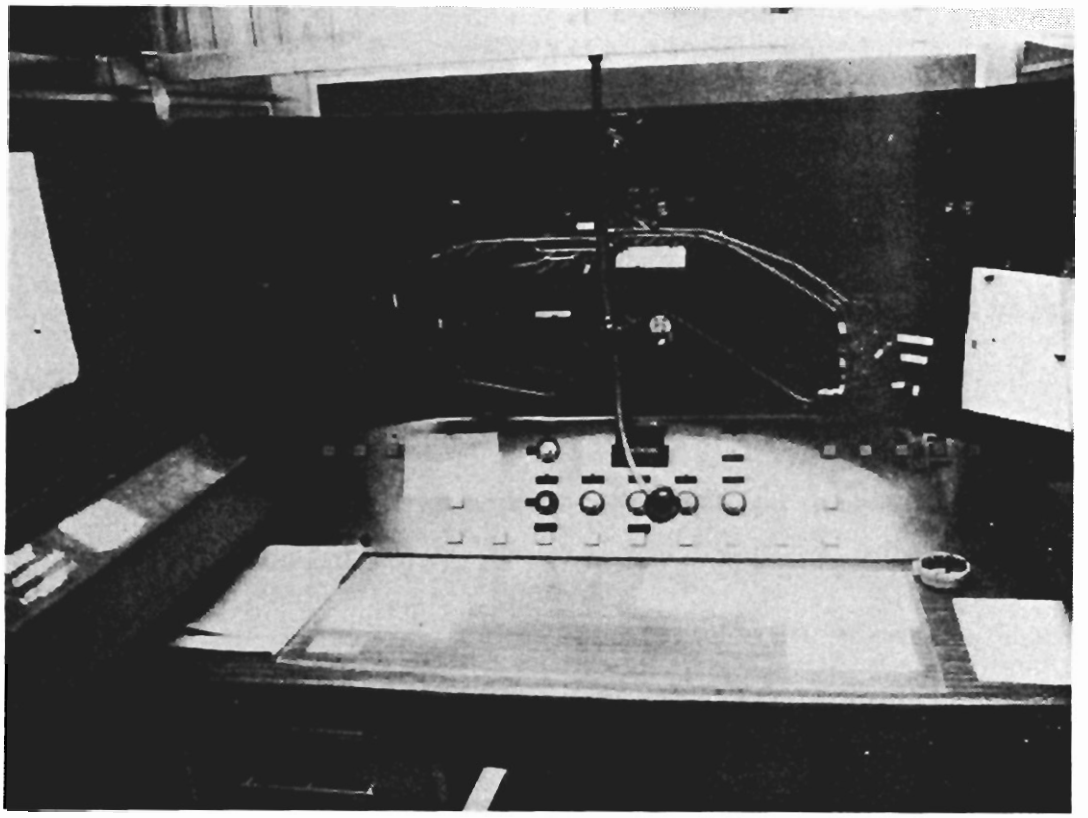

Figure 7-6. - Scale model of haulage system.

trains are optimally dispatched to panels with enough muck to fill all cars and when the muck is evenly drawn from the caved block. This requires information on the number of cars loaded from each transfer raise.

The hoist communications system has been difficult to maintain and improvements in its design are required. A tuned loop antenna at the sheave wheel is used to radiate the hoist wire rope. The wire rope is the communications signal path to a carrier current transceiver in the cage. The sheave wheel location of the antenna exposes maintenance personnel to risk of injury since they must climb the head frame to inspect and repair the antenna. On the cage, the

transceiver is electrically coupled to the wire rope by a direct electrical tap on the rope just above the cage. Coupling via the tap, the wire rope, and the surface antenna enables the communications link to be established between the hoistmen and miners in the cage.

Installation of MF Equipment

The MF radio system offered the potential for reducing the risk of injury and lowering mining cost. The system was expected to improve communications in the following areas:

- Provide a reliable communications link between battery powered vehicles and the dispatcher while vehicles were moving on the rail system.
- Eliminate poor communication areas along the rail haulage system.
- Provide radio coverage areas for roving supervisors on the grizzly and production levels.
- Improve communications in the Hoist system.
- Provide a radio communications link between the train loader and the motorman.

To improve the safety and efficiency of the haulage system, a communications link is needed between the dispatcher and motormen on battery powered vehicles. Although these locomotives have carrier current transceivers, the transceivers can only be used with a "stinger" (a pole with a capacitive coupling network that must be touched to the

trolley conductor to communicate).

An MF base station was installed on the haulage level and a vehicular antenna and transceiver were installed on battery powered vehicles to permit communication with the dispatcher while the train was in motion. The vehicular antennas and transceivers were evaluated in areas where communication was poor. The inductive coupling via tuned loop antennas induced signal currents on all nearby conductors. The conductors provided alternative signal paths instead of relying on current flow in high resistance paths (through bad rail bonds). Vest transceivers were also evaluated.

A production base station was installed on the haulage level so the dispatcher could be in constant contact with the vest users when they were near conductors. Furthermore, a repeater was installed on the grizzly level to extend the talk-back range to the haulage level base station.

MF was also tried in the shaft. The highly efficient MF antenna was installed to radiate the wire rope at the collar. This reduces risk because maintenance personnel do not have to climb the 200 ft headframe to service the antenna. An RF line coupler was installed above the cage to permit communications between cage and surface via the hoist rope. The vest was evaluated for shaft inspection use to provide a communications link to the hoistmen.

MF System Tests and Evaluation

With the advice and assistance of the mine communications group, a series of tests were carried out in the mine. Each test focused on improving a specific aspect of the mine's communication problems. In the test MF equipment was installed on the 2375 level of the mine and evaluated over a period of time. For example, vehicular transceivers were left in service for more than 12 months. The objective and results of each test follows.

Test No. 1 - Communications from Battery Powered Locomotives

The object of the test was to provide a reliable communications link from the dispatcher to motormen on moving vehicles. A base station was installed near the No. 5 shaft on the 2375 haulage level. The installation was made by coupling the base station to a dedicated carrier wire via a 1 inch RF line coupler. A vehicular antenna and transceiver were installed on a battery powered locomotive. For comparison purposes the motormen also wore a vest transceiver to communicate with the base station. All tests were made at 400 kHz.

The mine-generated noise and transmitted vehicular signal levels were measured at the base station location as the locomotive moved on the track. An RF line coupler was used as the coupling device between the dedicated wire and the field strength meter.

The recovered audio quality was measured. The tests were subjective and pegged to a listening scale of 0 to 10 as follows:

0 = no squelch break

1 = squelch barely broken - not audible

3 = speech approximately 80 percent audible with heavy noise

5 = speech audible with medium noise

8 = speech clear and audible with low noise

10 = speech clear - no noise

The test results are given in table R.

Table R. - Vest and vehicular communications to 5 shaft base station.

TEST NO.	LOCATION	NOISE LEVEL dB	1680 VEHICULAR SIG LEVEL	1680 VEHICULAR S/N dB	1680 VEHICULAR Audio Q	VEST SIG LEVEL	VEST S/N dB	VEST AUDIO Q	NOTES
1	3C departure	30	80	50	10	75	45	10	
2	3D departure	30	76	46	10	65	35	7	
3	Between 3D dep & 17 South	30	73	43	8	61	31	5	
4	17 S Crossover	30	70	40	8	60	30	3	
5	41B North	30	35	5	2	-	-	0	No carrier line
6	8A South	28	37	9	3	-	-	0	" " "
7	Footwall P11	28	50	22	7	-	-	0	" " "
8	10X NH2	28	50	22	7	-	-	0	" " "
9	5 North	28	52	24	8	35	7	3	
10	2 North	28	62	34	9	38	10	3	
11	20 North	28	58	30	7	52	24	5	
12	30 Crossover	28	52	24	8	43	15	4	
13	5 Shaft Turnout	28	53	25	8	59	31	6	

Summary:

The objectives of the test were met. Reliable communication was achieved from both trolley and battery powered locomotives anywhere in the haulage system. The carrier to noise ratio and communications signal quality were excellent except in areas which lacked a common line. This demonstrated that a dedicated cable extends radio coverage in a mine. The vehicular radio audio quality was acceptable in 12 of 13 test locations. The audio quality of the vest was not as good because of its lower magnetic moment; however, a repeater could improve the quality of vest communications in the mine.

Test No. 2 - Hoist Communications Test/Base Station in Hoist Control Center

A vehicular antenna was mounted in the hoist control room at shaft 3C with the antenna about 3 ft from the wire rope and about 8 ft from the wire rope drum. Figure 7-7 illustrates the hoist communications system.

The vehicular antenna was used with a field strength meter to measure noise and carrier signal at different locations of the cage in the shaft. A base station was located in the same area with a vehicular antenna mounted just ahead of the large antenna 3 ft from the rope. Another transceiver (battery powered) was mounted in the cage using a 4" coupler on the rope just above the bonnet. The test results are given in table S.

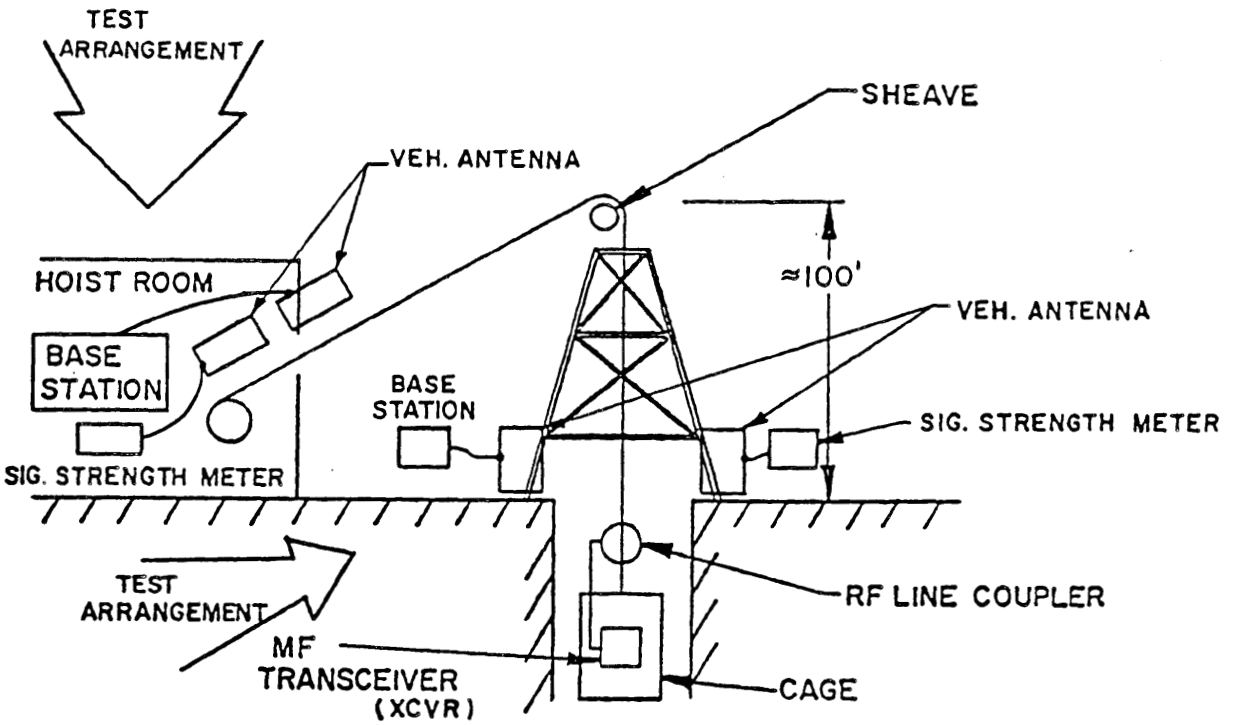

FIGURE 7-7. - Hoist communications system.

TABLE S. - Hoist communications signal level cage to base at the drum.

TEST NO.	CAGE LOCATION	NOISE LEVEL dB	SIG LEVEL	S/N dB	AUDIO QUALITY	COMMENTS
1	Collar	-5	35	40	10	
2	400' below collar	0	22	22	8	
3	1000' going down full speed	+3	45	42	10	
4	1500' going down full speed	+3	28	25	8	
5	2075' stopped	-3	25	28	8	
6	2675' going down	+3	29	26	8	
7	2750' pocket	-3	25	28	8	
8	2000' going up	+3	27	24	8	

Summary:

Good to excellent signals were obtained with no dead spots. A slight noise level was noted when the hoist was running.

Test No. 3 - Hoist Communication Test/Base Station at the Collar.

A vehicular antenna was mounted on the headframe at the collar about 3 ft from the cage rope. This antenna was used with the field strength meter to measure noise and carrier signal levels at different locations (elevations) in the shaft. A vehicular antenna was mounted on the headframe opposite the other antenna and was connected to the base station. The cage radio and coupler remained as in test 2. The results of the test are given in table T.

TABLE T. - Hoist communication signal levels cage to base at the collar.

TEST NO	CAGE LOCATION	NOISE LEVEL dB	SIGNAL LEVEL	S/N dB	AUDIO QUALITY	NOTES
1	Collar	-27	+85	112	10	Clear & Loud
2	400' moving down	-27	+82	109	10	" "
3	1000' moving down	-27	+80	107	10	" "
4	2015	-27	+81	108	10	" "
5	2675 moving down	-27	+86	113	10	" "
6	2675	-27	+85	112	10	" "

Summary:

This test showed the value of MF communications in the hoist area. The measured carrier signal to noise level ratios were large at all elevations in the shaft with the cage moving or stopped. This provided excellent C/N margins in the hoist communications system. At the hoist house and the collar locations, the signal propogation losses over the "sheave" wheel were found to range from 50 to 60 dB. The shaft contained various conductors (besides the hoist cable) which included power lines, pager lines, audio lines, and shaft signal lines. These lines were lashed in the corners of the shaft and contributed to the efficiency of the radio signal propagation.

Test No. 4 - Vest Communications to Audio Room Base Station from Grizzly and Production Levels

A base station was installed in the 2375 audio room. A 1 inch RF line coupler was clamped around the East or West audio cables emerging from the audio amplifier. A field strength meter was connected to a 4" RF line coupler clamped around the cable for measurement purposes. Signal levels were measured at the base as a vest transceiver transmitted from various locations in the mine. It should be noted that a trolley rectifier was also located in the audio room. The results from this testing are given in table U.

Summary:

This test demonstrates the potential performance and usefulness of the vest radio. Communications were acceptable to very good at 30 of the 33 locations tested. In general, good quality communications resulted when the roving miner was within 3 to 6 ft of the audio lines, and acceptable quality communication was obtained up to 50 feet from the audio lines. The vest received clear signals from the base even in areas where it could not transmit. The low quality signals received by the vest in tests 16, 17, and 18 occurred because nearby audio lines were not coupled to the lines at the base. Further, noise level variations and poor signal to noise tests resulted because the trolley rectifier was located in the audio room.

It was determined that with the installation of dedicated lines to "fill the gaps" nearly 100 percent communication coverage is possible; and with the use of a repeater, the talk-back range from the vest can be increased.

Conclusion

The tests at MAGMA show that MF equipment performs very well in a large multiple level mine.

Wherever local conductors exist, good coverage resulted, including up and down the hoist shaft. To some extent, the quality of communications depends on the continuity of the electrical conductors. If the continuity is good, good

communication can be achieved at distances up to 20 ft from the conductors in the mine. If the continuity is poor or non-existant, good communication can be achieved only within 7 ft of the electrical conductors.

TABLE U. - Vest transceiver communications to audio room base station (via 2315 and 2375 level audio cables)

TEST NO.	VEST LOCATION	NOISE LEVEL dB	SIGNAL LEVEL dB	S/N dB	AUDIO QUALITY	NOTES
1	2375 20 Crossover	36	60	24	10	Couplers on West audio cables routed on 2375 & past rectifier
2	N Haulage 2	36	59	23	9	
3	20 North	36	55	19	8	
4	Manway	36	67	31	8	
5	Raise	36	50	14	8	
6	Raise 50"	36	48	12	7	
7	Top Manway 2315	21	50	29	9	Couplers on East audio line - 2315 away from rectifier
8	NFD T.O.	21	55	34	9	
9	Panel 20	21	50	29	8	
10	Panel 18	21	47	26	8	
11	Panel 16 T.O.	20	41	21	6	
12	Panel 14 North	20	35	25	5	
13	Panel 12 N Lunchroom	18	50	32	9	
14	Panel 18 N	18	43	25	6	
15	Panel 4 N	18	38	20	5	
16	Panel 4 N 150 "	18	30	12	4	
17	Panel 2 N T.O.	18	32	14	4	
18	2 Panel 6 Line	18	27	9	3	

ESCALANTE SILVER MINE

The Redco Silver (Escalante Silver) Mine is owned and operated by Ranchers Exploration and Development Corp. The mine is located in Iron County (42 miles west of Cedar City)

Utah. The surface support facilities include a shop/warehouse building and ore handling and milling building.

The host rock are water-lain tuffaceous sediments of mid-tertiary age. The beds are composed of volcanic material with the composition of latite to rhyolite. The material is fine grained to conglomeratic, rounded to sub-rounded, and occurs in beds ranging from a few inches to 4 ft in thickness that dip 10 to 20 degrees to the southwest. A cross section of the ore body is shown in figure 7-8.

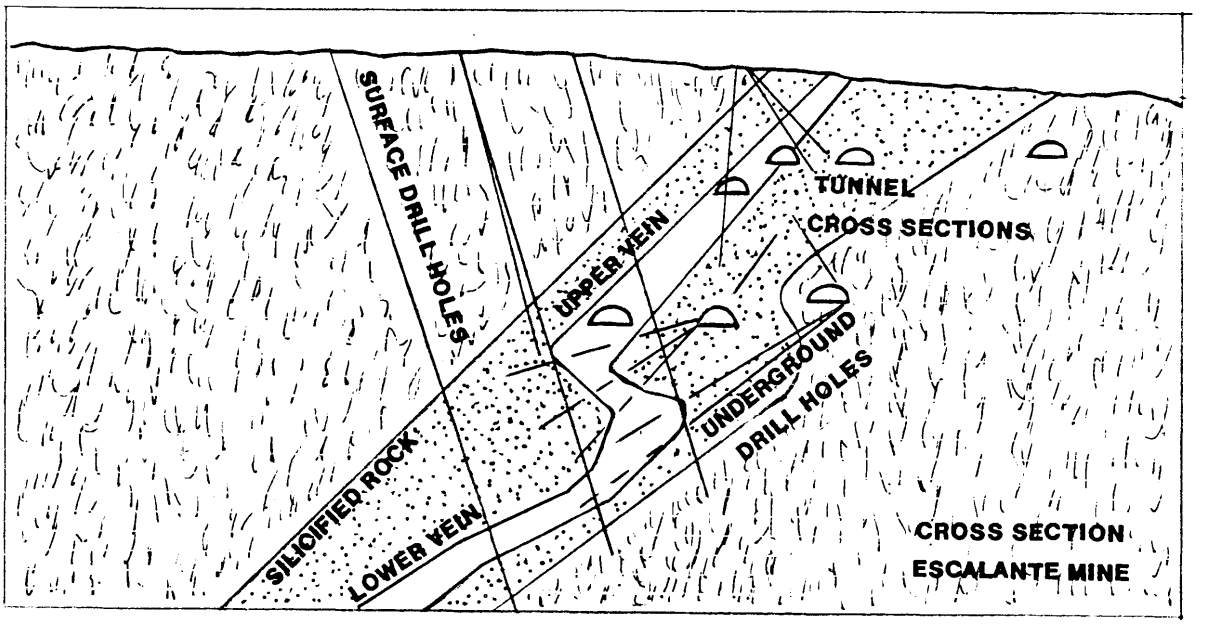

FIGURE 7-8. - Cross section of the ore body.

The vein strikes N25E and dips 70 to 75 degrees west. Northwest tending fracture zones intersect the vein in two or more areas. The ore reserve portion of the vein averages 20 ft in thickness.

Entry into the ore body is via an adit. Decline haulage drifts are developed in the country rock adjacent to the ore body. Entries are developed into drill sublevel and

undercut areas. A modified vertical crater retreat (VCR) mining method developed in Canada is used to recover the ore from the vein. A side view of the VCR drill sub-level is illustrated in figure 7-9.

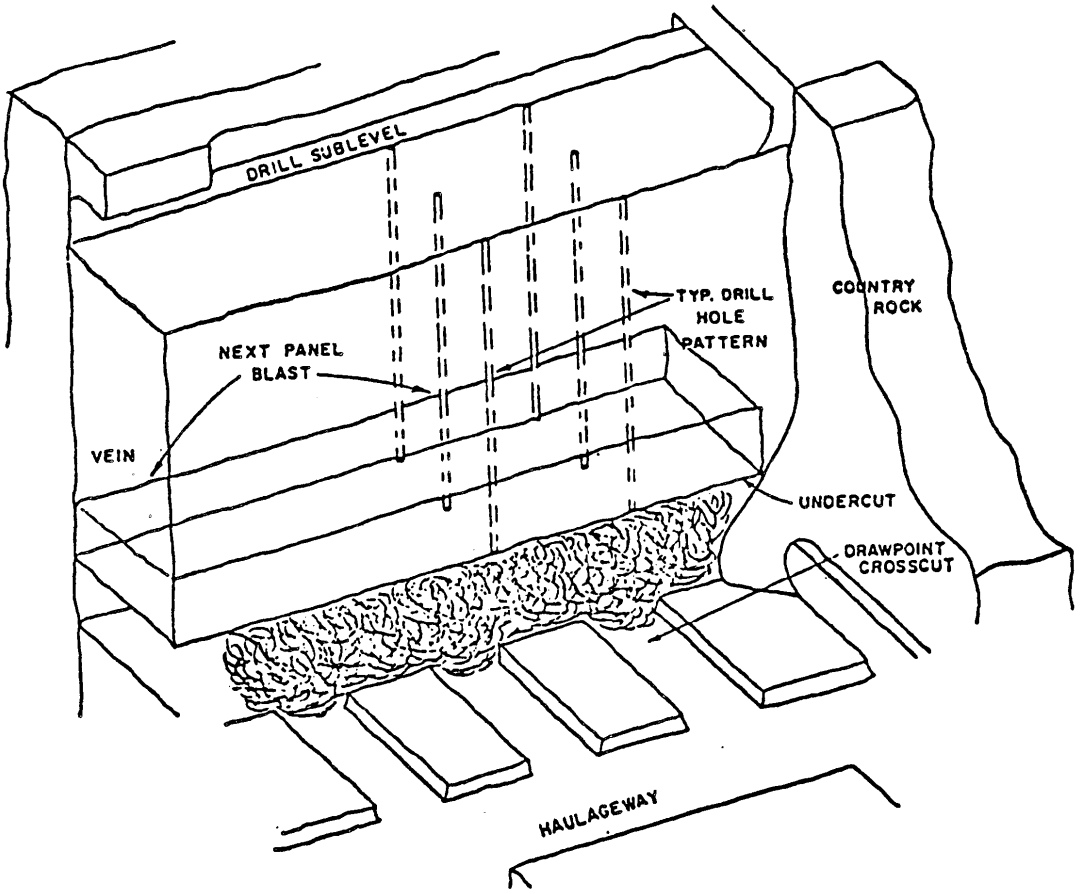

FIGURE 7-9. - Side view of the vertical crater retreat mining method.

From the upper drill sublevel down-hole drilling develops a drill hole pattern that intersects the ore body and the lower undercut muck draw point. Explosive charges are placed in the drill holes above the undercut levels. Deto-

nation of the charges rubblizes the ore body directly above the draw point. Repetition of blasting creates a vertical retreat sequence for the recovery of ore in the vein. After each detonation, muck is drawn from the draw point with an articulated load-haul-dump (LHD) diesel vehicle. The vehicles load the LHD transport muck up the decline to the surface mill. Four diesel powered haulage vehicles are self dispatched in the mine. Up decline vehicles have the right-of-way to the surface dump area. Round trip time on each vehicle is approximately 21 minutes. The shift muck rate is approximately 500 tons per haulage vehicle.

Escalante's Initial Communication System

The Escalante communications system consists of a pager telephone system. A two wire pager line connects the shop to the the 5091 drill sublevel. A block light signalling system is used in the haulage decline to control diesel traffic. The signalling system has traffic lights installed at strategic locations along the decline. Vehicle operators pull a switch rope to change the block traffic light.

Communication Needs

Radio communications were needed between the superintendent, foremen, and haulage vehicle drivers. Radio coverage in the decline, drill sublevels, and the undercut areas of

the mine were also needed so teamwork could be improved. Communication links to vehicles would improve haulage efficiency because vehicle operators could be more efficient in self dispatching trucks to "full" undercut areas.

Installation of the MF Radio System

A base station was installed at the adit. An RF line coupler was clamped around the single pair telephone cable. The base station was controlled by a remote control console (RCC) in the superintendent's office. The office was approximately 700 ft from the base station. A buried cable was extended from the pager telephone cable to the dump in order to facilitate communications to haulage vehicles in the dump area. Vehicular antennas and transceivers were installed on four haulage trucks. Four vest transceivers were given to the shift foremen.

For test purposes a second RF line coupler was installed on the telephone cable at the base station location. The coupler was connected to a field strength meter so that both carrier signal and noise levels could be accurately measured in the mine.

The telephone cable only extended to the 5091 drill sublevel (location shown on Figure 7-10). Beyond that location, high pressure air pipe and AC power cable were the signal distribution conductors in the mine.

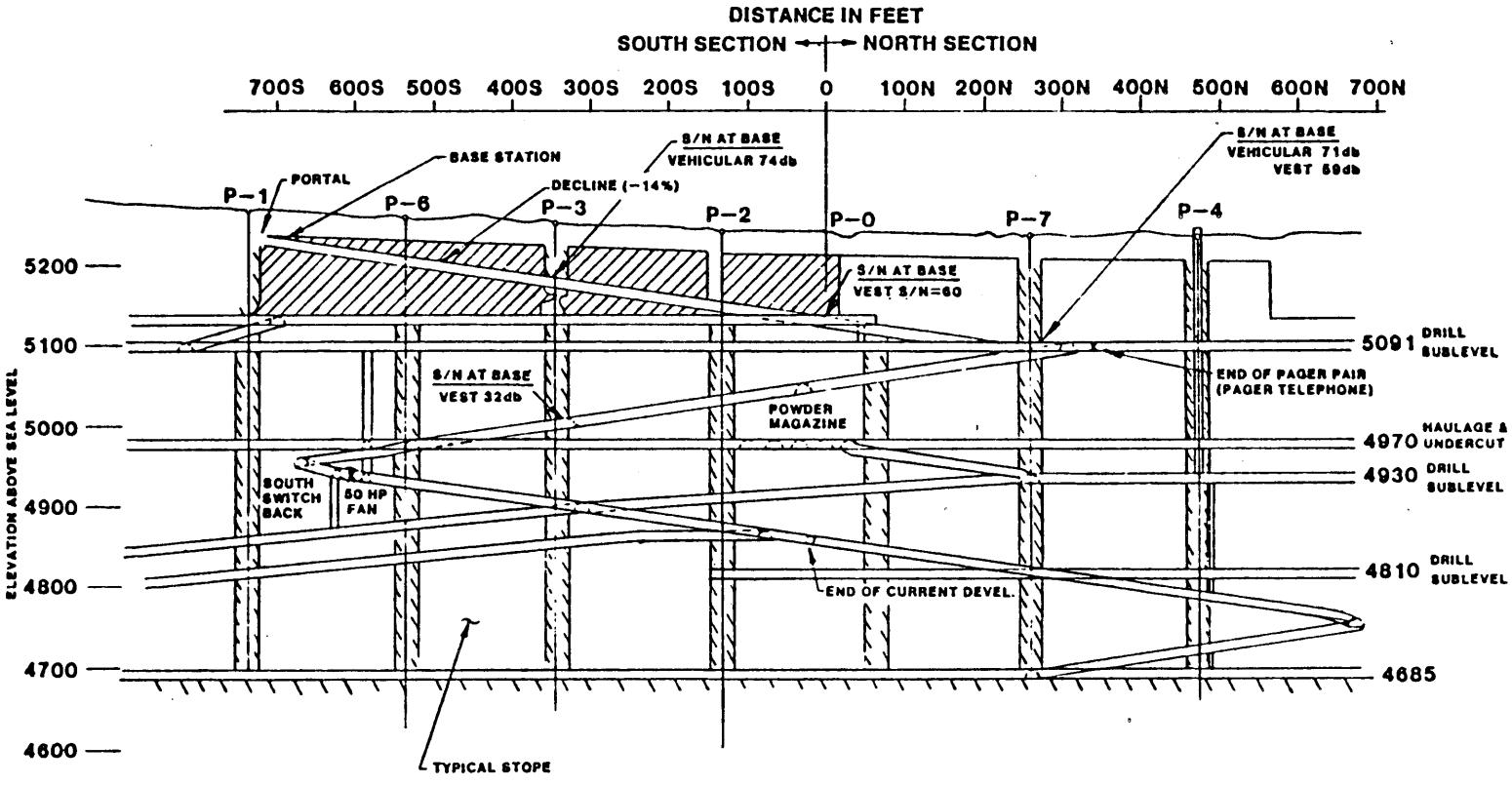

FIGURE 7-10. - Telephone cable in the Redco silver mine haulage drifts.

MF System Tests and Evaluation

The carrier and noise levels were measured in the mine. Analysis of the measurements determined the attenuation rate for tunnel mode signals propagating on the wire plant. The measured level of carrier signal from both vest and haulage vehicles are shown in figure 7-11.

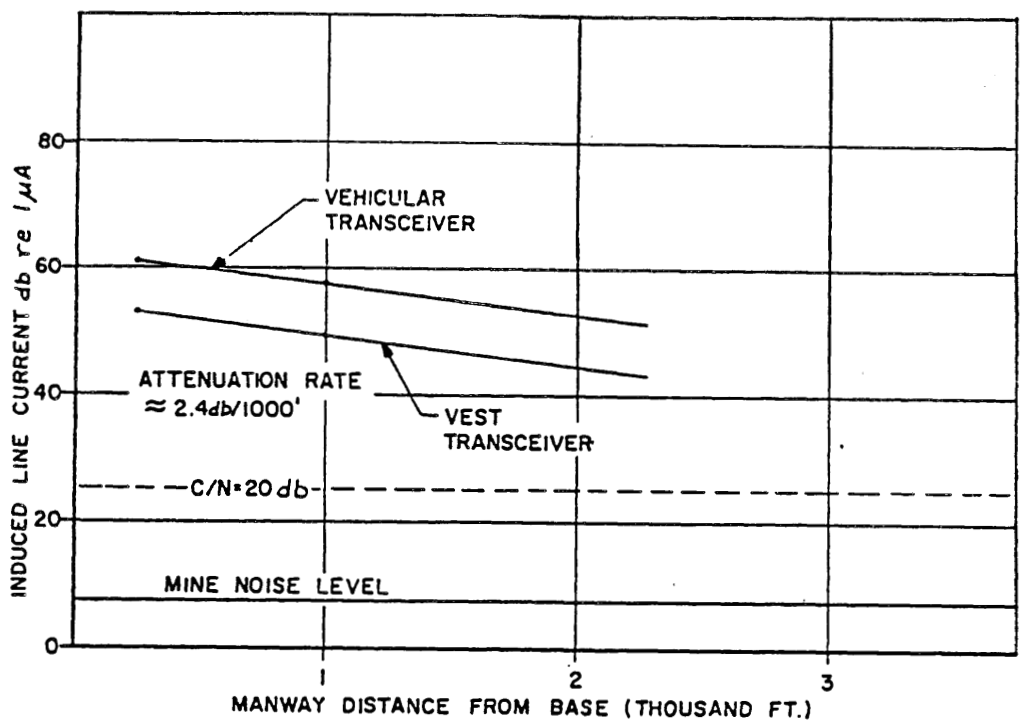

FIGURE 7-11. - Measured level of carrier signal from vest and haulage vehicles.

Analysis of carrier signal levels arriving at the base station from various locations of the test vehicle indicate that the attenuation rate was approximately 2.4 dB/ 1000 ft

along the telephone cable. The carrier to noise ratio of received base station signals exceeded 32 dB for mobile transmissions along the air pipe. Test measurements indicated that signal coupling loss between the air pipe and the telephone cable in the same drift was approximately 30 dB. The minimum separation between the cable and pipe in the decline (outby the 5091 drill sublevel) was approximately 3 ft.

The quality of vehicular voice signals received at the base was excellent. The vest and vehicular talk-back range included the decline outby the 5091 drill sublevel. Further, base station signals could be received everywhere electrical conductors existed in the mine. This included the drill and undercut levels in the vein. Vehicular talk-back range included the entire decline haulageway. Inby the 5091 drill sublevel, the vest talk-back range was restricted to within 3 ft of the air pipe.

The acoustical noise level of the diesel engine exhaust system in the reverberant haulageway drift was high. Communications from moving diesel powered vehicles required the use of circum-aural ear cups and noise cancelling microphones.

Radio Frequency Interference (RFI) generated in the diesel haulage vehicle's electrical system caused the transceiver squelch to break. The break occurred at the threshold setting of the squelch sensitivity adjustment. By setting the squelch control to the tight position, nuisance squelch

breaks were eliminated. The setting reduced the threshold sensitivity of the receiver and hence the operation range of the system. A study of the problem indicated that the source of RFI was the alternator. The RFI was radiated from the vehicle wiring. Filtering at the regulator terminals suppressed the RFI such that receiver sensitivity was only degraded by approximately 6 dB.

The current induced in the blasting cables in the drill sublevel were measured using the test set up shown in figure 7-12.

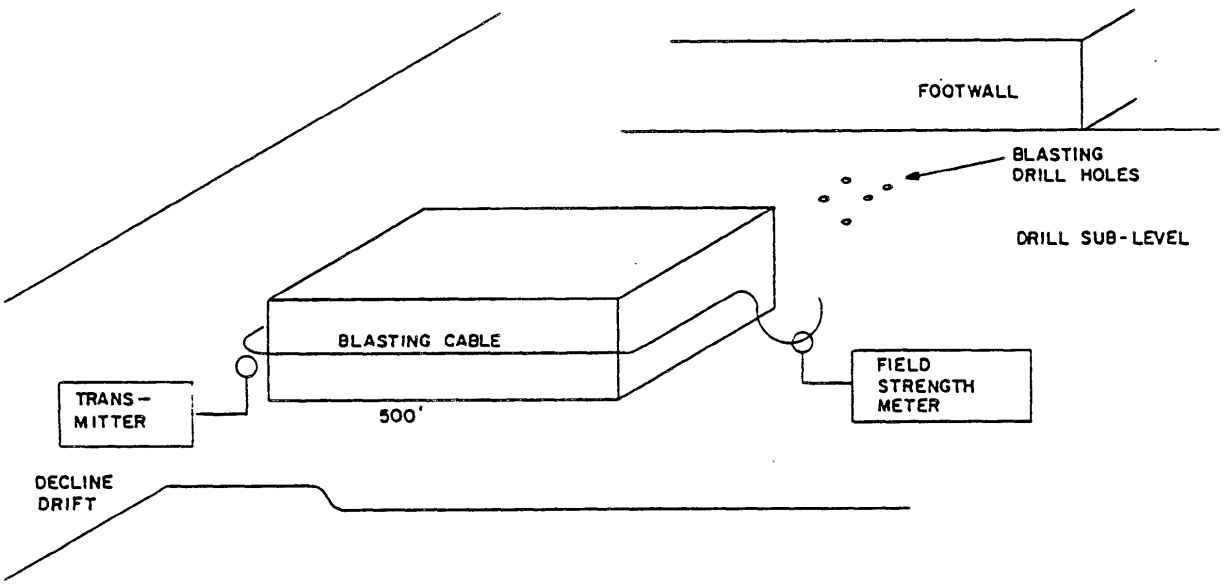

FIGURE 7-12. - Test set up for measuring current induced in blasting cable.

The blasting cable extends from the sublevel drift in the ore body to the decline drift in the country rock, a distance of approximately 500 ft. The current flowing in the blasting cable was measured with a calibrated current probe

(circle symbol) and the field strength meter. When the base station at the adit was transmitting, the maximum current induced in the blasting cable was 0.34 microampere. When a transmitting vehicular antenna was within 1 ft of the blasting cable, less than 1.2 milliamperes of current were induced into the cable. The CFR limit for induced current is 50 milliamperes.

Conclusions

Tests proved that the MF system could be easily and quickly installed in a metal mine. High voice quality signals are received when mobile transceivers are within 7 ft of the electrical conductors in the mine. The talk-back range from the vehicular transceiver to the base was the length of the wire pair cable. The initial length of the cable was approximately 1,000 ft. The cable was later extended to approximately 3,000 ft. Radio coverage includes the entire width (14 ft) of the haulage drift. In drifts with only air pipes, the talk-back distance to the air pipe is limited to only 3 ft. A dedicated wire pair is required to extend the talk-back range to the entire decline.

YORK CANYON COAL MINE

The York Canyon Mine is owned and operated by Kaiser Steel Corporation. It is located in Colfax County near Raton, New Mexico.

The immediate area surrounding the mine is composed of flood plains, valley slopes and broad-ridge crests. Coal is produced from the York Canyon seam in a local zone of the Raton formation. The lenticular seam height ranges from 4 to 12 ft. The formation includes beds of sandstone, siltstone, mudstone, and coal. Annual production exceeds 1 MTPY. The mine uses continuous mining equipment for longwall development.

A simplified sketch of the York Canyon mining complex is shown in figure 7-13.

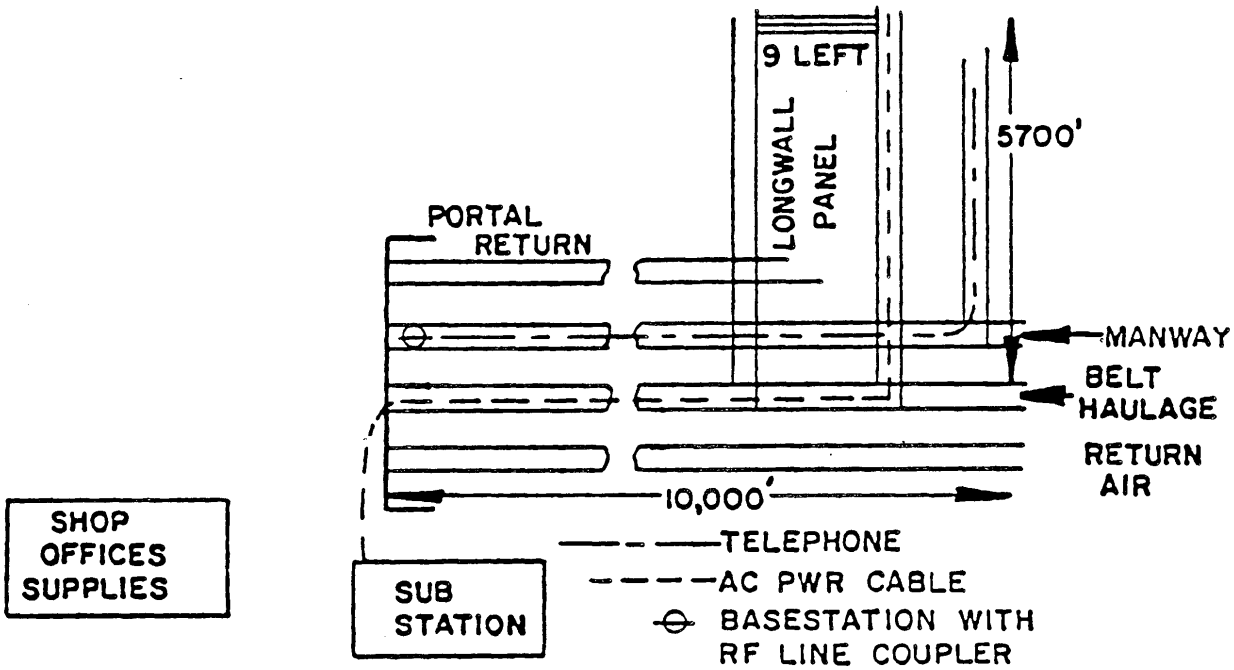

FIGURE 7-13. - York Canyon mine.

The four entry underground mining complex was developed on a south heading for a distance exceeding 10,000 ft. The coal seam height varies along the main entry; however, the average seam height is 7 ft. The entries are separated by 50 ft. The fresh air entry is used for vehicular transportation

in the mine. Battery and diesel powered vehicles transport personnel, supplies and equipment. A cross section of the fresh air entry is shown in figure 7-14.

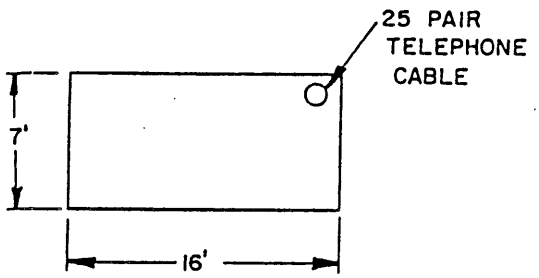

FIGURE 7-14. - Cross section of entry (looking inby).

A shielded 25 pair telephone cable is installed on the upper right hand corner. The belt haulageway is in neutral air and contains a Continental conveyor belt system, AC power cable and a fire detection system. The return air entry was originally used as part of the mine ventilation system. Ventilation shafts are now used to transfer the return air to the surface.

Two entry longwall panels are developed to the left of the main entry. The entry next to the rib is used for the belt haulage system. Like the main haulageway, AC power and fire detection cables are installed in this entry. Telephone cable is installed in the adjacent fresh air entry.

York Canyon Mine's Initial Communications System

The York Canyon Mine uses a private line dial pager telephone system. A 25 pair cable interconnects the underground

phones to a surface PBX. The underground telephone cable enters several junction boxes along the fresh air entry. From these boxes, single pair cable branches out to each pager telephone. At distances of approximately 6,000 ft the cable is terminated in a junction box. A pair continues for an additional 3,000 ft and then enters the 9th left longwall entry.

Communication Needs

The longwall coordinator needs quick communications capability to reach the face boss, beltmen and maintenance men, and supply vehicles. In this mine the centers of activity are the face and the shop area. The longwall coordinator, underground production foreman, and maintenance foreman use battery and diesel vehicles in their work; therefore, vehicular communications are required in the mine. Vest communications are also required since these keypersonnel are often on foot.

Installation of MF Equipment

Vehicular transceivers and antennas were permanently installed on battery powered scooters and diesel powered jeeps. The remote control head (RCH) was mounted near the steering wheel. The antenna was mounted in a vertical plane on the vehicle's right near side. A base station was installed at the portal. The base was remotely control-

led from the shop via a wire pair. The base station impressed MF signals in the 25 pair telephone line via a line coupler at the portal.

Test Results and Evaluations

During the equipment's installation, tests were conducted to determine MF performance in this mine. The carrier and noise levels were measured at the base station location with a second RF line coupler (the first RF line coupler was used to couple signals to the base station) and field strength meter. Subjective audio quality determination was made by listening to the recovered voice signals at the shop and on the vehicles.

Figure 7-15 shows the measured line current as a function of vehicular distance from the base station. The measurements were made at a frequency of 350 kHz. The measured mine noise was found to be approximately 8 dB above one microampere (8 dB re 1uA). At the end of the 25 pair telephone cable, the signal level was 52 dB above the noise. The figure illustrates the carrier level required for a 20 dB C/N ratio. The slope of the measured carrier level line indicates that the average attenuation rate is approximately 1 dB/1000. Measurements were also made at 520 kHz (see figure 5-8). Where the attenuation rate is approximately 2.4 dB/1000 ft.

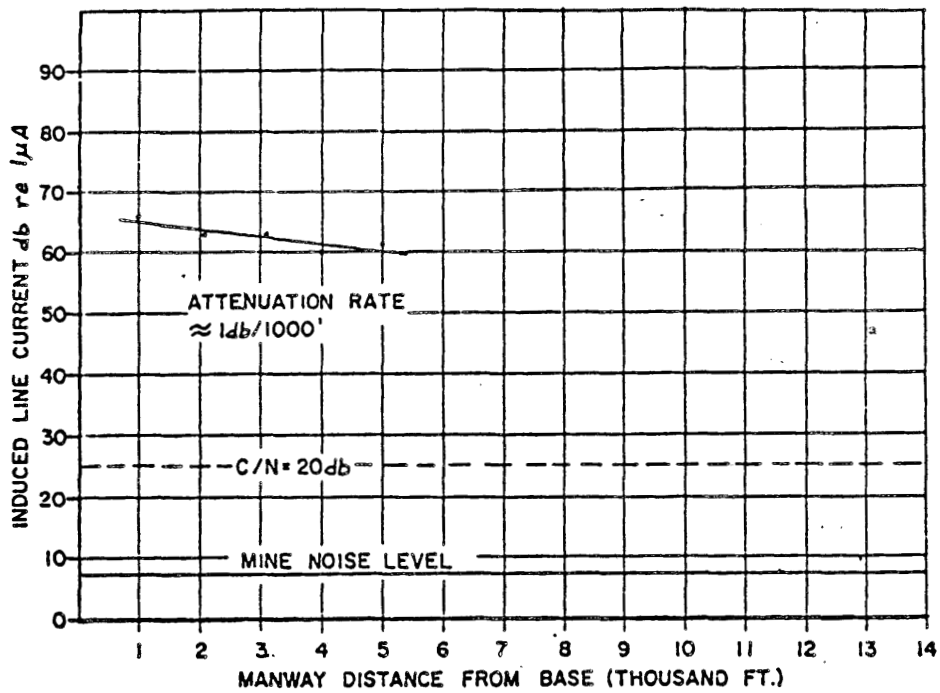

FIGURE 7-15. - Measured line current as a function of the vehicular distance from the base station.

During the tests, the vehicle was in the center of the entry and the vehicular antenna was approximately 7 ft from the telephone cable. This distance changed along the entry because of the seam height and the sag in the messenger cable between anchor points. The antenna was in a vertical plane (horizontal magnetic dipole). When the antenna is in a horizontal plane (vertical magnetic dipole), the induced current was reduced by 2 dB. The antenna was at least 6 inches from any metal surface during this test.

Interesting coupling effects were noted when the antenna was receiving a signal in an adjacent conductorless drift. The maximum received signal occurs when the plane of the antenna is directed toward the telephone cable in the fresh

air entry. It is minimum, when the antenna is parallel to the cable. By way of contrast, the opposite results are obtained when the antenna is in near proximity to the cable.

Tests were also made with the vest transceiver. As in the case of the vehicular equipment tests, the induced line current arriving at the base station was measured with the RF line coupler and field strength meter. The vest signal was approximately 8 dB less then the vehicular signals. This corresponds closely with differences in the vehicular and vest antenna magnetic moment, 2.0 and 5.2 ATM^2, respectively.

The radio coverage area included the fresh air entries. MF signals can be received in entries with electrical conductors. The talk-back range to the base depends upon two factors, the range of the mobile transceiver from the base station and the distance of the mobile antenna from the cable. The talk-back range and distance are always less than the receiving range. At a range of 1,000 ft the talk-back distance was approximately 80 ft. It decreased to 40 ft at a range of 6,000 ft.

Within 4 ft of the cable, the vest to vest communication range exceeds 20,000 ft. It is possible for the vest to receive base station signals all along the longwall face. The distance of the face from the base station exceeded 15,000 ft.

When a cellular repeater transceiver was temporarily installed outby a continuous mining section, the communica-

tion range from the repeater to a vest transceiver exceeded 500 ft.

Conclusions

The objectives were met in the mine testing. Whenever the longwall coordinator was in a vehicle in a fresh air entry (within 7 ft from the cable), he could communicate with the foreman. The maintenance supervisor could communicate with crew members while riding on vehicular equipment and could communicate along the entire haulageway when using vests. The talk-back range from the vehicular transceiver to a base station was at least 15,000 ft. (the range testing limit of this mine).

The test demonstrated that the keyperson reach time was reduced from an average of 35 minutes (with the existing mine telephone system) to less than a second.

The system was easily installed. The base station was installed and coupled to the existing mine wiring in less than 15 minutes and all vehicular equipment was installed in approximately three hours. Repeaters were not used in this mine because of the excellent test results.

A number of equipment design problems were noted. One problem was related to the use of a floating ground battery supply in the vehicular equipment. In the initial installation the power source for the equipment was the vehicular battery. The vehicular transceiver ground was connected to

the frame ground. The vehicular DC motor failed such that a positive ground of the battery supply was connected to the vehicular frame ground. This caused the transceiver wire harness to carry a short circuit current resulting in failure on the transceiver. To solve this problem a floating ground was designed for the radio transceiver. On one occassion a short to ground developed in the control head. Eventually the vehicular DC motor shorted with the positive supply to ground. This caused damage to the radio wiring harness. Because of these instances, an isolated type of DC to DC converter must be used on every vehicular installation. This would enable a vehicle with a short-to-ground failure to proceed to the repair area and still allow the transceiver to remain in operation.

To solve the short-to-ground problems, alternatives such as a fuse are not satisfactory since its failure would disable the radio under the vehicular short circuit situation. An isolated ground system in the radio is not satisfactory since it is possible for circuit to frame grounds to exist in the radio itself. It is recommended that a ground fault detector be included on every floating type of vehicular power system.

STAR POINT COAL MINE

The Star Point Coal Mine is owned and operated by Getty Oil Company. The mine is located in Carbon County near

Price, Utah. The coal sequences are in the Lower Black Hawk formation. Mining takes place in the Wattis upper and middle seam. The seams are bounded above by siltstone, mudstone and sandstone. Annual production exceeds 1 MTPY. Mining is advancing in the south area (Wattis Seam) while in retreat in the mudwater (middle seam). Room and pillar mining techniques are used in the mudwater area and continuous miners are used to develop ahead for a longwall in the south area. A conveyor belt haulage system is used and rubber tired diesel tractors, mancarriers and pickups (ISUZU) are used to transport men and supplies in the mine.

Star Point's Initial Communications System

The mine uses a dial-pager system. Pager telephones are located at key points in the surface office, warehouse and shop. Underground phones are located in the belt haulage entry in other locations along the fresh air entry and in the face.

Communication Needs

Mining operations are conducted in two widely separated areas of the mine. Keypersonnel are frequently in route between the portal and the production areas. Mobile radio was needed to improve coordination between supervisors and crewmen and to reduce haulage downtime. Section foremen wanted radio coverage that extended from the pager telephone

system to the operating face and a mobile telephone that interfaced with the mine's pager telephone system.

Installation of MF Equipment

The entries to the working areas are illustrated in figure 7-16.

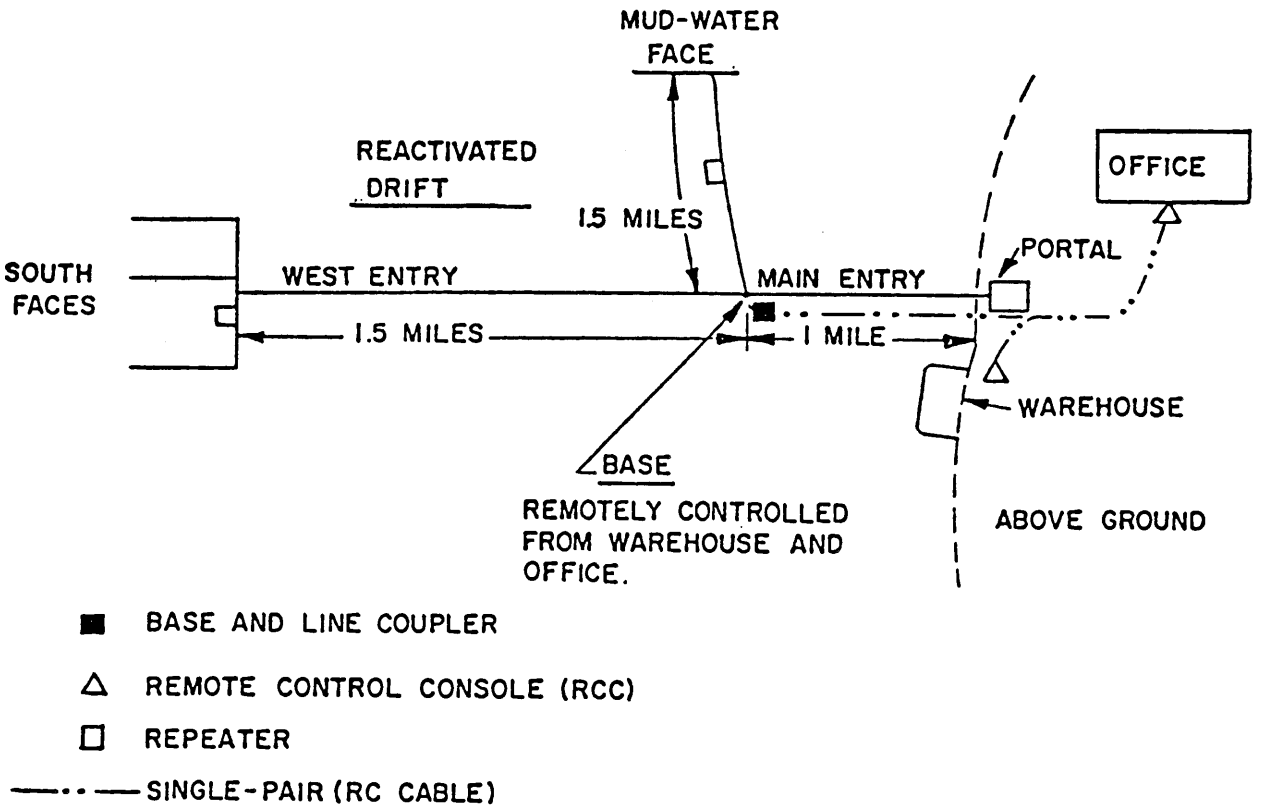

FIGURE 7-16. - Simplified drawing of mains in the Star Point mine.

Mains are developed with four and five entries. The conveyor belt haulage system transports coal from the mudwater and south areas to the portal of the mine. At a distance of approximately 1 mile from the portal, the mudwater conveyor

belt intersects the west main belt. A single pair telephone cable is installed in the conveyor belt entry. The fresh air entries provide a roadway for vehicular traffic. Separate 7100 and 13,200 volt three phase AC power cable supply power to the mudwater and all south areas, respectively. The AC power cables are installed in and out of the roadway entry. Transformers along the AC power cable provide power to the conveyor belt drives in the belt entry and in the power cable. MF equipment was installed to provide radio coverage along the roadway. A base station was installed at the intersection of the west and mudwater mains. Coupling to the AC power and telephone cables was made via RF line couplers which were clamped around the mudwater 7100 volt and the 13,200 volt cable. The telephone cable was installed with high voltage insulation tubing and was also placed in the coupler. The couplers were connected to the base station via a trifilar wound matching transformer. The transformer was made by winding 17 turns of #20 magnet wire on a type A ferrite material core with a 1 inch outside diameter. The insertion loss of the transformer was 0.2 dB. The base station operated on a frequency of 400 kHz and was remotely controlled from the warehouse and office.

Four vehicular transceivers were installed on diesel powered tractors. Figure 7-15 shows that in the mine two dual frequency F1/F2 global repeater systems were used. Frequency (F1) was 400 kHz and frequency (F2) was 520 kHz. The use of two frequencies allows access to global repeaters when

transmitting on frequency (F2). The global repeater receives signals at F2 and retransmits it F1. The first F1/F2 repeater was installed in the Mudwater entry approximately 3,600 ft from the base station and 5,000 ft from the face. The second repeater was installed near the south area entrance, approximately 7,000 ft from the base station and 6,500 ft to the furthest South face.

Test Results and Evaluation

The system's performance was evaluated by measuring carrier and noise levels of MF signals arriving from the mobile equipment in the roadway entries. The induced line current measurements were made by use of a third RF line coupler and a field strength meter. The noise level was approximately 8 dB re at 1 v in the mine (about the same level as in the York Canyon mine). Range testing indicated that each AC power transformer produced from 8 to 12 dB of insertion loss. The talk-back range was dependent upon the number of AC power transformers between the vehicular transceiver and the base station.

A vehicular transceiver could reliably receive base station signals within 7 ft of the AC power cable within a range of approximately 7,000 ft from the base. Beyond 7,000 ft of a base station, F2 transmission enables vehicular reception via repeater action. Radio coverage was not provided in roadway entries without AC power cable. The maximum reliable talk-back range was approximately 5,000 ft

from the base station or a repeater. The south area roadway entry was conductorless. A dedicated single pair telephone cable was installed in the entry. It threaded the RF line couplers at the repeater and was directly connected to the pager telephone cable at that location.

The vest receiving range includes all belt entries within 5,000 ft of the base station or main south repeater. The vest antenna distance from any conductor in the belt haulage system was often as great as 40 ft. At a range of 10,000 ft from the base station, the vest antenna distance was restricted to approximately 7 ft. The vest talk-back range to the base station along the telephone cable was more than 10,000 ft (at a distance of 7 ft from the cable).

The vest talk-back range along AC power cables was considerably less. It was approximately 3,000 ft when the antenna was approximately 7 ft from the cable.

Conclusion

The AC power cable provides good radio coverage in the mine; but because of AC line switches and transformers, signal distribution is often limited. To provide good continuity of signals throughout the mine, twin-lead cable instead of AC power cables should be installed in manways for MF signal distribution. The twin-lead cable is advantageous because it provides radio coverage all along the manways.

The value of the MF system was demonstrated when a continuous mining machine was buried by a rockfall at the Mudwater face. The system was used to instantly alert the underground superintendent of the problem, saving valuable time in the recovery effort.

Additional value of the system was demonstrated along the conveyor belt line. In this case, the beltmen report that use of the vest saves them valuable time because they are always in contact with the base station and do not need to go to telephones to communicate.

The face boss believed that the use of the cellular repeater and vest in an operating mine setting would be an important application of the system. Since an intrinsically safe vest was not available during the evaluation period, its effect on mine productivity could not be determined.

VIII. RECOMMENDATIONS

Because MF communication systems are expected to emerge as principal communications systems in mining, a need exists to improve and enhance the systems by the adoption of several basic additions. These include:

A. REDUCE LOSS ACROSS AC POWER TRANSFORMERS AND SWITCHES

MF signal propagation on mine AC power grids can be improved by developing efficient couplers for use around high loss transformers and switches.

B. RFI SUPPRESSION

RFI suppression filtering techniques must be developed for use on various types of alternators encountered on underground mine vehicles. These filters should have the capability to suppress noise generated by contactor arcs on trolley powered equipment.

C. FACE RADIO COVERAGE AREA

The long term benefits of providing vest radio coverage inby an operating section must be evaluated in further field testing. Although the vest design is intrinsically safe and can operate inby, the cellular repeater must be operated outby. Its connection to the pager telephone system must be through an approved barrier so it won't affect the intrinsically safe approval of the telephone system. In the

event of a mine ventilation failure, an MSHA approved procedure must be developed to turn off the repeater.

D. VEHICULAR DC-DC CONVERTER ISOLATION

Vehicular transceivers which derive their power from floating ground electrical power sources must use an isolated DC to DC converter. Further, it is recommended that a ground fault detector device be included on floating-ground electrical power systems.

E. RF LINE TO LINE COUPLERS

RF line to line coupling techniques should be developed in order to simplify the installation of single pair cable in conductorless entries. A bidirectional amplifier should be developed for this purpose along with passive techniques.

F. HOIST SYSTEM COMMUNICATIONS

Hoist radio communications can be dramatically improved with the use of MF antennas and couplers developed in this work. The RF line couplers mechanical design and the transceiver enclosure must be sealed. The transceiver enclosure should be filled with dry nitrogen to prevent build-up of water. The transceiver design should include a tone signalling module to enable miners to reliably signal the hoistman. Further , the signalling should include an emergency stop as well as the status of the slack rope detector.

G. PAGER FUNCTIONS

The extensive receive coverage area demonstrated in mine testing shows that a pager receiver would operate extremely well in an underground mine. A small pager transceiver should be developed for the system.

H. IDENTIFICATION OF RADIO COVERAGE AREAS

Areas of radio coverage must be marked by a visable sign so a communicator knows from where he can reach the base station.

Unlike surface radio coverage, underground coverage exhibits many fringe areas of radio reception. In the fringe areas receive messages are often noisy and unintelligable so miners must be instructed to step nearer an electrical conductor to communicate.

I. TRAINING

Training materials must be developed to enable mine maintenance personnel to service radio equipment to the board level.

LIST OF REFERENCES

1. Pugh, D.S. Organization Theory. Penguin Modern Management Reading, 1971.

2. Mayo, E. Hawthorne and the Western Electric Company-the Social Problems of Industrial Civilization. Routhledge, 1949, 60-76 pp.

3. Bavelas, A. A Mathematical Model for Group Structure. Applied Anthropology, v. 7, 1948, pp 16-30.

4. Leavit, H.J. Some Effects of Certain Communication Patterns on Group Performance. Journal of Abnormal and Social Psychology, No. 48, 1951, pp 38-50.

5. Lohman, G.M. A Closed Network Queue Model of Underground Coal Mining, Production, Failure, and Repair. Jet Propulsion Laboratory, California Institute of Technology, Pasadena, CA, Pub. 78-72, Aug. 1978.

6. Marrus, L.D., etal. Logistic Performance of Continuous Miners. (contract S0144057). BuMines No. 4185, Jan. 1976.

7. Dr. John Smoker. Medical Officer for Kaiser Steel York Canyon Mine, Raton, New Mexico.

8. Sacks, H.K. and Chufo, R.L. Medium Frequency Propagation in Coal Mines. Paper in Preprints of Papers Presented at the 4th West Virginia University Conference on Coal Mines Electrotechnology, Aug. 1978.

9. Emslie, A.G. and Lagace, R.L. Medium Frequency Radio Propagation and Coupling in Coal Mines. BuMines H0155008. Proceedings, Electromagnetic Guided Waves in Mine Environments Workshop, Boulder, CO, March 1978.

10. Lagace, R.L. Task Leader, Transmit Antennas for Portable VLF to MF Wireless Mine Communications. Arthur D. Little, Cambridge, Mass. BuMines H0346045, Task C. Task order 1, May 1977.

11. Hill, D.A. and Wait, J.R. Excitation of Monofilar and bifilar Modes on a Transmission Line in a Circular Tunnel. Journal of Applied Physics, v. 45, No. 8, Aug. 1974.

12. Scott, et al. Electromagnetic Noise in McElroy Mine. Institute for Basic Standards, Electromagnetic Division, NBS, Boulder, CO. 74-389.

13. Kanda, M., et al, Electromagnetic Noise in McElroy Mine. Electromagnetics Division, Institute for Basic Standards, NBS, Boulder, CO, June 1974.

14. Lagace, R.L. Emsile, A.G. and Grossman, M.A. Modelling and Data Analysis of 50 to 5,000 kHz Radio Wave Propagation in Coal Minea. (contract H0346045) BuMines OFR 83-80 1980, 109 pp. Arthur D. Little, Inc. PB 80-209455.

15. Cory, T.S. Propagation of EM Signal in Underground Mines. (contract H0366028, Collins Radio Group). BuMines OFR 136078, 1977, 158 pp. PB289757/AS.

16. Wait, J.R. Electomagnetic Waves in Stratifield Media Pergamon, 1970.

17. Emsile, A.G. and Lagace, R.L. Propagation of Low and Medium Frequency Radio Waves in a Coal Seam. Radio Science, v. 11, No. 4, 253-261 pp, April 1976.

18. Cory, T.S. Summary Data Report No 2 - Mine Wireless Propagation Test Program - Ireland Mine Test Data at Medium Frequency. Spectra Associates, Inc., Cedar Rapids, Iowa.

19. Moser, J.R. and Spencer, R.F. Predicting the Magnetic Fields from a Twisted-Pair Cable. IEEE Trans. Eng., EMC-10, 324-239 pp, 1968.

20. Private communications with Dr. Julius Hupert.

21. Andvt Microphone and Audio System Study. BuMines N00039-77-C-0365. Naval Electronic System Command, Washington, DC, Aug. 1978.