CABLELESS ELECTRONIC SURVEYING SYSTEMS FOR HORIZONTAL HOLES

prepared for

UNITED STATES DEPARTMENT OF THE INTERIOR
BUREAU OF MINES

by
ENSCO, INC.
EARTH SCIENCES and SYSTEMS DIVISION
5400 PORT ROYAL ROAD
SPRINGFIELD, VA 22151

ENSCO, INC.

Final Report

on Contract H0177069
CABLELESS ELECTRONIC SURVEYING SYSTEM
FOR HORIZONTAL HOLES

March, 1981

CABLELESS ELECTRONIC SURVEYING SYSTEM FOR HORIZONTAL HOLES

FINAL REPORT

Prepared for:

UNITED STATES DEPARTMENT OF INTERIOR
BUREAU OF MINES

Pittsburgh Mining and Safety Research Center
4800 Forbes Avenue
Pittsburgh, PA 15213

Prepared by:

ENSCO, INC.

Earth Sciences and Systems Division
5408A Port Royal Road
Springfield, VA 22151

Contract No. USBM H0177069

March 1981

50777-101

REPORT DOCUMENTATION PAGE	1. REPORT NO.	2.	3. Recipient's Accession No.

4. Title and Subtitle
CABLELESS ELECTRONIC SURVEYING SYSTEM FOR HORIZONTAL HOLES

5. Report Date
March 1981

6.

7. Author(s)
Dennis McLaughlin John Millhiser - Margaret Bonarek

8. Performing Organization Rept. No.

9. Performing Organization Name and Address
ENSCO, INC.
Earth Sciences and Systems Division
5408A Port Royal Road
Springfield, VA 22151

10. Project/Task/Work Unit No.
1202

11. Contract(C) or Grant(G) No.
(C) H0177069
(G)

12. Sponsoring Organization Name and Address
U.S. Bureau of Mines - Pittsburgh Mining and Safety Research Center
4800 Forbes Avenue
Pittsburgh, PA 15213

13. Type of Report & Period Covered
Final

14.

15. Supplementary Notes

16. Abstract (Limit: 200 words)

This report contains a description of the contract activities performed by ENSCO, Inc. under contract No. H0178069. The purpose of this project was to enhance the Bureau of Mine's Cableless Electronic Survey System use to aid in the drilling of long (approx. 2000 feet) boreholes in coal. This drilling is performed as part of the methane drainage program. The system that was ultimately developed was field tested and demonstrated in actual in-mine drilling activities. The significance of this system as compared to previous drill survey systems is the fact that it surveys without having to be inserted and removed for each survey point. It is so designed that it can withstand the shock and vibration experience by the drill string during drilling. This means an increased productivity is now possible in that drill operators can determine drill bit positioning in a near real-time environment.

17. Document Analysis a. Descriptors

Mining; coal; methane drilling; survey

b. Identifiers/Open-Ended Terms

c. COSATI Field/Group

18. Availability Statement	19. Security Class (This Report)	21. No. of Pages
	Unclassified	235
	20. Security Class (This Page)	22. Price
	Unclassified	

(See ANSI-Z39.18) See Instructions on Reverse OPTIONAL FORM 272 (4-77) (Formerly NTIS-35) Department of Commerce

FORWARD

This report was prepared by ENSCO, Inc., Earth Sciences and Systems Division, Springfield, Virginia under USBM Number H0177069. It was administered under the technical direction of the Bureau of Mines with Dr. H. Sacks and Merle Bowser acting as Technical Project Officer. A. G. Young was the contract administrator for the Bureau of Mines. This report is a summary of the work recently completed as part of this contract during the period September 30, 1977 to February 29, 1980.

DISCLAIMER

TABLE OF CONTENTS

LIST OF ILLUSTRATIONS AND FIGURES

LIST OF ILLUSTRATIONS (CONT'D)

1. EXECUTIVE SUMMARY

Throughout the history of coal mining, the dangers associated with elevated levels of methane gas within the mine environment has posed serious hazards. It has been directly responsible for the distruction of many mines as well as the death of many miners. In response to this, the United States government through the Bureau of Mines has undertaken many research projects whose purpose have been and are to develop methods by which the measurement of the level of this deadly mine hazard as well as the control of the level can be accomplished.

One of the control techniques which has been developed is the use of long horizontal boreholes being placed along a coal seam. Coal which is beneath the earth's surface tends to contain gas, much as a sponge will hold water. Research as well as industry practice shows that by the drilling of the boreholes in the coal seam permit the coal to release large amounts of the gas through the hole where it can be safely vented out of the mine. This technique is particularly beneficial because methane drainage can be done well ahead of the actual mining of the coal seam. Since modern mining methods and equipment expose virgin coal at such a rapid rate, the prerelease of entrapped gas almost becomes a requirement to keep methane levels below the danger point.

The drilling of these long (approx. 2000 feet) boreholes, however, is not without problems. Specifically, maintaining the drill within the coal seam during drilling coupled with the desire to know where the drill is located geographically are problems faced by the drill operator. Until recently, the most widely used technique for surveying during the drilling operation was the use of the Sperry Sun Multi-Shot tool. This tool is used by pumping it down the center of the drill string until it gets to the drill bit. Then a photo

of the internal compass and pendulum position is taken and the tool retrieved. After development of the photo, it is read and the drill operator is given the heading (bearing) and inclination of the drill position. The process is repeated at increments, such as when additional lengths of pipe are added, thereby providing a history and current location of the drill string. Each shot takes approximately 30 minutes to complete from the time the drill stops until drilling resumes.

In the early 70's the Bureau of Mines developed a system that would give the driller information within minutes. If featured radio communication between the drill and the driller, and the use of a computer on the surface to analyze the data and inform the driller of the results. This system provides information in less time than the earlier techniques. However, it did have operational disadvantages, as the computer operators on the surface had to phone the results to the driller in the mine.

With the development of microprocessors in the mid-70's, it became possible to develop a computer small enough to go into the mine, and designed for the driller to operate it. The Bureau of Mines then awarded a contract to ENSCO, Inc. to develop that computer and to enhance the downhole unit that transmits information. This report contains the results of this research project along with conclusions and recommendations for the continued operation and enhancement of the Cableless Survey System (CSS).

The resulting CSS tells the driller where his drill is very quickly following the stopping of the drill. Figure 1 shows the operational setup of the CSS. Time is saved over

previous survey techniques in that CSS remains "downhole" in the horizontal borehole during drilling operations. It is rugged enough to withstand the shock and vibration resulting from the drilling operation.

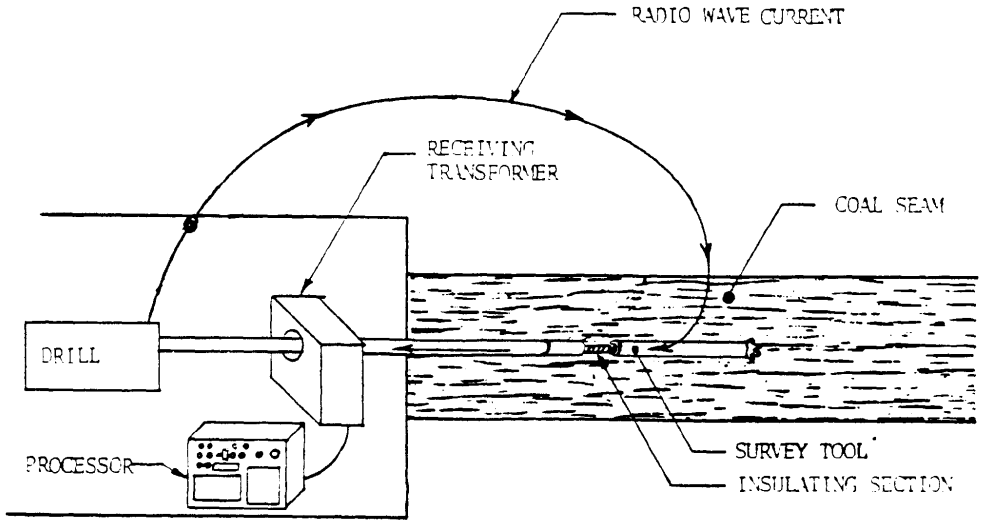

Figure 1. Cableless Survey System

The CSS works by measuring with its on-board sensors the position of the earths magnetic and gravitational vectors. It then relays that data by induction of an electric current through the drill and the surrounding coal material to the "uphole" receiver/processor. The processor then computes the current position of the tool with respect to the vectors mentioned above and displays the results to the driller. In addition, the processor then adds the new data point to the survey as drill rods are added, thus giving survey information such as vertical and horizontal deviations from a straight line based on initial headings and inclinations at the beginning of the borehole.

Figure 2 is a photograph of the front panel drillers display of the CSS Processor. The keyboards are used to key in initial conditions as well as control the survey operations. Under a hinged panel on the right hand side is located a thermal printer where survey results are printed for reference and records the entire survey. As designed, the entire receiver, processor, display and printer are intrinsically safe. This now permits the driller to have all aspects of the survey system located at the drill site.

This research project which started in October of 1977, was conducted in three phases. A detailed description of the work accomplished in each phase is contained in this report. The three phases are as follows:

Phase I: Repair and Evaluation of Existing System
Phase II: Design and Fabrication of a Portable Display and Processing Unit
Phase III: Field Test and Upgraded System

During Phase I the initial downhole tool and receiver was repaired and field tested in the Mariana Mines to determine its capability. Results of this testing was the decision to upgrade and enhance the downhole tool to make it more reliable and operationally efficient. Additionally, sensors were added to improve system measurement capability.

Activities under Phase II were the design and fabrication of a portable, intrinsically safe receiver processor. Hardware was designed, developed and tested. Initial field calibration tests were conducted which indicated that the system worked within expected limits. Bearing and inclination errors were within the ±0.5° and ±0.01° respectively.

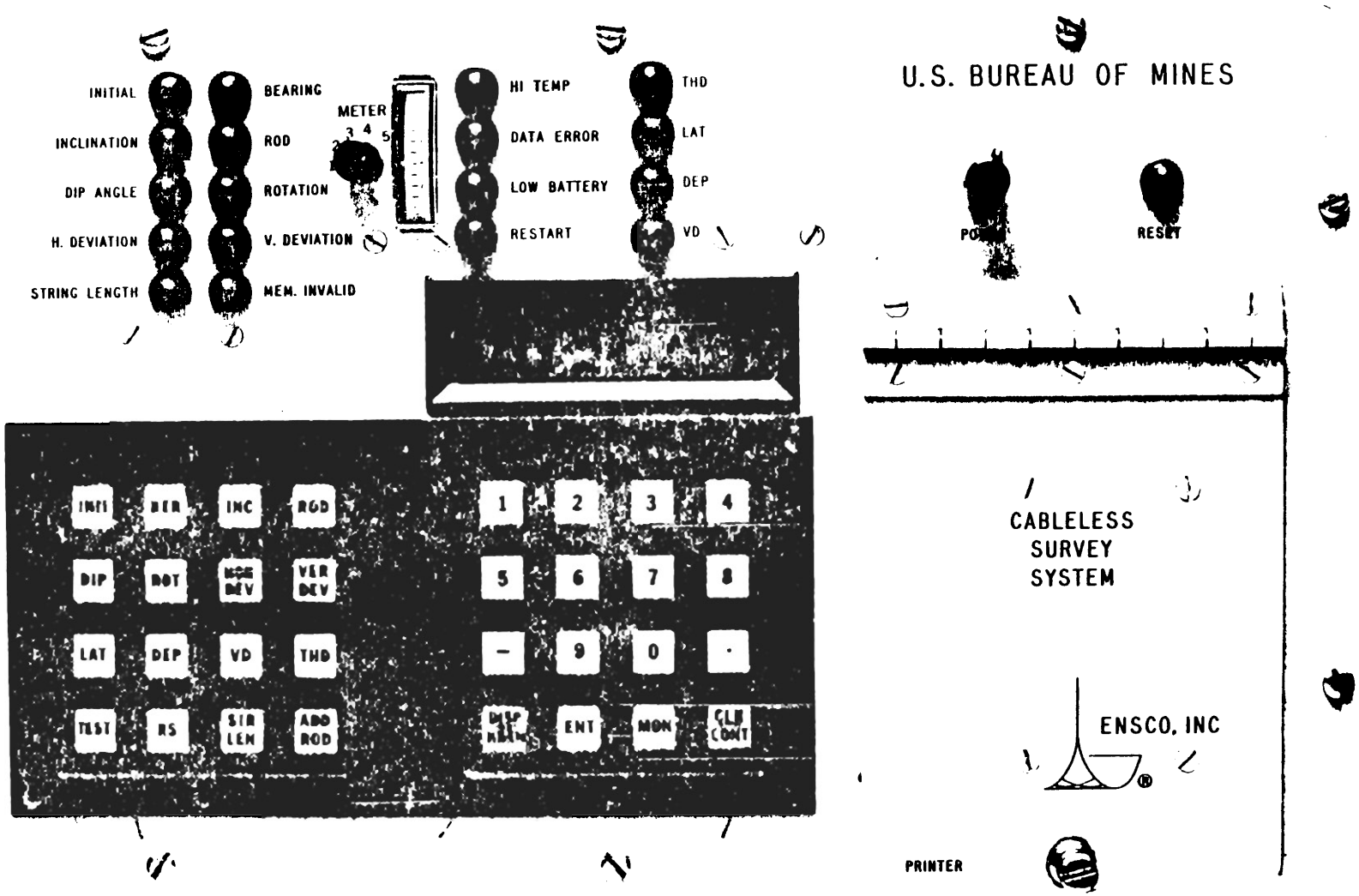

Figure 2. Front Panel of the Cableless Survey System Processor

Phase III work covered the in mine drilling tests and demonstrations. During this phase, the CSS was used during actual drilling operation in two different coal mines. Although, holes that were surveyed totaled slightly over 800 feet, the tool was in place for many redrilling and reaming operations which subjected it to a significant number of drilling hours. Operational problems were encountered during drilling. Most of the problems were associated with battery packs and connections. All were repaired but system availability was hampered by these problems. Other operational problems were in the area of the size and weight of the tool and its effects on drill guidance.

In conclusion, the newly enhanced and upgraded CSS provides critical survey information in a timely and efficient manner to the drill operator. The development of the permissible microprocessor subsystem has provided a system that can be tailored for future expansion of the CSS as well as other research applications requiring data acquisition and processing on site in the hazardous mine environment. The operational problems discovered during actual field use should be further examined and incorporated in future design. The research project has provided the industry with the capability of increased productivity in degassing operations.

2. PROGRAM ACTIVITIES

The objective of this program was to recondition the United States Bureau of Mines (USBM) cableless surveying system (CSS) and imporve its operational capability. The program was divided into three separate phases. They are as follows:

- Phase I: Repair and Evaluate Existing System
- Phase II: Design and Fabricate a Portable Display and Processing Unit
- Phase III: Field Test of Upgraded System

Phase I

Phase I of the program started in October 1977 and culminated in May of 1978 with the submission of the Phase I report. During this phase, work consisted of the repair of the downhole unit to make it operational, field testing and an evaluation of its capability.

The repair of the downhole unit involved both mechanical and electrical aspects of the device. Some of the repair work actually involved minor modifications to improve previous known difficulties. The centralizers which support the inner canister in the outer driller collar as originally designed failed during previous testing. In addition, these centralizers did not properly support the inner unit which permitted it to flex and disturb proper sensor alignment. New centralizers were designed and fabricated by molding urethane to form a collar with spacers which fit around the inner canister. This later proved to be very successful. The new pieces slipped on and off with no direct attachment and could be easily replaced and spaced along the entire length of the canister.

Another activity that went beyond what would normally be considered as repair was a modification that permitted the batteries to be recharged without disassembly of the downhole unit as previously required. Circuitry was added to the power control circuit boards which permitted a modified audio power oscillator to be connected to the downhole transducer in a fresh air environment. This technique fully recharges the batteries in about sixteen hours and eliminates the requirement for disassembly of the tool.

Once the downhole unit was considered operational, it was subjected to pressure tests to ensure that the integrety of the explosion proof canister still met permissability requirements. The inner canister was subjected to a minimum pressure of 1500 psi over a 10 hour period. During the test a peak pressure of 1700 psi was experienced. After testing the unit was operated and then disassembled to determine if any leakage had occurred. The unit operated satisfactorly and no leaks had occurred.

Following the above repair and rehabilitation the CSS was taken to the mine for field testing and data acquisition. The mine chosen for the field testing was Marianna #58 in Pennsylvania. During the field tests the downhole unit operated satisfactorily when exposed to more than 25 hours of drilling operations including several hours of hole reaming activities. Only minor problems were encountered during this testing. They involved thermally induced drift of the system receiver, operational difficulties associated with mounting the up-hole toroid and excessive water pressure required to trigger the downhole unit. All of these problems were expected prior to testing and steps were already planned for Phase II that would correct them.

The data from the field test was tabulated and returned to ENSCO, Inc. for detailed analysis. In addition, survey data from the Sperry-Sun survey tool used to survey the same hole was gathered for comparison. Results of the comparison indicated that the CSS closely matched the survey results obtained with the Sperry Sun. For example, in a survey of a 830 foot hole, the two survey tools differed by approximately 2.3 feet in vertical deviation and less than 1 foot in lateral deviation. Further lab testing indicated that certain instrument biases associated with sensor mechanical alignment and electrical offsets did exist in the CSS. Also, an error analysis was done by feeding simulated data into a computer which indicated significant errors could exist with the CSS when it is directed along a northerly or southerly heading. It was determined that by adding two additional sensors to the downhole unit, there errors would be greatly reduced.

A report for Phase I which gives the details of all Phase I activities was prepared and submitted to the USBM. Results of the computer analysis are contained in Appendix A of this report.

Phase II

Program activities that were accomplished during Phase II of the contract were the modification and upgrade of the downhole tool, and the design and development of a new portable uphole receiver-processor.

As a result of Phase I activities, as well as previous drilling experience, a number of deficiencies with the downhole survey tool were outlined. They were as follows:

- Water pressure required for triggering downhole tool too high,
- Excessive errors caused by sensor ambiguities when operated along a northerly or southerly heading,

- Electronic components included originally which were no longer available,
- Transmit clock instability which prohibited receive tracking on a reliable basis.

The downhole tool was designed to send a transmission sequence when the water pressure in the drill collar is raised to a level greater than 100 psi. In actual field test operation this pressure was difficult to obtain. A number of factors were responsible such as too small or defective pump, lack of enough water volume, debris clogging the water way, etc. Since the pressure problem was still evident in Phase I of this program, it was decided to install a lower pressure trigger switch. An identical switch with a lower range which now activates the downhole tool with approximately 70 psi water pressure was installed.

In order to correct the anomallies associated with the north-south problem, it was decided to add two additional sensors. These sensors consisted of biaxial accelerometers oriented to detect the gravatational vector along the planes from side to side and top to bottom of the sensor canister. A single package was procurred that contained both accelerometers mechanically aligned 90° apart from each other.

The addition of the new sensors required that the sensor canister be made longer. In order to make room for this extension while maintaining the original overall package length forced the repackaging of the electronics to provide the additional space. The requirement for repackaging also provided the opportunity to improve several other known deficiencies.

In the original design, the survey tool clock was controlled by resistor-capacitor timing. This proved to be unstable in the drilling environment and therefore required wide bandwidths in the receiver tracking circuits. The increased bandwidth also increases the suseptability to noise problems. Therefore, a crystal controlled clock was installed in the survey tool. This will permit narrow bandwidths to be used in the telemetry receiver.

During the rehabilitation of the downhole package done in Phase I the A/D converter was found to be inoperative. Attempts to replace the unit led to the discovery that the particular part was no longer manufactured. Fortunately, one was found and installed for testing, but no spare units for future repair would be available.

In light of all of the above it was decided that the downhole survey tool electronics would be upgraded throughout with commercially available components. Further, the existing explosion proof canister would be retained unaltered so as to retain permissibility.

Appendix B gives the resulting mechanical layout of the upgraded tool along with its output specifications and sensors specifications.

The second aspect of the Phase II activity was the design and development of a permissible portable uphole receiver and processor. A system design was submitted that called for the use of low power CMOS circuitry. It was felt that the use of this low power integrated circuit technology would simplify the permissibility process because power requirements would fall within the intrinsically safe levels. Figure 2 shows the front panel of the resulting receiver/processor.

A detailed description of the system design is included in Section 3 of this report.

The final activity of Phase II was the testing and alignment of the system. Since this device uses the earth's magnetic field as its input and this field is disturbed in the proximity of magnetic materials, i.e., buildings, cars, pipes, etc., the system was taken to an open land area. The field tests consisted of rotating the package around each axis and plotting the output from each sensor to determine exact scale factor and offset. After exact scale factor and offsets for each sensor channel were determined new alogirthm coefficients were calculated and incorporated in the processor programmable memory. The rotational tests were then repeated for verification.

It should be noted that vertical rotation of the package was not accomplished. This was due to the fact that the package was very long and heavy and would require a complicated and costly fixture to support the unit while providing precise alignment.

Following the alignment tests, the system was subjected to a simulated trajectory test. This was done by placing a pattern of nine holes in a board in the following arrangement.

•2	•3	•4
•9	•1	•5
•8	•7	•6

The coordinate distance between each hole was such that movement between any two adjacent holes vertically or horizontally repositioned the tool by 1° in bearing for horizontal and 1° in inclinations vertically. The simulated survey was performed

by entering the initial conditions for hole #1 at an initial string length of 20 feet. Then a survey of the first hole position was done and an assumed 10 foot drill rod added. The tool was then positioned sequentially in each hole and a survey done adding 10 foot rod sections for each hole until hole #1 was repeated. This resulted in a total simulated survey of 120 feet of string length. Figure 3A shows a comparison of calculated bearings versus tool measurements. Figure 3B gives the same comparison for inclination. Figure 3C compares the theoretical survey path to the computer results provided by the cableless survey system. As seen in Figures 3A and 3B the bearing and inclination readout fall very close to the expected accuracies for the tranducers, i.e., ±0.5° for the magnetometer and ±0.1° for the accelerometers. Some of the inclination errors are slightly outside of the expected variance. This has been attributed to two factors. First, a buildup of tolerance and secondly a slight play in the interface of the holes in the target and the positioning pin. In addition, errors in the absolute position of the hole were not corrected or compensated.

The errors associated with sensor relative alignments were examined by repeating the simulated trajectory test twice. First, two readings separated by a 180° rotation were average for each hole and then repeated taking four readings separated by 90° rotations for each hole. The results of these tests are:

	2 Readings Per Hole	4 Readings Per Hole
Bearing errors: mean	0.149°	0.145°
Standard Deviation	1.12°	0.078°
Variance	1.20°	0.006°
Inclination errors:		
mean	0.008°	0.006°
Standand Deviation	0.084°	0.07°
Variance	0.007°	0.005°

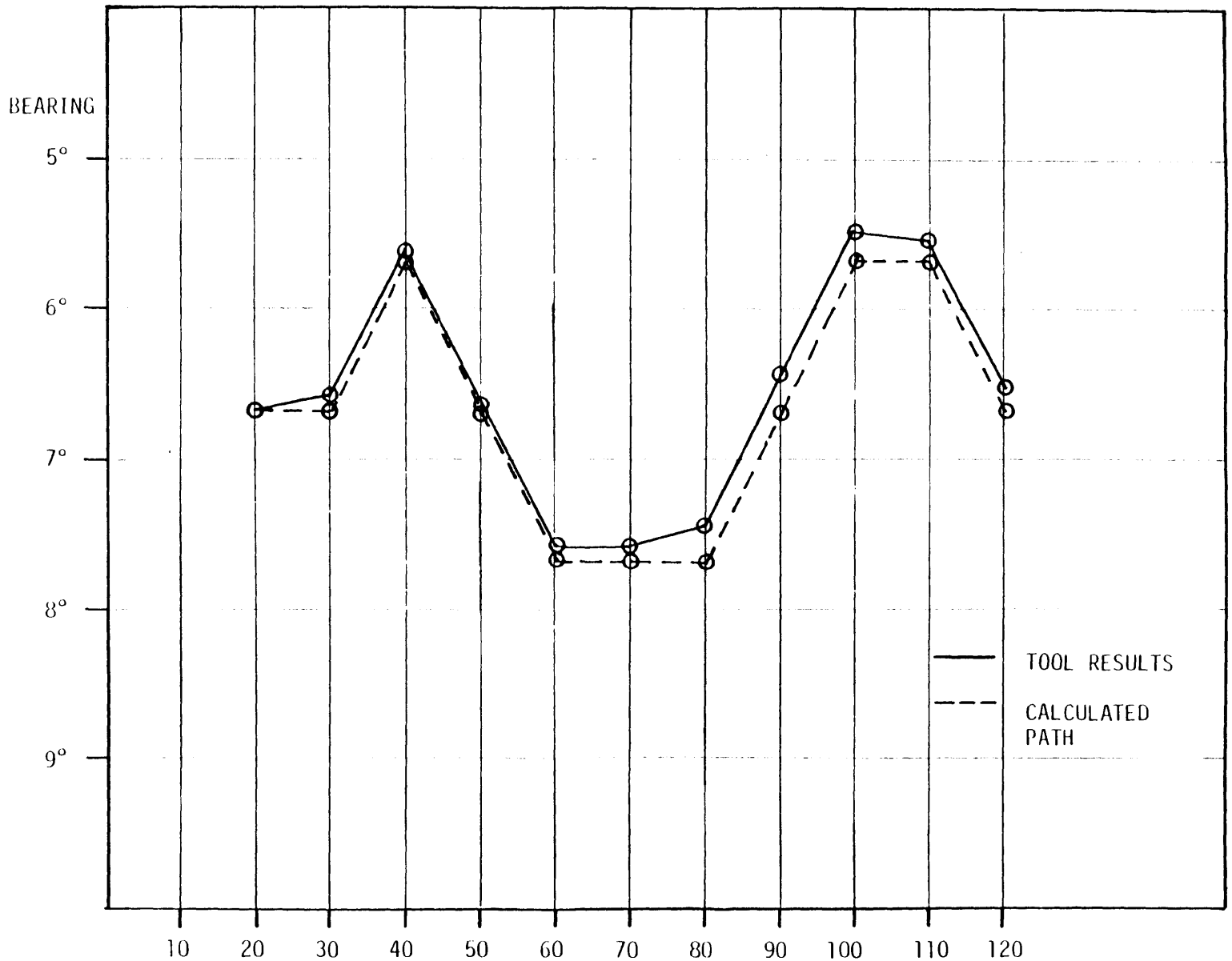

Figure 3A. Comparison of Calculated Survey Path vs. Measured Bearings for Simulated Trajectory Test

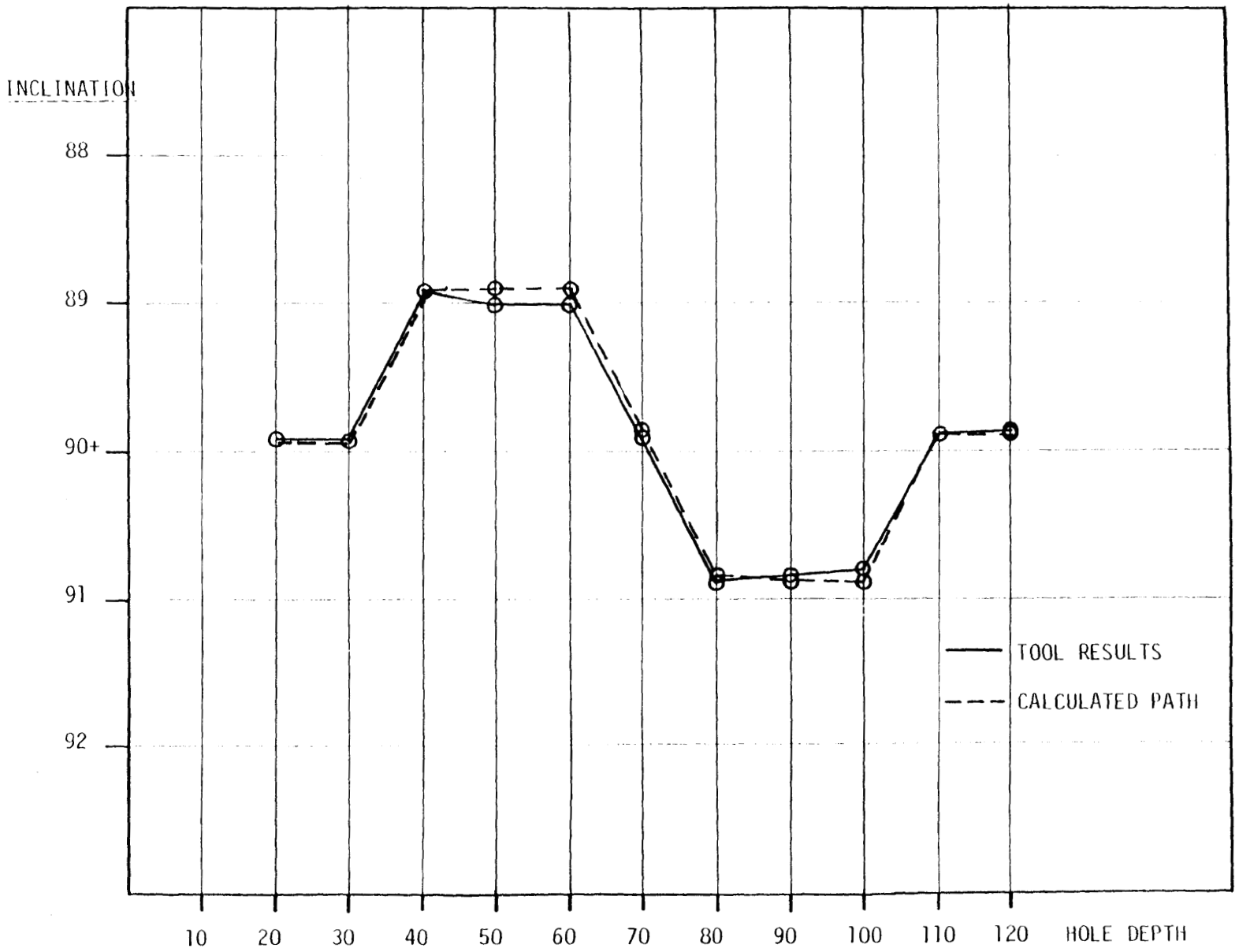

Figure 3B. Comparison of Calculated Survey Path vs. Measured Inclination for Simulated Trajectory Test

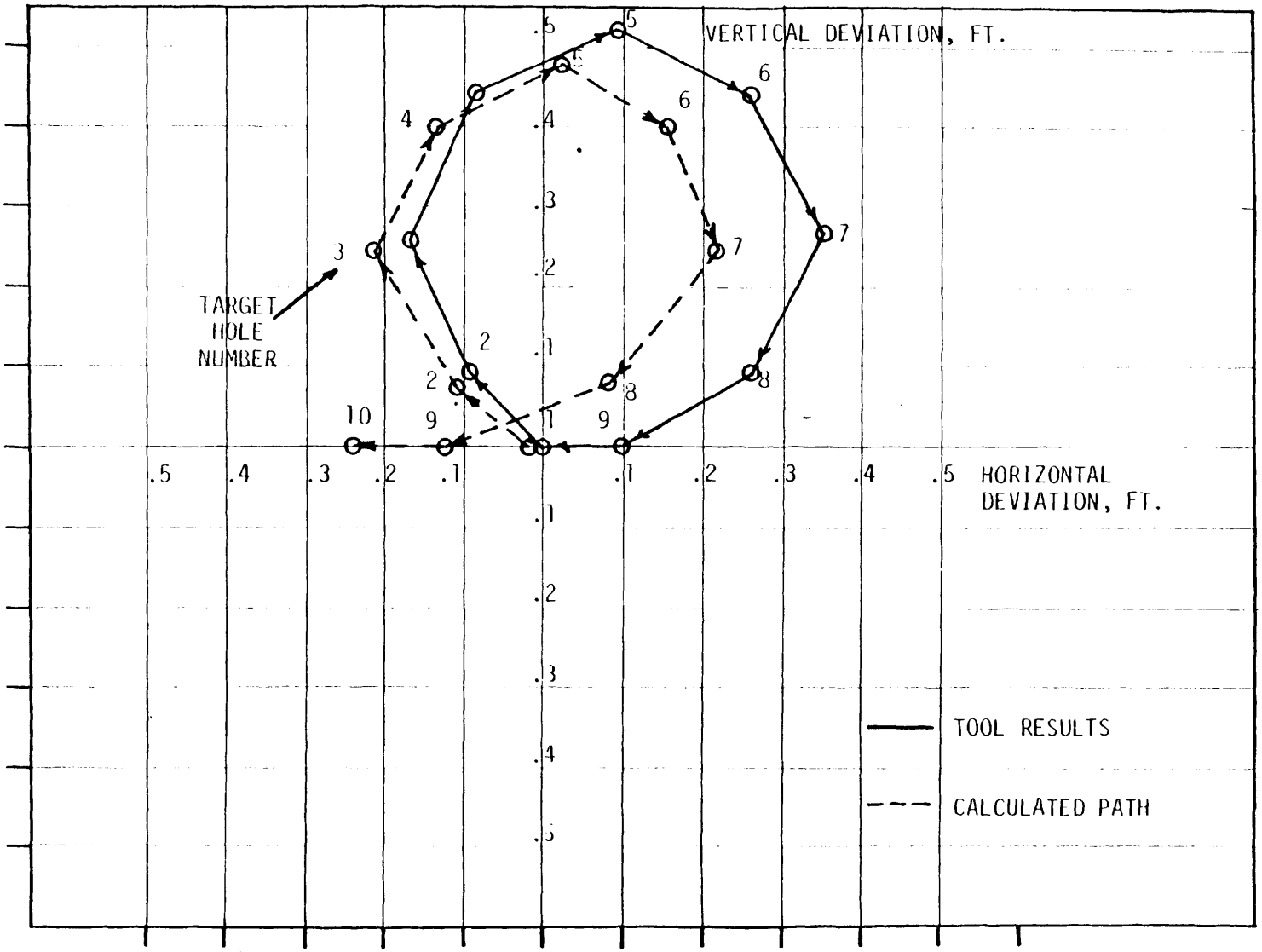

Figure 3C. Comparison of Calculated Survey Path vs. Measured Survey Path for Simulated Trajectory Test

These results are interesting in that the errors associated with the accelerometers are fairly consistent in both cases and are well within the expected ranges. The bearing calculation is the result of combining the outputs of three orthagonally oriented magnetometers. The inclination is the result of a single accelerometer oriented axially within the package. Therefore, the bearing includes the combination of three independent errors whereas the inclination error is the result of a single transducer and thus the larger bearing errors and the statistical improvement with four readings.

Phase III

Phase III began in July of 1979 with the first in-mine drilling test of the upgraded system. Testing began in Eastern Coal Company's Federal #1 mine near Fairmont West Vigrinia. A series of problems with the drilling operation caused a one month delay in the field test activities. The problems were primarily associated with the drill motor itself and the water pump used.

Upon return to Federal #1 in mid August the USBM had installed a new drill motor and water pump system. The CSS was installed and drilling was begun. During the testing phase the only problem encountered with the CSS centered around two areas.

First was the batteries. In both the downhole tool as well as the uphole tool battery life seemed to be much less than the theoretical life should be. Later examination of the batteries revealed failed cells in the positive side of the downhole battery pak and failed cells in the receive side of the uphole processor. Batteries were replaced prior to future drilling operations.

The second problem deals with an intermittent contact on the downhole torid connections. This was fairly a fairly severe problem in that the toriod connection is buried deep within the potted transducer. The connection was reconditioned and future drilling activities were accomplished without problems in this area. Another aspect with this same connector was discovered during this test series was the problem of debris in the water supply lodging against the connector and the result blockage of sufficient water flow and pressure. It was realized that a water supply filter must be used when the CSS is used to restrict particles greater than 1/16 inch from being pumped into the drill string.

Even with the above problems, the CSS was used successfully diring actual drilling operation to survey from 35 feet to 320 feet in the hole. In addition, the Sperry Sun Tool was used to survey the same hole. Figure 4 shows a comparison of the CSS results and the Sperry Sun for vertical depth of the hole. The difference between the two surveys falls primarily in an initial reported offset. Although no specific reason for the difference was determined, the basic output of the two tool results does correlate.

A record of automatic receiver gain settings was kept and is given in Figure 5. As shown as string length increased, received gain also increased. This is especially true out to about 290 feet. Beyond 290 feet receiver gain started to decrease. This was due to an abandoned drill string which was seized in an adjacent hole. In fact the drill bit eventually hit the adjacent drill steel at 329 feet. Note that the readings taken while the two drill strings were in contact were 34dB and 10dB. These very low gain readings were due to the excellent conductivity of the return signal path provided by the seized drill string.

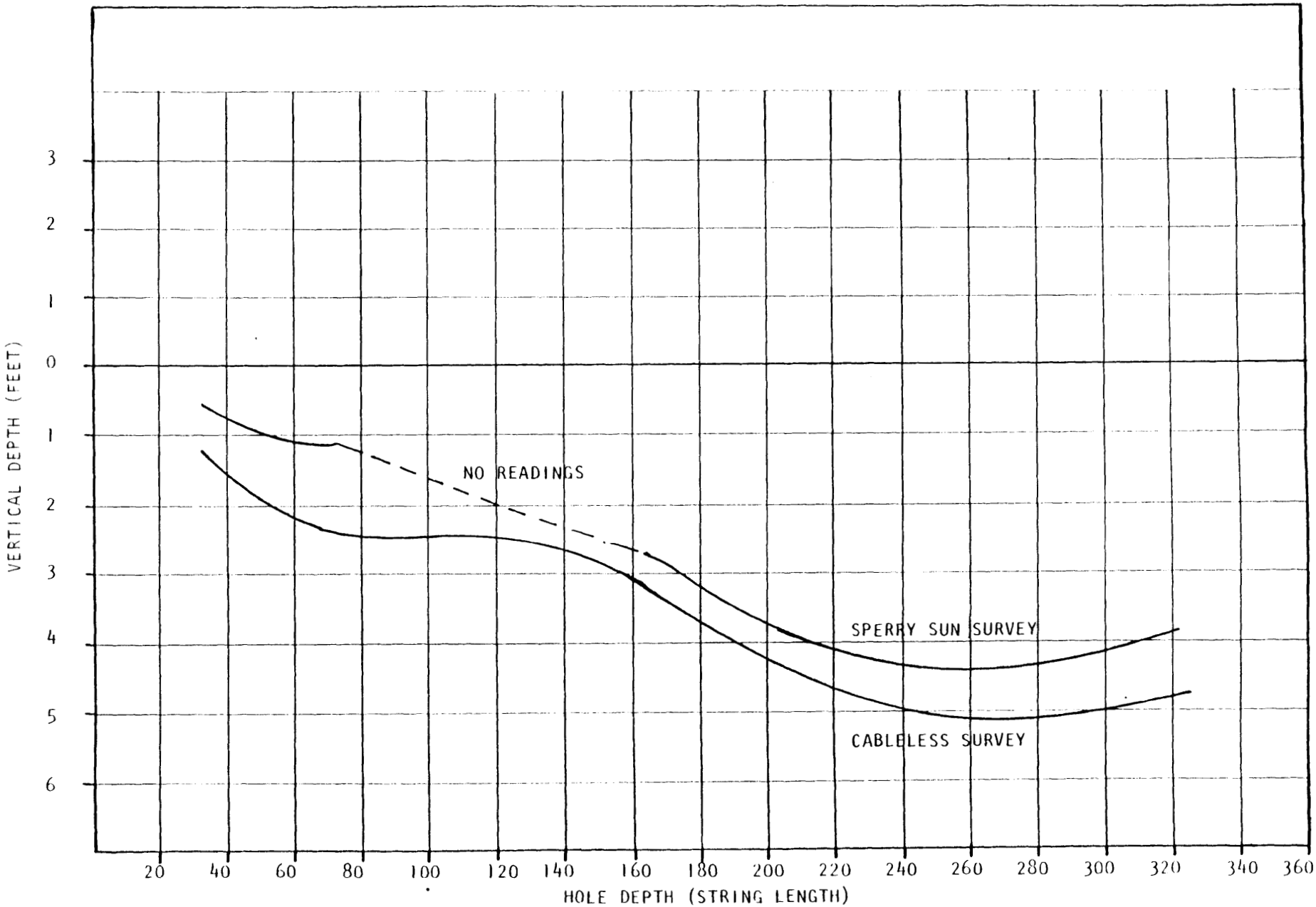

Figure 4. Vertical Survey of Horizontal Drill Hole
Using Sperry Sun Tool and CSS

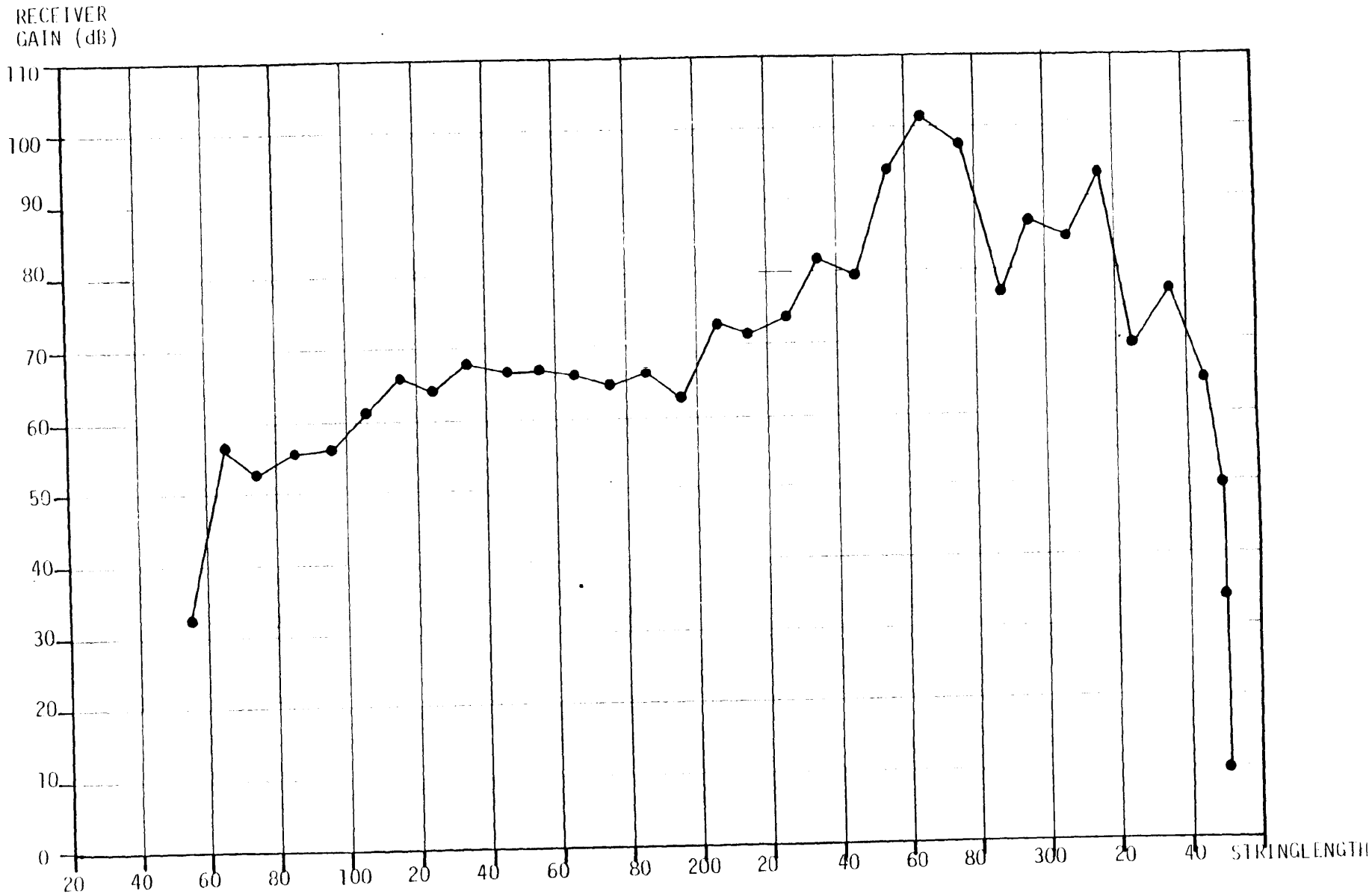

Figure 5 . Receiver Gain vs. String Length

The readings which were taken out at 245 feet and 255 feet were higher than expected and were actually getting close to the limit of the receive capability. Later testing showed that these high readings were the result of the "dirty" hole. For example, in hole depths on the order of 400 to 500 feet receiver gains of 40 to 50dB were common provided the hole had been washed clean of cuttings prior to the transmission.

Hole #2 was abandoned after several attempts to redirect the drill had failed. A third hole was started but had to be abandoned when the drill could not be kept in the hole. Therefore, no other survey tests were conducted at Federal Mine #1.

The tool was returned to ENSCO while the next drilling site was being prepared. While at ENSCO, adjustments were made to improve the operational characteristics of the system. These improvements were based on experience gained during the Federal #1 mine drillings. These changes occurred primarily in the area of monitoring capability and operating signalling via the front panel to indicate what operation the system is performing. These changes were most beneficial in removing the "mystery" of the electronic survey system.

The next drilling activity occurred in December of 1979 at the Mariana #58 Mine in Pennsylvania. During the drilling program the CSS was successfully used to survey the drilling operation to a depth of 490 feet.

While drilling at the Mariana Mine the survey system worked fairly well. On several occasions when the survey indicated that drilling was approaching regions known to contain slate binder layers within the coal seam, cuttings indicated that

the layers were hit within 3 feet along the drill path. This was at a string length of 454 feet. Records of the receiver gains attained in this field trial indicated that with a clean hole, good ground and good bit to coal thrust pressure, numbers on the order of 40 to 60dB of gain were common through this drilling from 55 feet to 490 feet.

As with the previous testing exercise, batteries continued to be less than adequate. The problem was traced to be the interconnections within the battery cansiter and the relays used to activate the system. These items were all repaired and no further debilitating problems occurred. Another less serious problem that occurred throughout the testing was the triggering of the down hole unit. This is done by raising the water pressure to at least 70 psi and then permitting it to fall below 60 psi. The various pumps used and available water supplies were often not capable of not delivering the required levels unless orifices were installed in the bit to restrict flow.

The final aspect of Phase III was the development of an O&M Manual and a classroom training session given at the Bruceton Research Center. Personnel from the Bureau and from the independent drilling contractor were trained in this operation and maintenance of the system.

3. SYSTEM DESCRIPTION

The Cableless Survey System (CSS) is designed to provide near real time data during degasing operations in coal mines. Degasing is performed by drilling long (up to 2000 feet) horizontal boreholes into a virgin coal seam. The survey or downhole tool is attached directly behind the drill bit. This is shown in Figure 6 below.

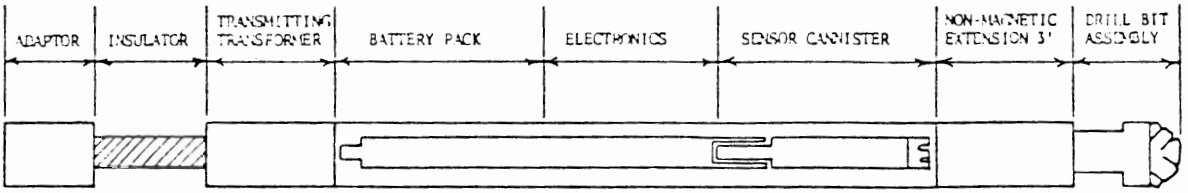

Figure 6. Survey Tool and Drill Bit

In the survey tool, the transmitter and battery are separate assemblies which join together in a pressure-tight tube. The sensors are in a separate pressure-tight tube which joins to the first. This pressure tube assembly is then enclosed in an outer tube with an annular space between them for water passage. The transmitting transformer joins the main package with a water-tight electrical fitting and has a hole through its center for water flow. A short non-magnetic extension of the same size as the outer tube is added at the sensor end of the unit to isolate the effects of magnetism which might exist in the drill bits and subs. The downhole unit mounts close behind the drill bit. Figure 7 is a block diagram of the survey tool electronics.

The sensor outputs are sampled in a time division multiplex technique in which each sample is converted from analog to digital form and used to modulate the phase shift transmitter.

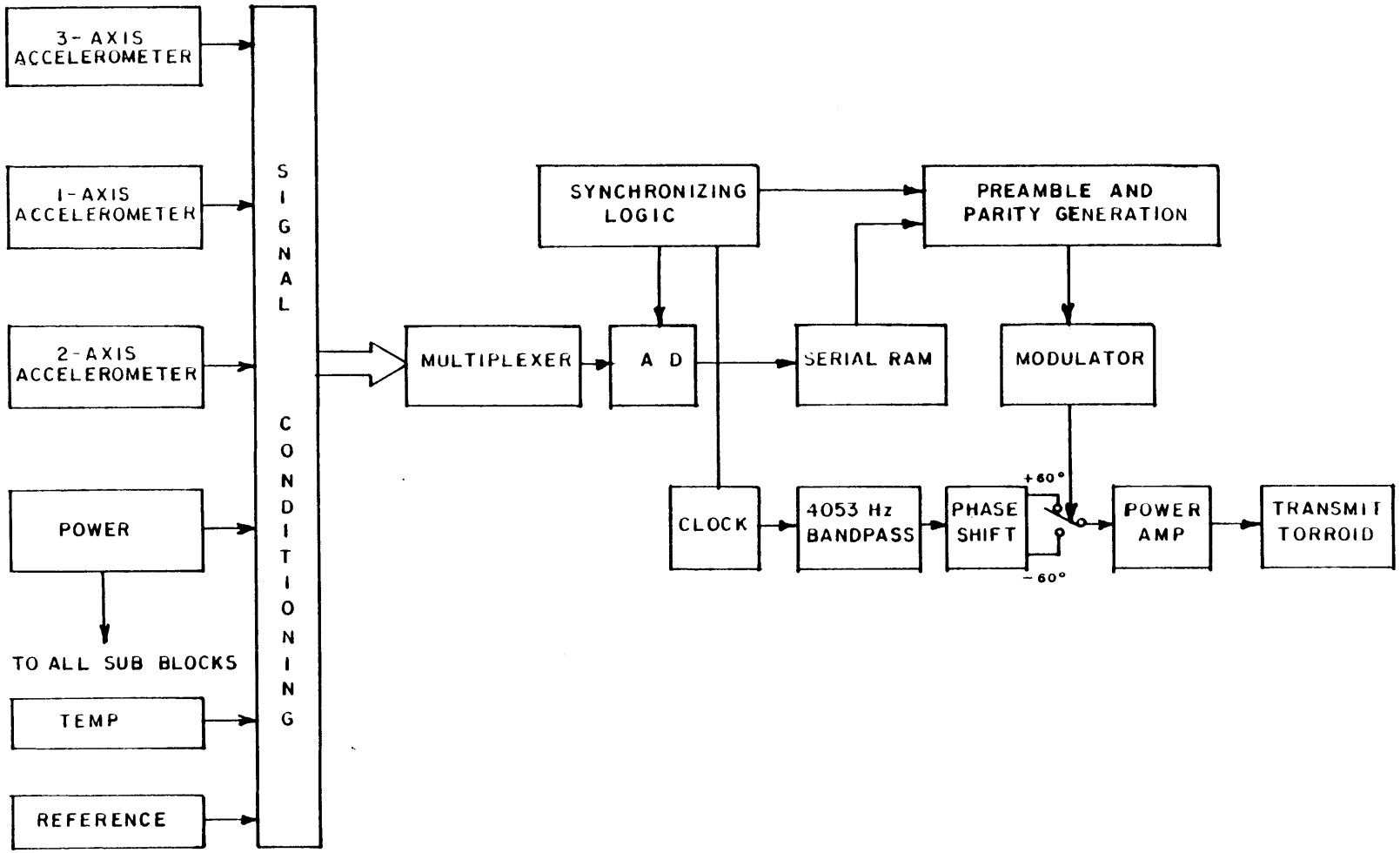

Figure 7. Block Diagram of Downhole Survey Tool

The sensor data transmission is preceeded by a long pulse of the carrier followed by a fixed message for receiving synchronization. The exact message and data format of the survey tool are contained in Appendix B. The transmitter output is efficiently coupled to the drill string by the transmitting transformer. The transmitting transformer is oriented such that it induces a true electric field into the drill string. The return path for the electric current is through the surrounding coal.

The signal on the drill string is picked up at the surface by the Receiving Transformer, Figure 8, and then passed via the toriod cable.

The receiving Transformer is mounted on the drill rig at the surface so that the drill pipe passes through it. The Processor, which includes the computer and receiver, is adjacent to the drill rig.

As mentioned before the survey tool contains a triaxial magnetometer, a biaxial accelerometer, and a single axis accelerometer. These sensors are used to measure the vector relationship in each axis to the earth's magnetic field and the earth's gravitation vector. Figure 9 shows graphically the directions of the earth's vector.

The Processor utilizes an automatic gain ranging, variable bandwidth phase lock technique for maximum separation of the signal from the noise. The Processor then calculates the bearing and inclination of the downhole unit.

When given the length of drill pipe sections, the Processor calculates the location of the bit and its deviation from the desired course.

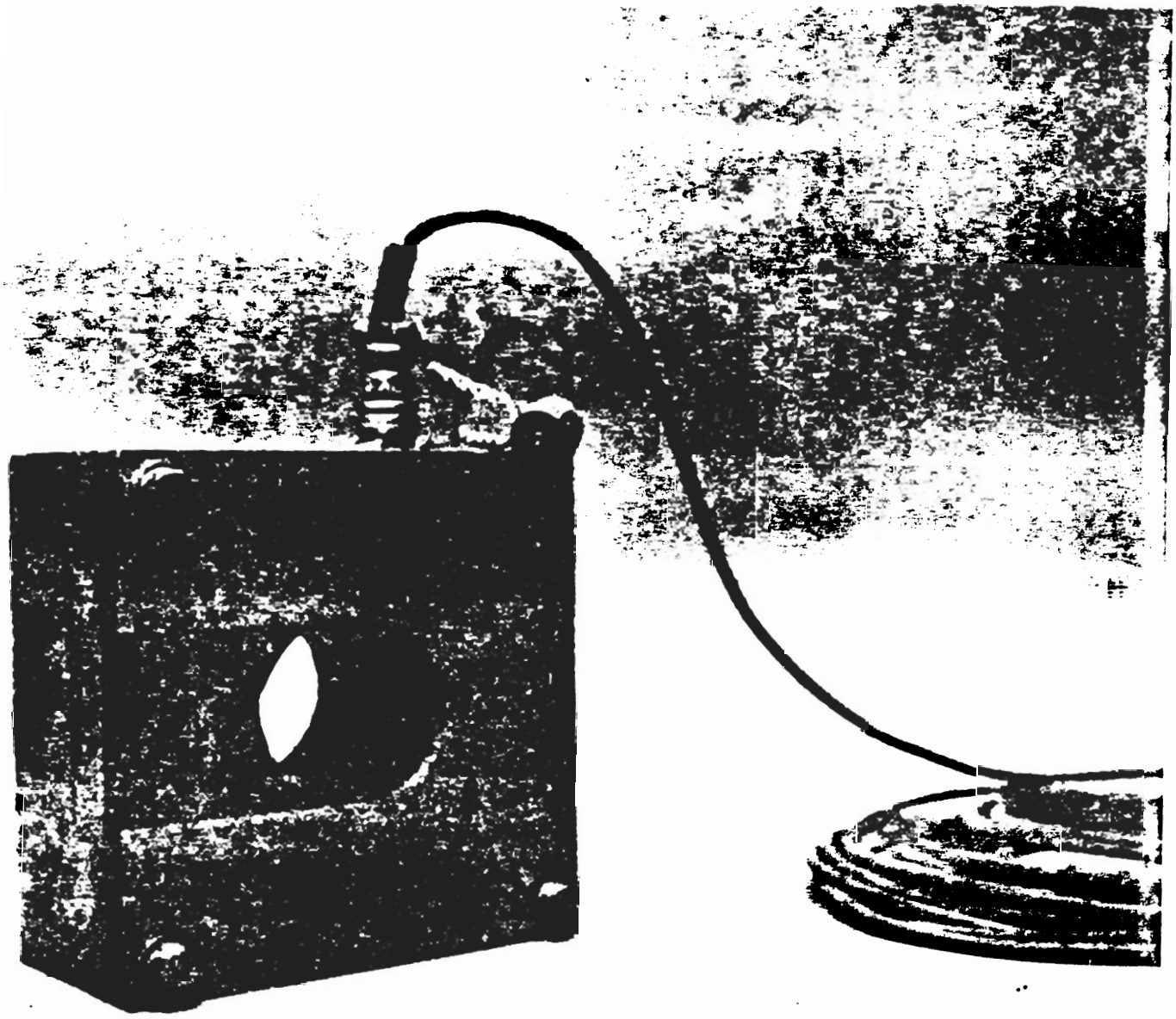

Figure 8. Receiving Transformer

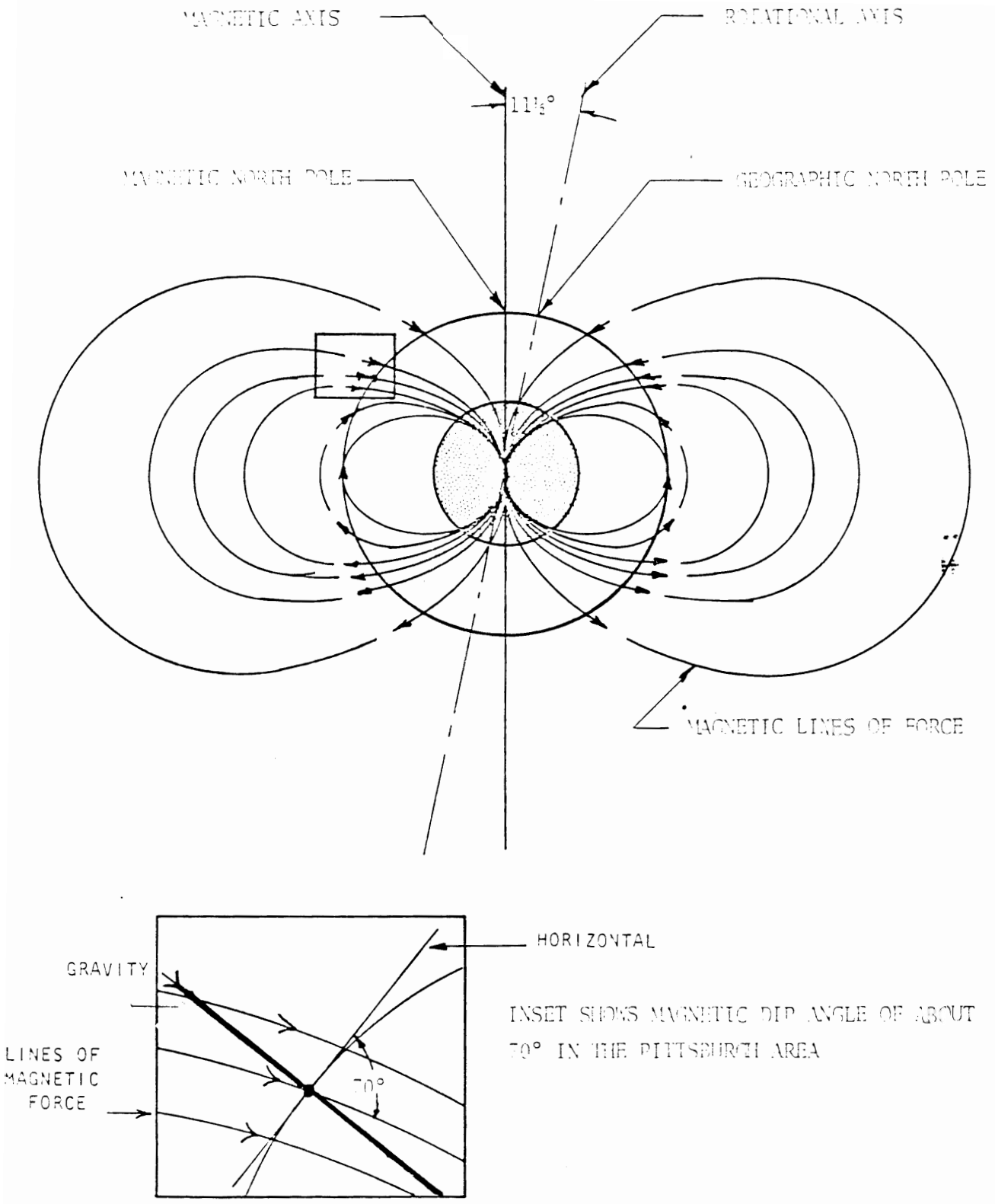

Figure 9. Direction of Earth's Magnetic and Gravatational Vectors

Figure 10 is a block diagram of the system receiver. Figure 11 is a block diagram of the microprocessor based processor and display unit.

When the processor receives data from the system receiver it performs several functions. First, it does data error testing by examining that data parity is correct and that the raw data values are within reasonable limits. Following the data checking, the processor then processes the received data to calculate the necessary parameters for the survey. Finally, the processor displays on its front panel those parameters that the drill operator needs to know such that he can initiate drill actions to guide the drill within the coal seam. Appendix D contains the detailed schematics of the survey tool, receiver and processor. Also includes are the software program listings employed by the processor. Appendix E contains a discussion of the computer algorithms that are employed by the processor.

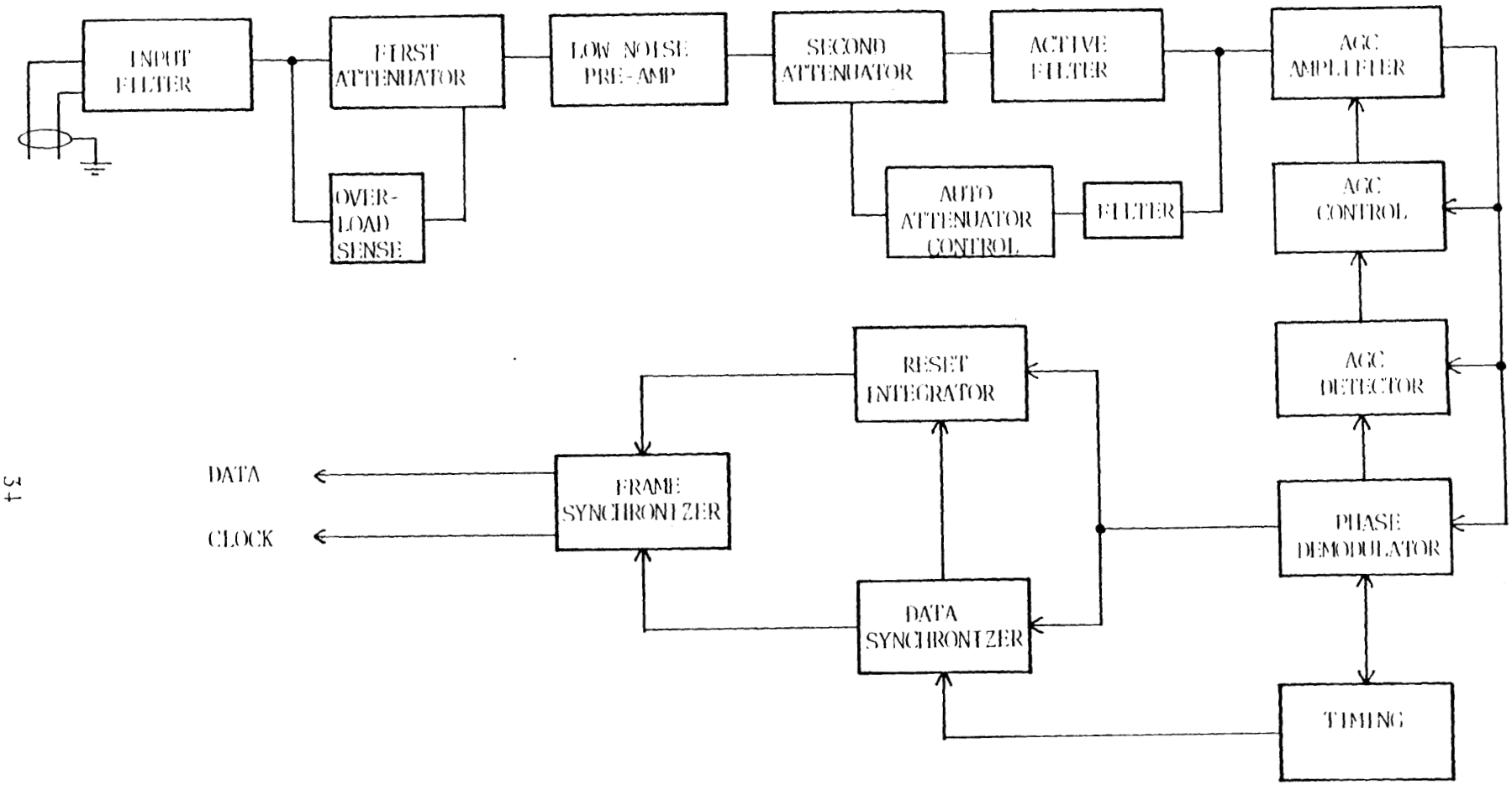

Figure 10. Telemetry Receiver Block Diagram

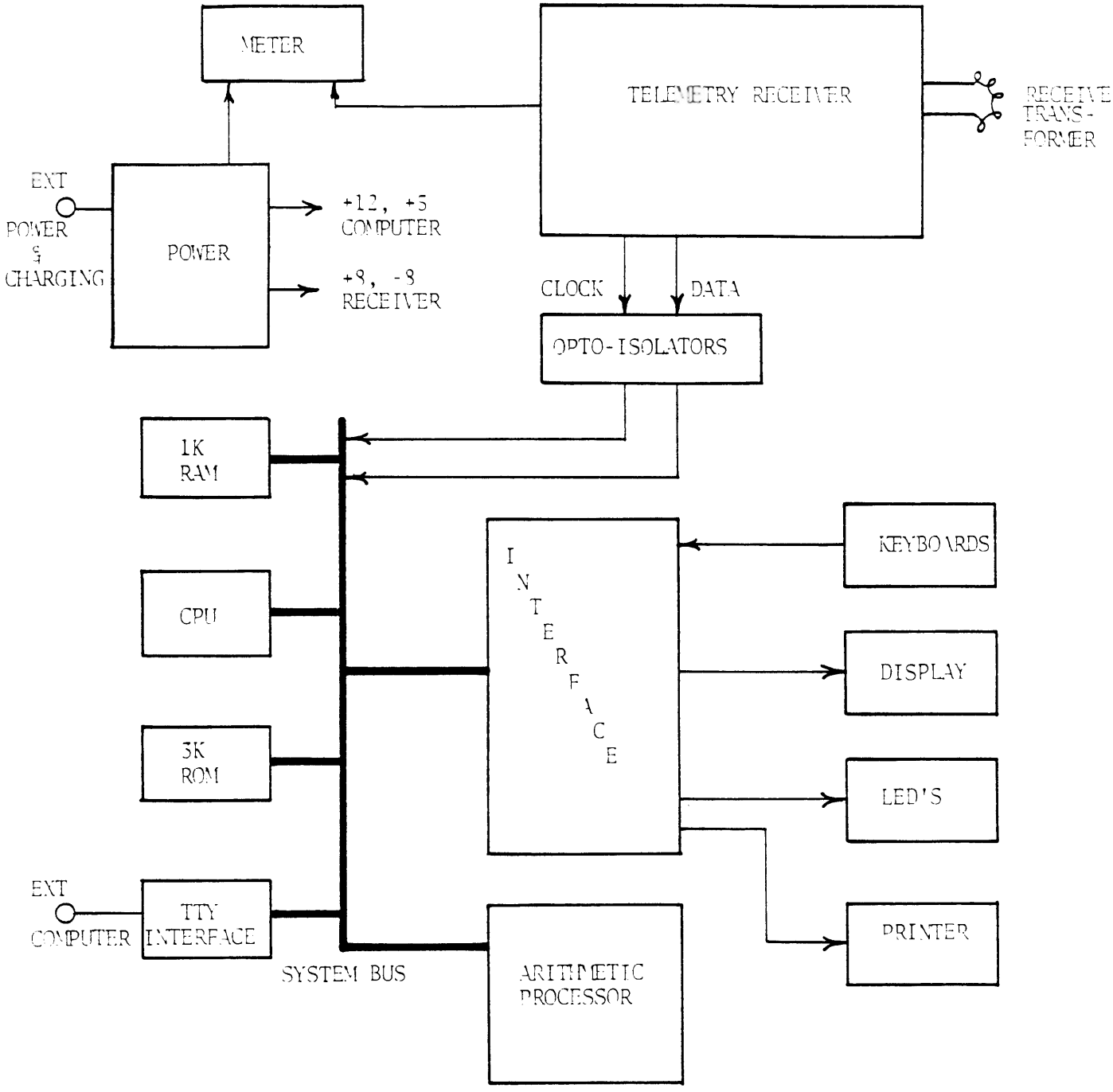

Figure 11. Block Diagram of Uphole Processor and Display Unit

4. CONCLUSIONS AND RECOMMENDATIONS

The Cableless Survey System developed in this project has proved that drilling efficiency can be enhanced when detailed drill bit position is made available to the drill operator in near real time environment. Field tests have shown the CSS is as accurate as previous methods for borehole surveying and saves time in that the survey tool can withstand the drilling shock and vibration. The uphole receiver processor has proven to be reliable and most importantly portable.

As with any project of this nature, looking back over the final design as it related to operational use there are, of course, some recommendations that ENSCO, Inc. feels would significantly enhance the tools operation. Efforts to further utilize, upgrade and improve the system should be continued.

The following is a list of recommendations by subsystem that should be explored in any further development.

PROCESSOR

- Access to the values of average inclination and bearing that the Processor uses for advancing the survey will allow projection of hypothetical surveys.
- Allow initial values for seam dip angle and vertical depth in the seam so the computer will read out (on demand) the current vertical seam depth.
- Extend the memory by 2K-4K to allow for program expansion.
- Change the batteries used to take advantage of recent improvements in sealed lead acid cells.

SURVEY TOOL

- Break the package about 10 feet back from the front end so a stabilizer can be put at a more effective distance from the front and to make the package more manageable.

- Change the batteries to lead acid. They are more durable and need fewer inter-cell connections.

- Use a pumpable battery pack or downhole water turbine generator (could also be used to measure water flow).

- Develop sensors to read thrust, RPM and torque.

- Lighten the inner canister.

- Operate the tool as radio source to get attenuation curves in coal and other media.

- Reduce the outside diameter of the downhole package to allow more drilling control.

- Provide two way radio communication to eliminate the need for water pressure triggering.

- Design a new means for lengthwise compensation of the inner sections. The existing rubber cushions take a set and are difficult to install.

APPENDIX A

Phase I - Computer Analysis of Survey Results

Error Analysis of Downhole Tool

SURVEY RESULTS

During Phase I the CSS was field tested by surveying a horizontal borehole. The hole was also surveyed with the Sperry-Sun device. The results of both surveys were fed into a computer and comparisons made between the two. Since the Sperry-Sun device is subject to reader interpretation, the films were interpreted by two readers and their results averaged.

An obvious discrepancy in survey depth between the Sperry-Sun and ENSCO surveys is evident in Figures 12a and 12b. Figure 12a compares the two surveys without a depth correction, while the comparison in Figure 12b includes a 10 ft. depth reduction in the ENSCO survey at the 200 ft. point. The greatly improved correlation between surveys in Figure12b indicates that an error in survey depth was made and comparison of the ENSCO and Driller's logs reveals that the first survey point on March 16 was taken at 200 ft. but was improperly entered in the ENSCO log as 210 ft., creating the 10 ft. offset. The depth correction was made before final survey data was processed in the computer and is included in the data used in the following discussion.

The inclinations of the two surveys are represented graphically in Figure13 and the correlation between the surveys is excellent, especially when standard deviation of 1.134° between the two readers of the Sperry-Sun survey is considered. There does exist however a consistent negative bias between the ENSCO and the Sperry-Sun surveys. This bias becomes more apparent when the plots of vertical deviation for the two surveys are compared in Figure 14. The accompanying plot of the difference between the vertical deviation of the two surveys depicts an ENSCO survey bias of about +0.106°. Since the ENSCO procedure of taking two readings, separated in rotation at 180°, at each survey point would have removed any internal bias errors, the difference must be attributed to external factors such as the bit rise created by the use of only a front stabilizer or a sag in the non-magnetic extension between the bit

DEPTH CORRELATION COMPARISON

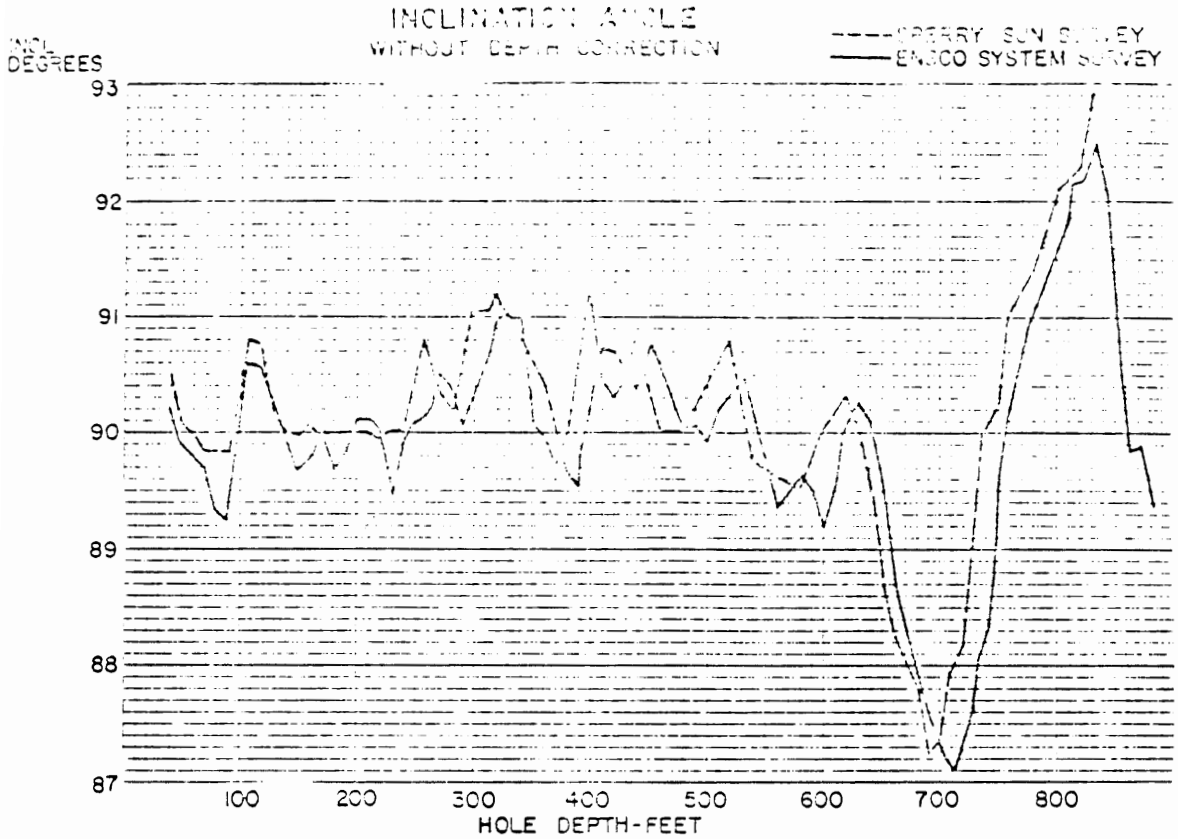

Figure 12a.

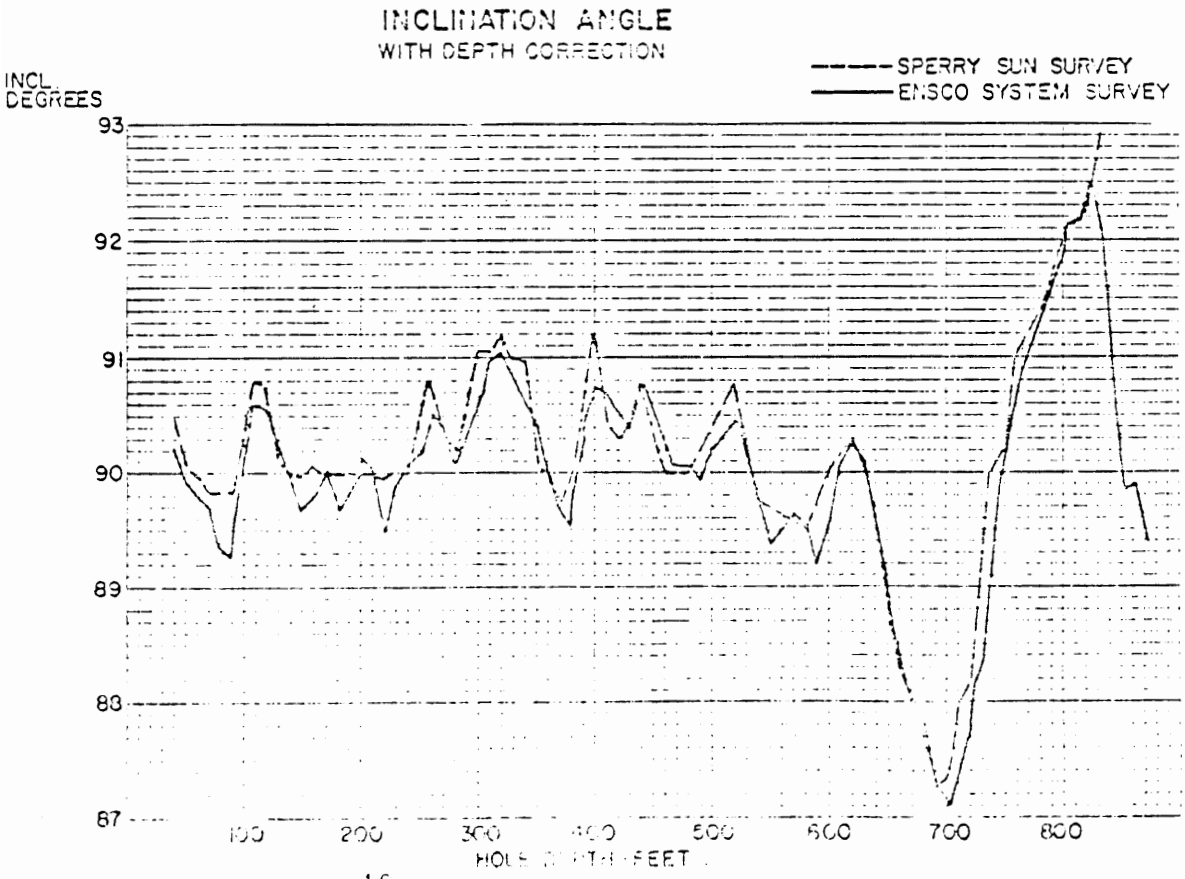

Figure 12b.

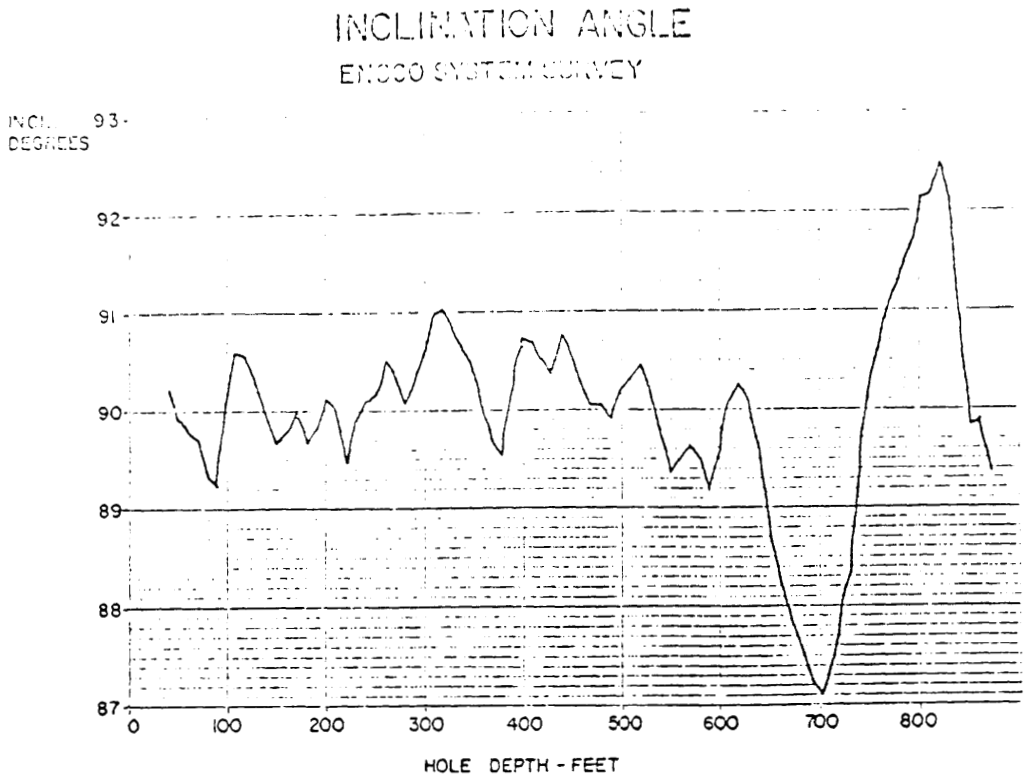

Figure 13a.

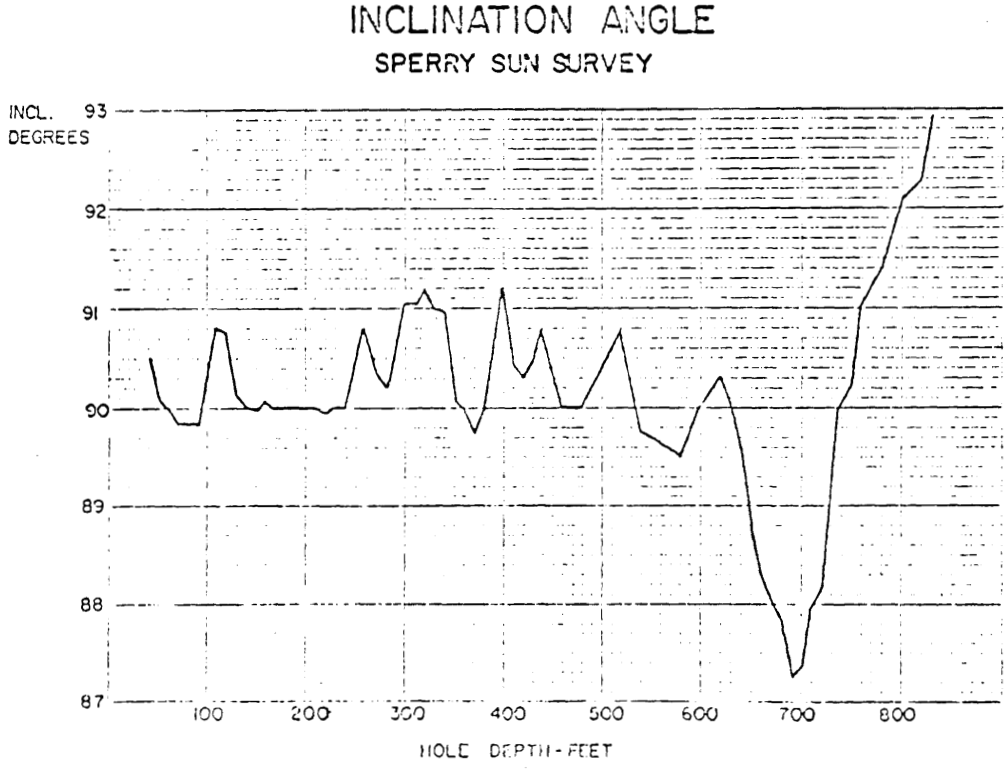

Figure 13b.

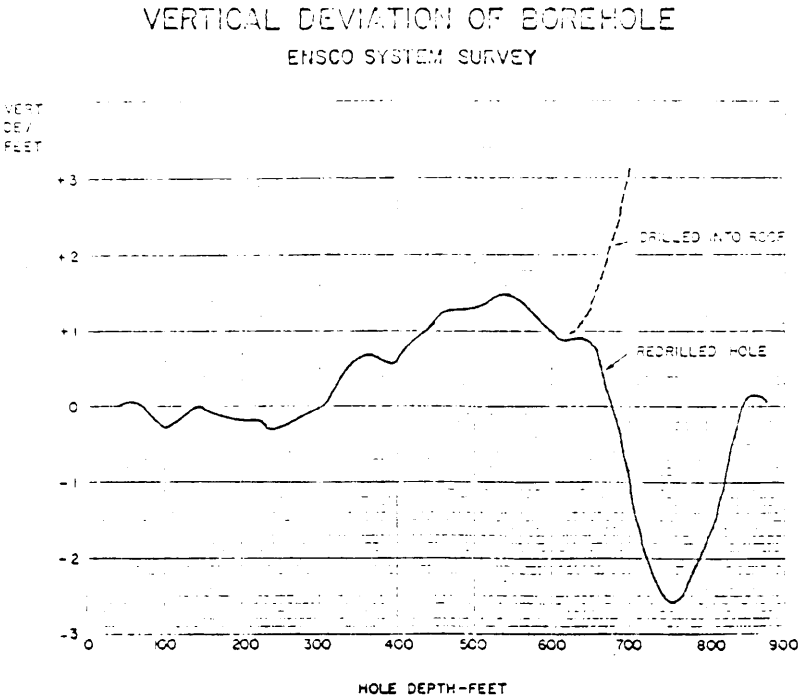
VERTICAL DEVIATION OF BOREHOLE
ENSCO SYSTEM SURVEY
VERT DEV FEET
+3
+2
+1
0
-1
-2
-3
DRILLED INTO ROOF
REDRILLED HOLE
0
100
200
300
400
500
600
700
800
900
HOLE DEPTH-FEET

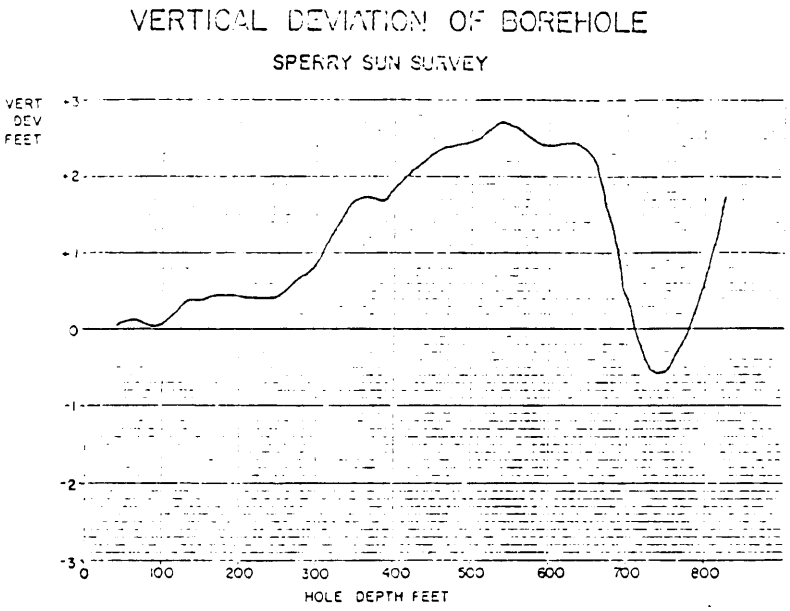
VERTICAL DEVIATION OF BOREHOLE
SPERRY SUN SURVEY
VERT DEV FEET
+3
+2
+1
0
-1
-2
-3
0
100
200
300
400
500
600
700
800
HOLE DEPTH FEET

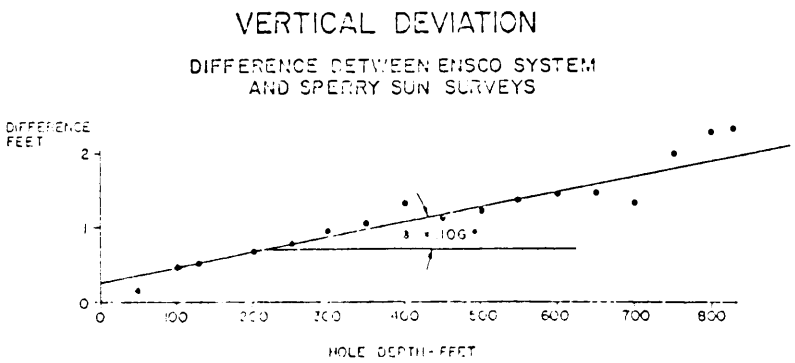
VERTICAL DEVIATION
DIFFERENCE BETWEEN ENSCO SYSTEM
AND SPERRY SUN SURVEYS
DIFFERENCE FEET
2
1
0
.106
0
100
200
300
400
500
600
700
800
HOLE DEPTH-FEET

Figure 14

and the sensor system. Even with the bias, the surveys still compare very well with discrepancy of only 2.38 ft. in a 830 ft. hole. The ENSCO plot of vertical deviation includes the plot of the survey when the drill went into the roof and the hole was redrilled.

Azimuth plots for the two survey systems are shown in Figure 15 The Sperry-Sun graph includes a plot of the first survey taken March 17th and a plot of the average of two readers for the final survey. The surveys have some points of discrepancy, but once again excellent overall correlation exists. The lateral deviation plots (Figure 16 are very close with a maximum difference of only 1.17 feet and a difference of only .76 feet at the 830 ft. depth. Only the two reader averages of the final Sperry-Sun survey were used in the deviation plots. It should be noted that a standard deviation of 0.78° exists between the first and second Sperry-Sun surveys and standard deviation of 0.18° exists between the two readers of the final Sperry-Sun survey. The ENSCO survey was also the average of two different survey points as shown in Figure 17. The ENSCO survey procedure was designed to cancel errors by taking two survey points at each depth with an angular package rotation of 180° between points.

The source of the differences between the ENSCO and Sperry-Sun surveys is not clear and the correlation between the two seems more than adequate for this application. It will be noted that the two Sperry-Sun surveys have an initial bias difference between them of approximately 1°. The survey tool was initially aligned against the first Sperry-Sun survey. Since all three runs (2 Sperry-Sun and one Survey Tool run) agree very well except for this bias difference, we are inclined to believe that there is an offset error in the Sperry-Sun tool.

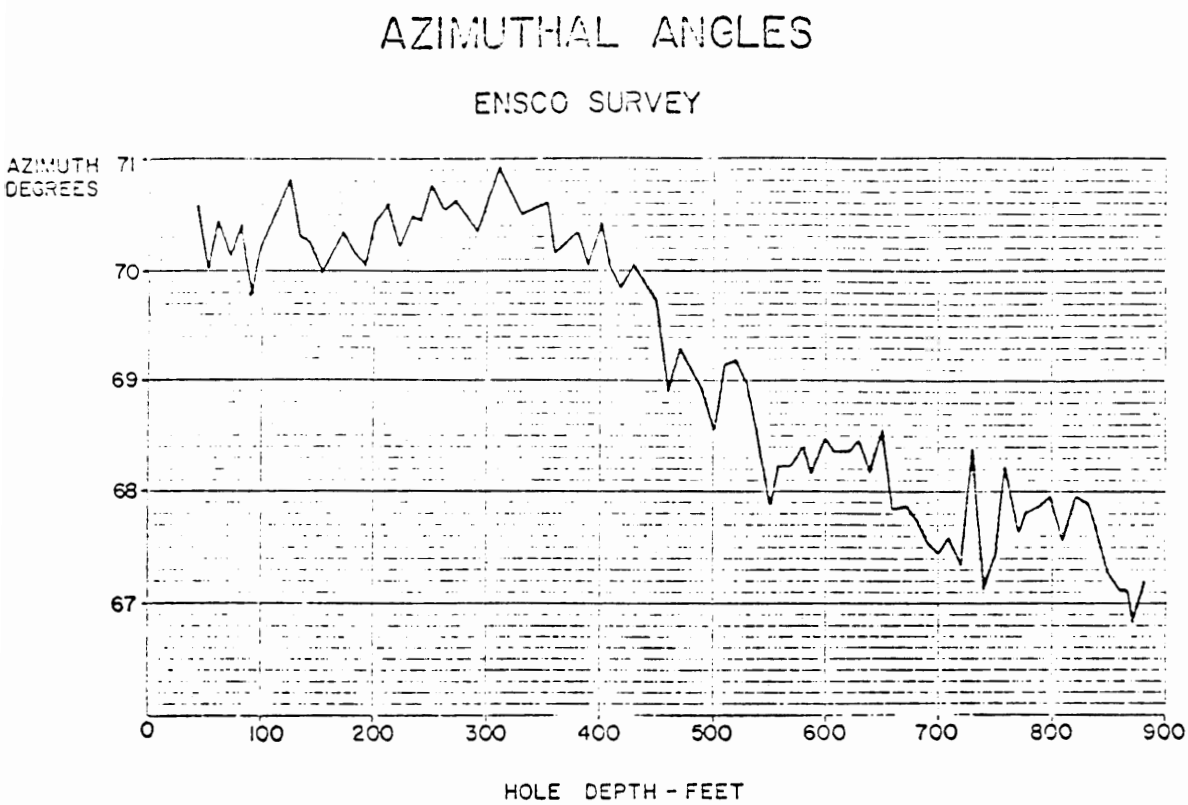
AZIMUTHAL ANGLES
ENSCO SURVEY
AZIMUTH DEGREES
71
70
69
68
67
0
100
200
300
400
500
600
700
800
900
HOLE DEPTH - FEET

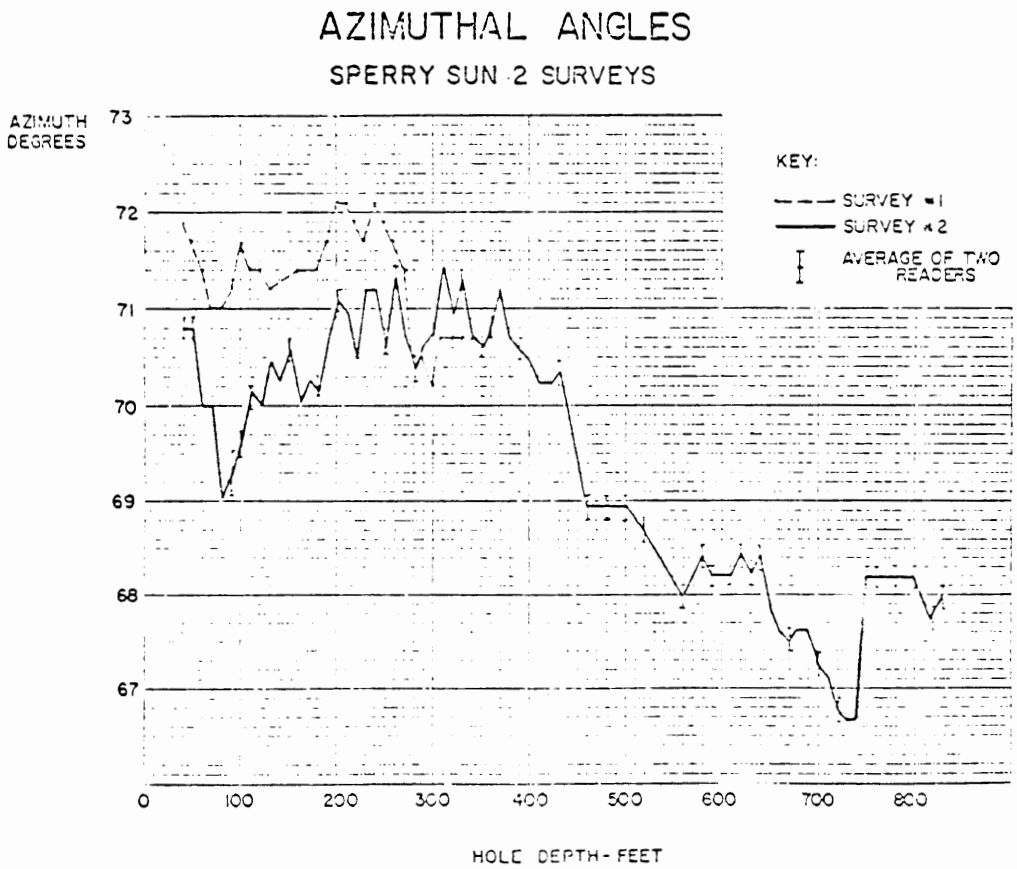
AZIMUTHAL ANGLES
SPERRY SUN 2 SURVEYS
AZIMUTH DEGREES
73
72
71
70
69
68
67
KEY:
SURVEY #1
SURVEY #2
AVERAGE OF TWO READERS
0
100
200
300
400
500
600
700
800
HOLE DEPTH - FEET

Figure 15

ENSCO SYSTEM SURVEY

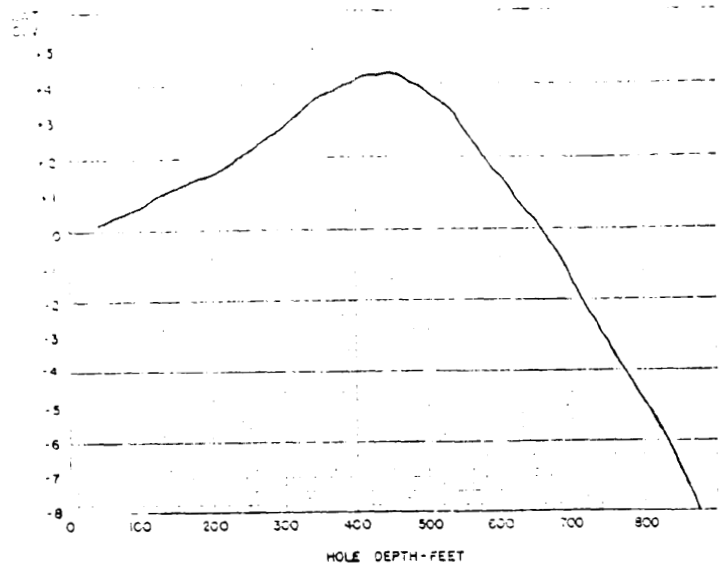

LATERAL DEVIATION

SPERRY SUN SURVEY

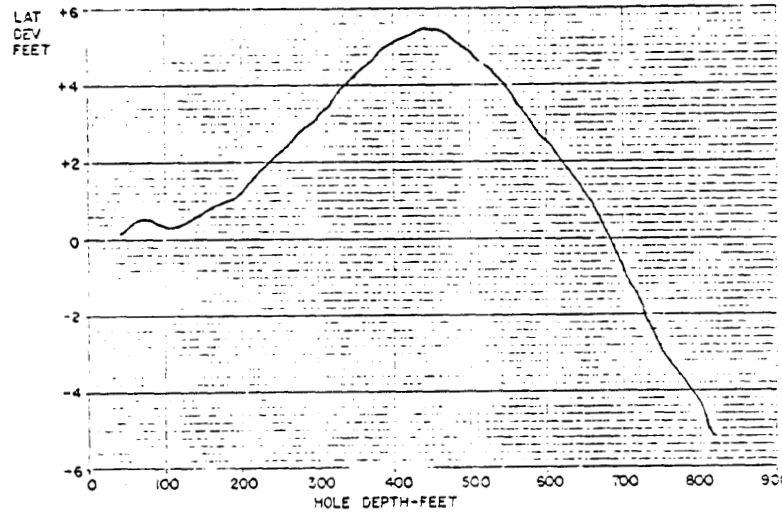

DIFFERENCE IN LATERAL DEVIATION

BETWEEN

ENSCO SYSTEM SURVEY AND SPERRY SUN SURVEY

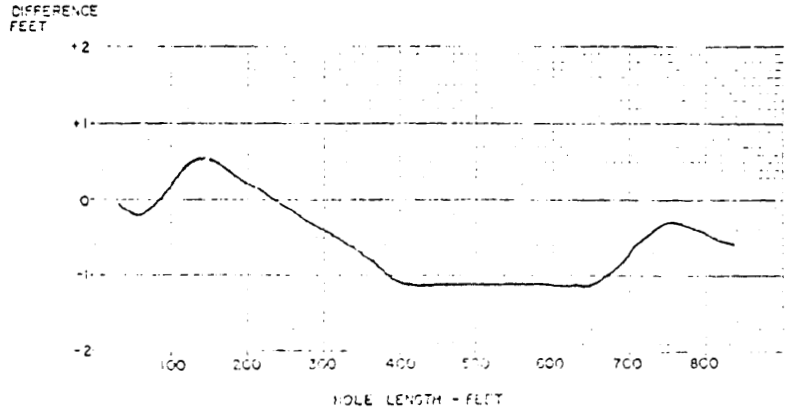

 Figure 16

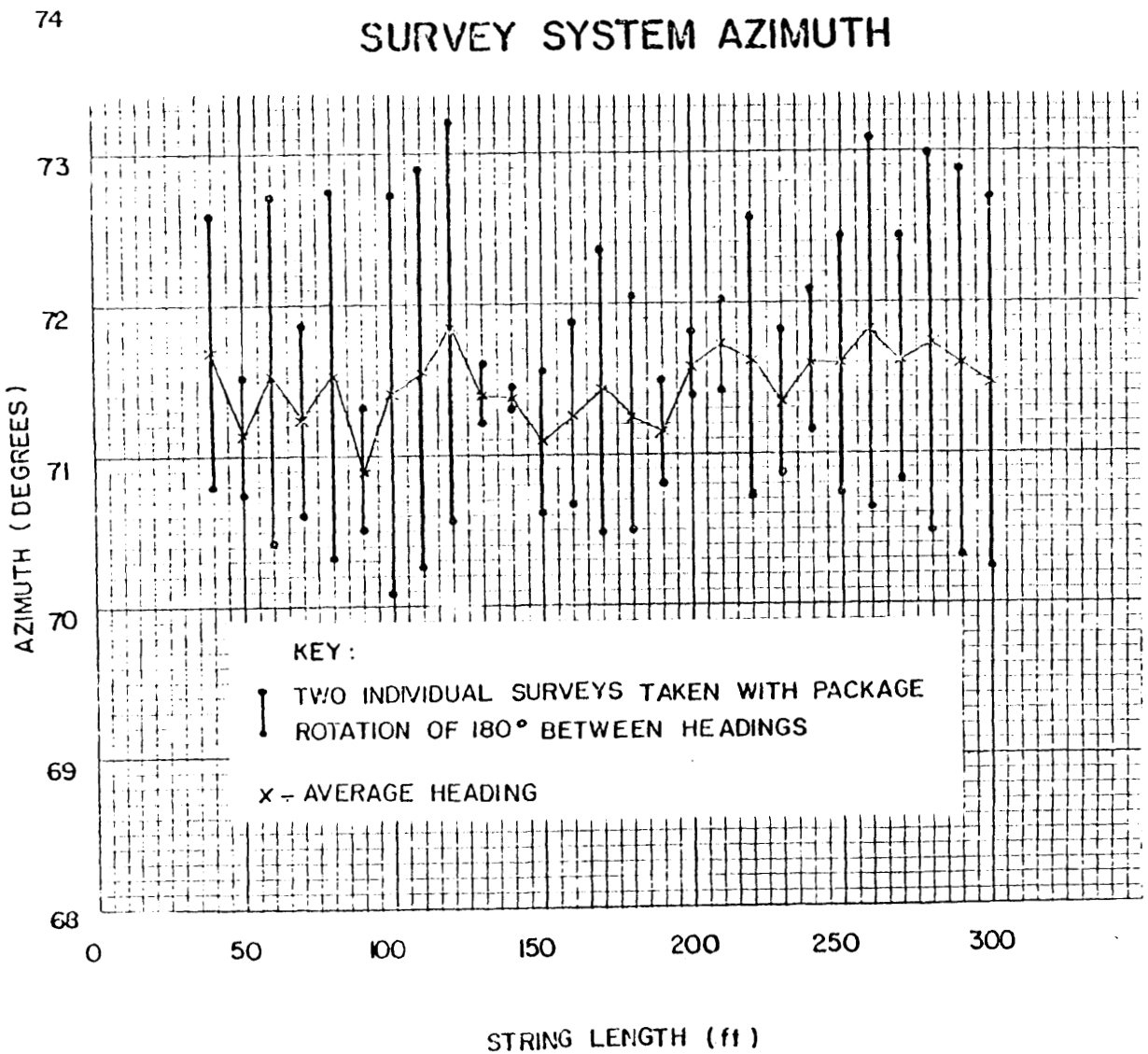
SURVEY SYSTEM AZIMUTH
AZIMUTH (DEGREES)
74
73
72
71
70
69
68
0
50
100
150
200
250
300
STRING LENGTH (ft)
KEY:
TWO INDIVIDUAL SURVEYS TAKEN WITH PACKAGE ROTATION OF 180° BETWEEN HEADINGS
x - AVERAGE HEADING

Figure 17

SPECIAL TESTING

During drill operation, significant non-linear variations in azimuth corresponding to angular package rotation were experienced as shown graphically in Figure 18a. The magnitude of these variations prompted a series of tests, relating magnetometer outputs to angular rotation, to define the source of this non-linearity.

The first test involved rotating the assembled inner package through 360° of roll in 10° intervals and triggering the package at each interval. The package outputs were picked up by the receiver, logged and processed in the computer as survey data. The resulting plot of azimuth versus package rotation (Figure 18b) reveals a variation of over ±1.5 degrees, indicating the existence of the problem without the outer canister in place. An analysis of the raw data indicated that the previously calculated magnetometer offset factors were no longer valid and a reduction in azimuth variation could be effected by offset correction.

The next step in the elimination process was to physically separate the sensor canister from the electronics canister, while retaining the electrical integrity. The resulting data had slightly less variation with rotation than data taken with the complete package, but the same character was retained, as shown in Figure 18c. The effect of the electronic canister does not appear to be a problem.

The next step was to disassemble the sensor canister, noting the resultant changes in magnetometer outputs associated with each component's removal. The component having the greatest effect was the accelerometer, followed by much smaller but significant changes associated with the magnetometer alignment rods and outer sensor canister itself. Data on the magnetometer alone shows some reduction in azimuth variation

AZIMUTH DIFFERENCE (DEGREES)

(EACH CASE NORMALIZED TO ITS MEAN AZIMUTH)

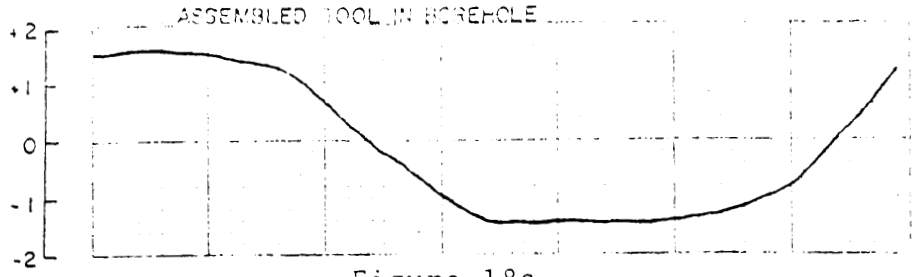

Figure 18a.

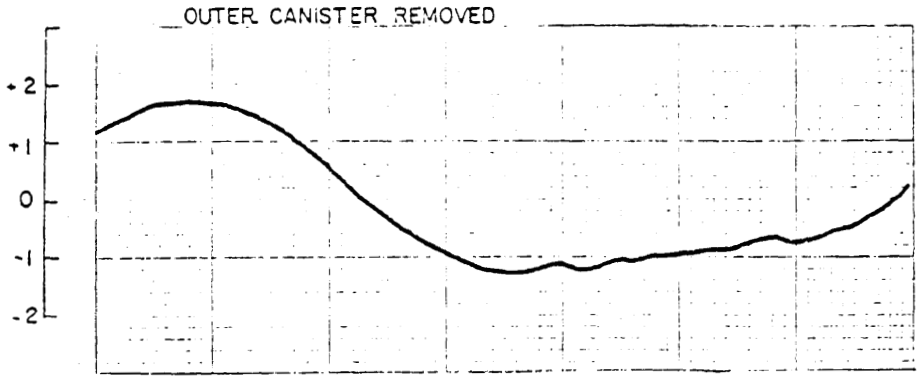

Figure 18b.

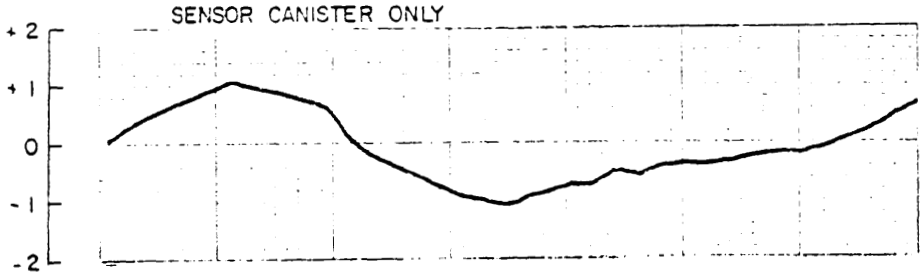

Figure 18c.

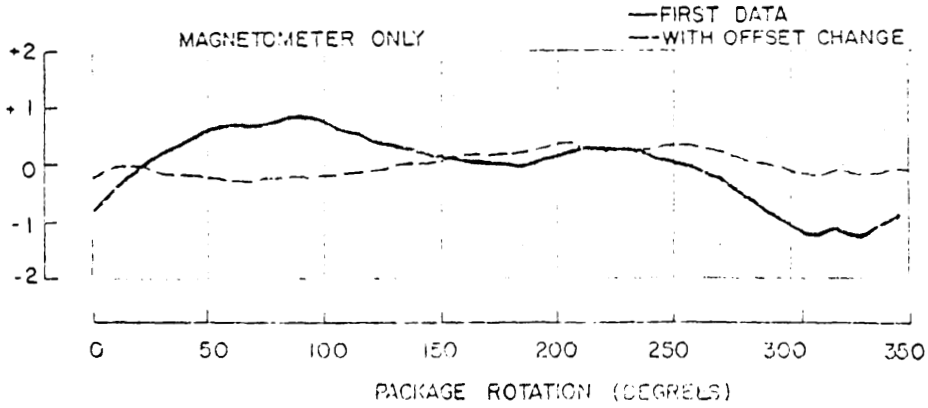

Figure 18d.

with rotation but more importantly the character of the variation was significantly different. This indicated that a change in the magnetic environment of the magnetometer had occurred.

The axis offsets were greatly changed so new offset factors, derived from current experiments, were inserted in the program. The resulting data contains only a $\pm .35°$ variation in azimuth with rotation as shown in Figure 18d. It also possesses a character conducive to further reduction.

An attempt was then made to reduce the errors in previous configurations by appropriate changes in offset factors. A small improvement resulted in each case, but in no case was the error reduced less than $\pm 1°$.

The above testing indicates that either all sources of magnetic abnormalities in the sensor canister must be removed by relocation of components and degaussing or the procedure of taking two measurements at each survey point (with an angular package rotation of 180° between measurements) must be continued.

There was no requirement to investigate the potential limits of accuracy of this type of tool. However, the question of limiting accuracy of a magnetic tool is often asked. Figure 19 is a plot of heading degrees versus the rotational angle of the drill string taken over a reasonably straight section of the hole. An envelope containing the majority of these points is shown as the solid line. The mid point of this envelope is shown as the dotted line. The mean of all points with respect to the dotted line is 7.5×10^{-3} degrees. The standard deviation, σ, is .146°. The low value of the mean indicates that the dotted line represents a systematic variation which, with sufficient design or computational effort,

HEADING
VS
ROTATIONAL ANGLE

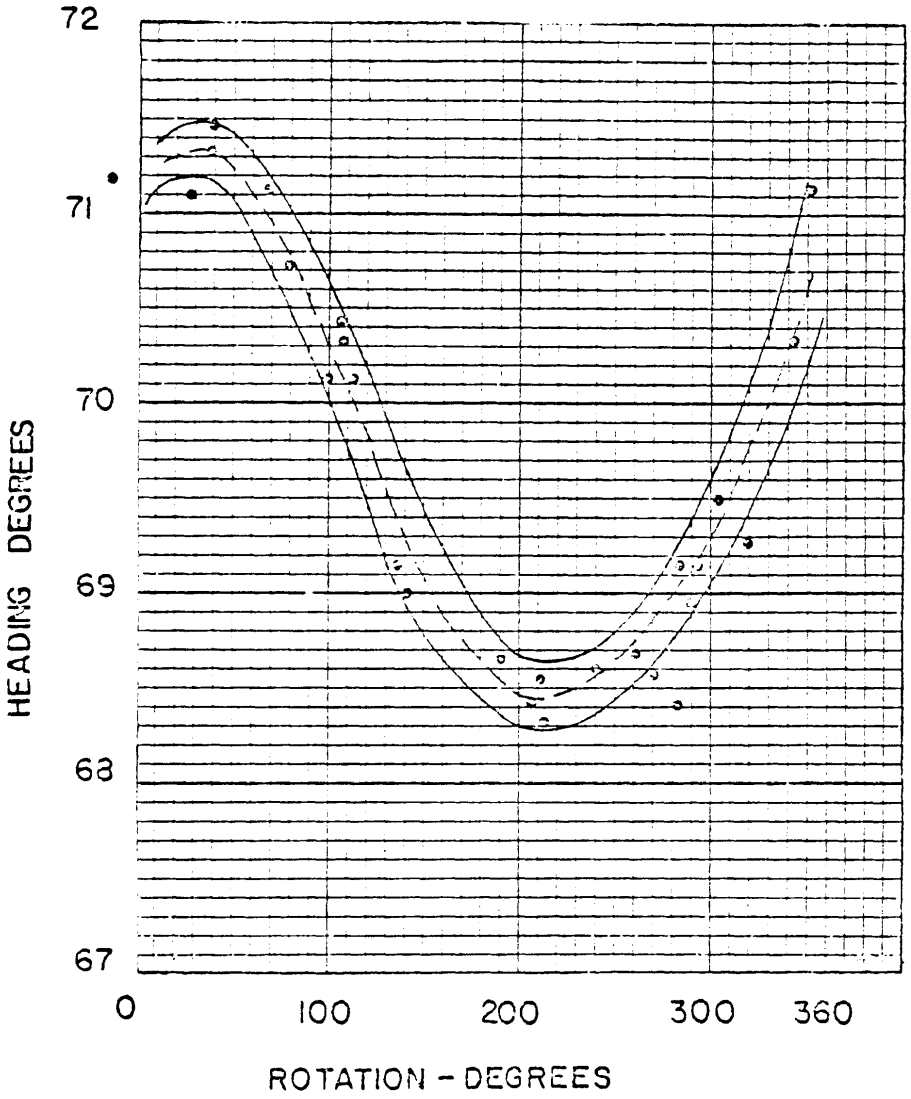

Figure 19

could be removed. The σ of .146° includes both actual changes in hole direction and statistical scatter of points. This indicates that a system such as this with an accuracy of better than $\pm$.1 degree is feasible.

ERROR ANALYSIS

CALCULATION OF LOCATION VECTOR

The RDS-500 computer was programmed to calculate the direction vectors for the down-hole package using the inputs from the package. In order to test these routines and to study the sensitivity of the calculations, simulated data was input to the programs.

Before discussing the results, the following terms must be defined:

α = dip angle of the magnetic vector
θ = dip of package with respect to the horizontal
ϕ = angle of package with respect to magnetic North
ψ = angle of rotation of a tick on the package with respect to vertical.

Using this terminology and the equations described in the proposal, we calculated θ, ϕ, and ψ given α and the direction cosines from the magnetometers and the accelerometer reading.

As was discussed in the proposal, when ϕ was near 0° or 180° (i.e. north or south), the calculations become more difficult. To show this, Figure 20 shows the standard deviation of the error from 100 runs of each direction when noise is added to the magnetometer channels. The amount of noise is comparable to a Gaussian white noise with a standard deviation of 1/2 degree. The error in ϕ is small (below 1°) for directions between 20° and 160°. However, the error goes up near the north or south directions. This is because ϕ is calculated as an arc cosine function. This has more error near these values and also it is impossible to tell when the reading corresponds to negative angles.

The ambiguity of negative angles of ϕ is impossible to resolve without an additional sensor on board. No combination of

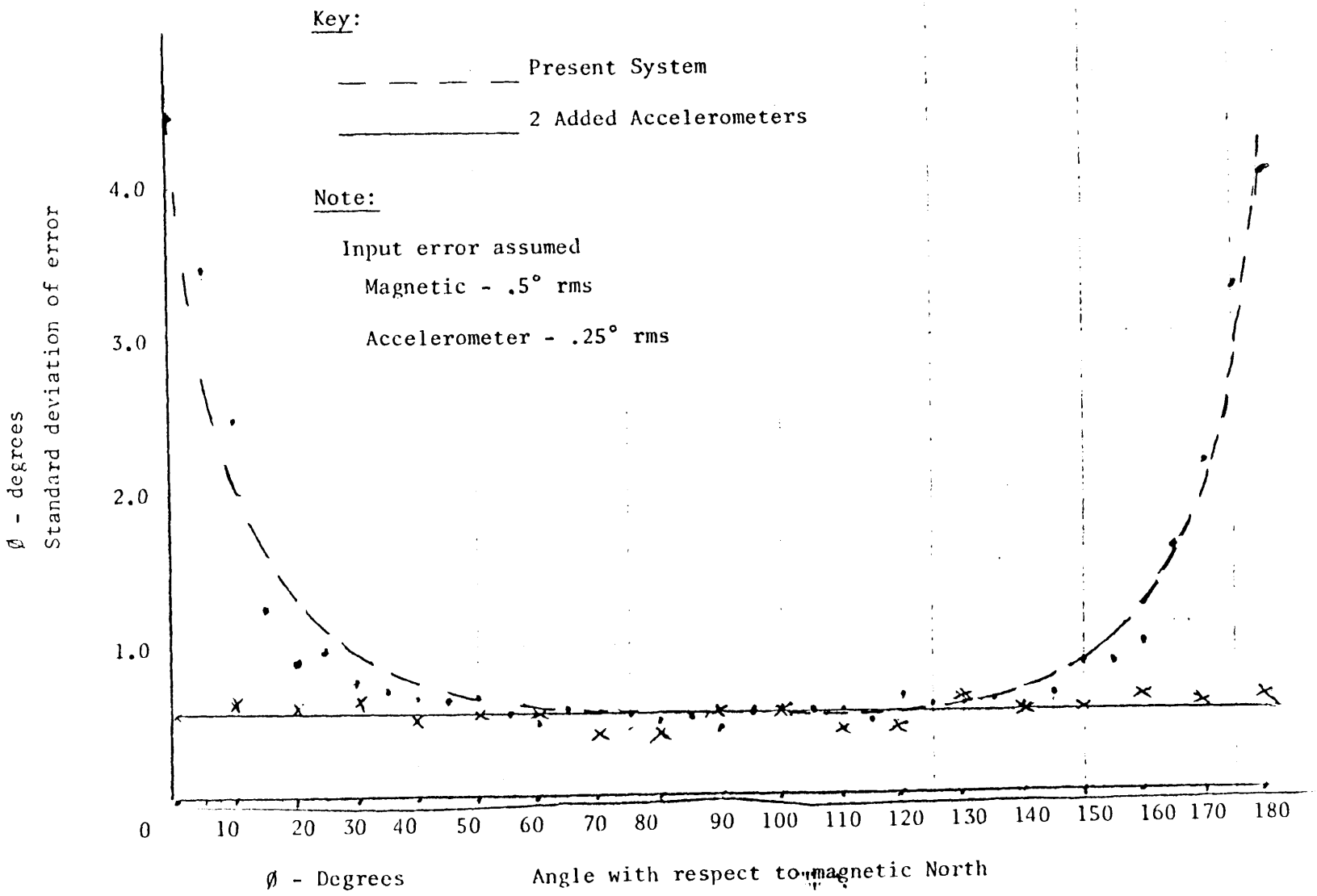

Figure 20. RMS Heading Error Vs. Heading Angle

mathematical tricks or package rotations can resolve this ambiguity.

As discussed in the proposal, two additional ambiguities exist. When the package is aligned with the magnetic vector, it is impossible to resolve the angle ψ. The final ambiguity exists when $\theta = 90°$ (i.e. drilling in a vertical direction).* Figure 21 shows this result. This figure is a plot of the error in ϕ as a function of θ for $\phi = 90°$.

The ambiguity of not knowing whether the package is pointing west or east of north can be relieved by telling the system the initial direction as was done previously. However, if the direction is close to the North direction small measurement errors will cause larger direction errors.

The system was next programmed for the equations using two added accelerometers. The comparative error curves are shown on Figure 1. This step would reduce all errors due to geometrical factors with the possible exception of the elevation angle. Although we have not investigated it in detail, it is believe that even these errors could be eliminated using alternate algorithms. The added accelerometers also eliminate the ambiguities which exist in the present system.

---

*It should be recorded however that the system was never intended for vertical work. The original specification in fact limited the angles to horizontal, plus or minus 45°. Thus, the ambiguity associated with drilling along the magnetic vector was prohibited.

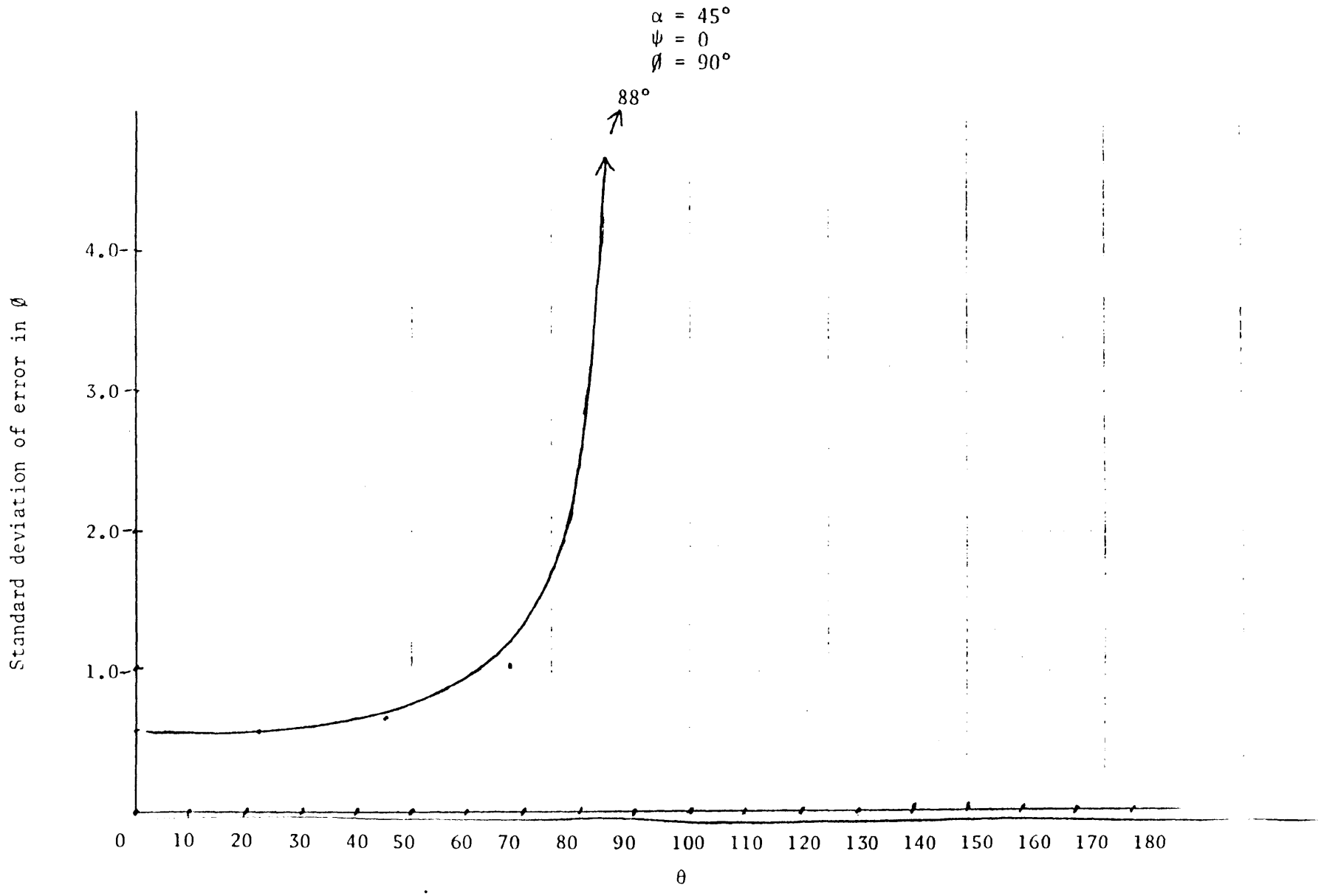

Figure 21. RMS Elevation Error Vs. Elevation Angle

APPENDIX B

CABLELESS SURVEY SYSTEM DOWNHOLE TOOL SPECIFICATIONS

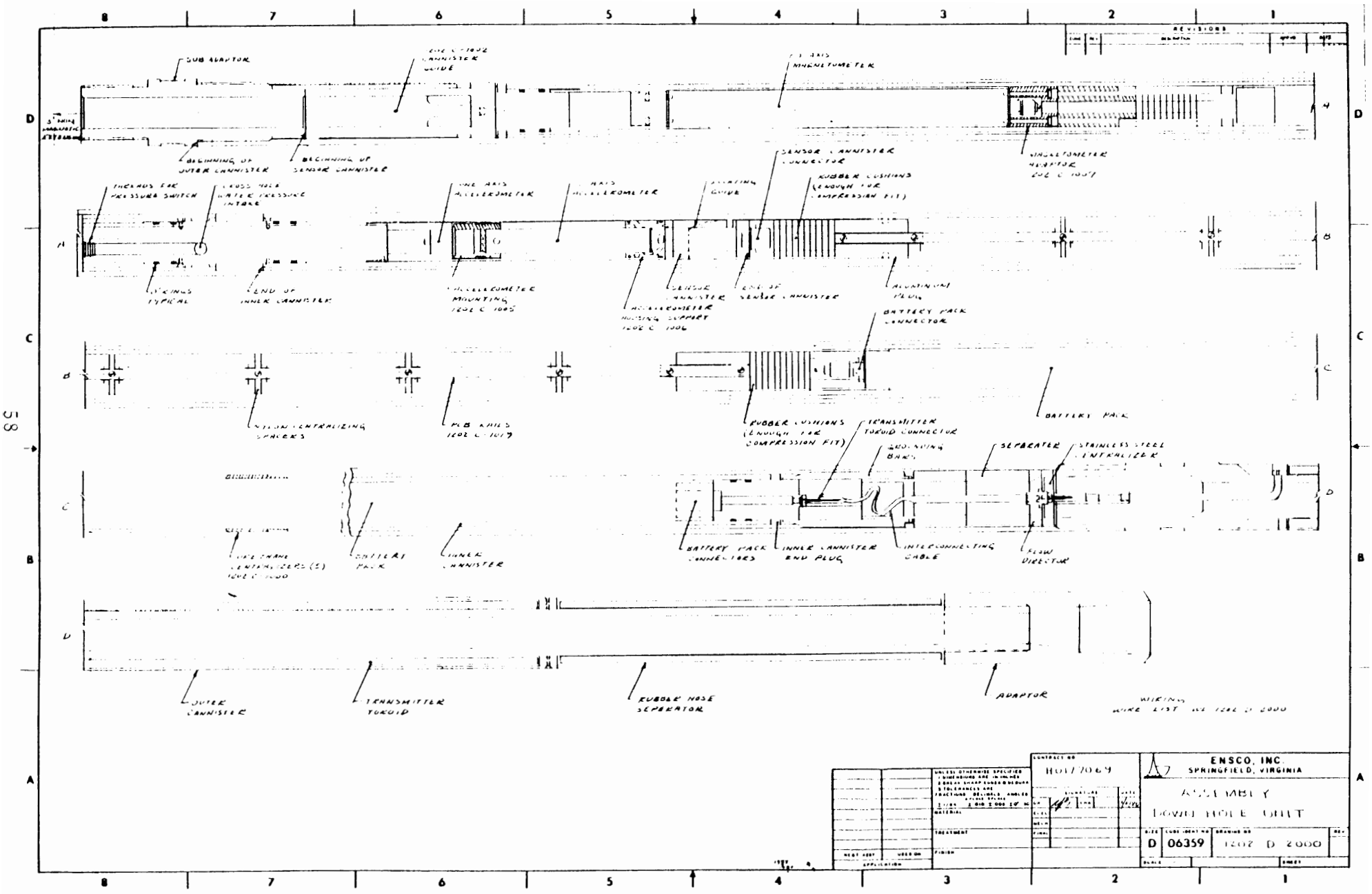
SUB ADAPTOR
BEGINNING OF OUTER CANNISTER
BEGINNING OF SENSOR CANNISTER
THREADS FOR PRESSURE SWITCH
CROSS HOLE WATER PRESSURE INTAKE
ONE AXIS ACCELEROMETER
ONE AXIS ACCELEROMETER
SENSOR CANNISTER CONNECTOR
RUBBER CUSHIONS (ENOUGH FOR COMPRESSION FIT)
MAGNETOMETER ADAPTOR
END OF INNER CANNISTER
ACCELEROMETER MOUNTING
SENSOR CANNISTER
END OF SENSOR CANNISTER
ALUMINUM PLUG
BATTERY PACK CONNECTOR
NYLON CENTRALIZING SPACERS
PCB RAILS
RUBBER CUSHIONS (ENOUGH FOR COMPRESSION FIT)
TRANSMITTER TOROID CONNECTOR
BATTERY PACK
SEPARATOR
STAINLESS STEEL CENTRALIZER
BATTERY PACK
INNER CANNISTER
BATTERY PACK CONNECTORS
INNER CANNISTER END PLUG
INTERCONNECTING CABLE
FLOW DIRECTOR
OUTER CANNISTER
TRANSMITTER TOROID
RUBBER HOSE SEPERATOR
ADAPTOR
ENSCO, INC.
SPRINGFIELD, VIRGINIA
ASSEMBLY
LOWER HOLE UNIT
D
06359
1202 D 2000

Figure 22.

CABLELESS SURVEY SYSTEM DOWNHOLE TOOL OUTPUT SPECIFICATION

Carrier Frequency: 4.0527KHz ± .005% Crystal Controlled

Transmitter Output Power: 1 watt nominal to input of transmit Toriod) varies with coupling conditions)

Modulation: Manchester Code ± 60° Phase Modulation

Data Rate: 31.66Hz = Carrier divided by 128

Transmitter Sequence:	16 Seconds	0° Phase Shift Carrier
	4 Seconds	All 1's data
	32 Bits	Preamble
	30 Bits	Random Data (Not Used)
	130 Bits	Ten 12 Bit Data Channel Parity

- Upon triggering the downhole tool transmits 16 seconds of 0° phase shift carrier (no modulation) which is used by the receiver to establish carrier phase lock and auto gain range.

- The downhole tools follows the carrier with 4 seconds of all 1's data which is used by the receiver to establish the data clock phase lock.

- The downhole tool follows the all 1's with a 32 bit preamble which the receiver uses to acknowledge that the upcoming data is real and prepares to alert the microprocessor.

The preamble code is:

10110000110111001011000011011100

If the exact code is not recognized, the receiver will ignore the remainder of the transmission.

- The next 30 bits of data transmitter are sent to the microprocessor but are thrown away as meaningless.

- The last 130 bits are transmitted and received by the receiver and serially passed onto the microprocessor unchanged. They represent 10 channels of 12 Bit offset binary data plus one parity bit per channel as outlined below:

	MSB											LSB	P
1 channel data + parity:	1	2	3	4	5	6	7	8	9	10	11	12	13

TIME→

	MSB											LSB	
A/D Scaling:	0	0	0	0	0	0	0	0	0	0	0	0	+ Full Scale + 5.000 Volts
	0	0	0	0	0	0	0	0	0	0	0	1	+ Full Scale - 1 Count = 4.99976 Volts
	0	1	1	1	1	1	1	1	1	1	1	1	+ 1 Count = 0.0024 Volts
	1	0	0	0	0	0	0	0	0	0	0	0	Zero
	1	0	0	0	0	0	0	0	0	0	0	1	- 1 Count = 0.0024 Volts
	1	1	1	1	1	1	1	1	1	1	1	0	- Full Scale + 1 Count = 4.9951 Volts
	1	1	1	1	1	1	1	1	1	1	1	1	- Full Scale = 4.9976 Volts

Parity: Parity is a single bit for each channel that is based on the number of 1's output by the A/D and is added only to maintain even longitudinal parity.

Channel Assignment:

Ch. 1: Magnetometer X Axis ± 0.7 gauss = ± 5 volts

Ch. 2: Magnetometer Y Axis ± 0.7 gauss = ± 5 volts

Ch. 3: Magnetometer Z Axis ± 0.7 gauss = ± 5 volts

Ch. 4: Acceleromter Single Axis "Z" Axis 1g = ± 5 volts

Ch. 5: Accelerometer Biaxial "A" Axis 1g = ± 5 volts

Ch. 6: Accelerometer Biaxial "B" Axis 1g = ± 5 volts

Ch. 7: Temperature 0°C + 50°C = 0 to +5 volts

Ch. 8: Reference Voltage + 2.45 volts

Ch. 9: Negative Battery Voltage Monitor -2.85 volts nominal

Ch. 10: Positive Battery Voltage Monitor -2.85 volts nominal

Transducers:

1) "Z" Axis Accelerometer:

Manufacturer: Sunstrand Data Control
Model: QA 116-15

Range (Full Scale)	±15/g
Sensitivity (Nominal)	250 mV/g
Output Resistance (Nominal)	250 ohms
Frequency Response (Nominal, ±5%)	DC to 500Hz
Natural Response (Nominal)	100Hz
Noise (Nominal): 0 to 10Hz	100 μV rms
0 to 500 Hz	300 μV rms
500 to 10Hz	600 μV rms
Broadband	1 mV rms
Excitation Voltage	±15 VDC ±10%
Excitation Current	17 mA quiescent, 35 mA full scale
Sensitivity Shift with Excitation Voltage	0.005%/V
Zero Shift with Excitation Voltage	50 μg/V
Resolution (DC)	0.000001 g
Threshold (DC)	0.000001 g
Linearity (DC)	0.03% of reading
Hysteresis (Less Than)	0.001% of full scale
Repeatability	0.003% of full scale
Zero Unbalance (Less Than)	±0.02 g
Damping Ratio (Approx) (3)	0.6
Thermal Zero Shift (Max)	0.0002 f/°F
Thermal Sensitivity Shift (Max)	0.01%/°F
Transverse Sensitivity	0.002 g/g

2) X and Y Axis Accelerometer

Manufacturer: Terra Technology
Model: MP-200A

Range: ±1 g (minimum)
Scale Factor: 8.5 VDC/g ±0.5%
Null Offset: <0.020 volts
Temperature Coefficient: 0.01% of FS/°F (Max)
Lineraity: ±0.02% of Full Scale
Hysteresis and Resolution: 0.0001% of Full Scale
Turn-on to turn-on Repeatability: <2mv
(no tapping allowed)
Axis Alignment (WRT Case): ±0.50°
Biaxial Orthagonality: ±0.25°
Output Impedance: <15,000 ohms
"A" Axis to be aligned to 8-32 Hole within 0.5°
Excitation Voltage: ±10 to ±15V
Excitation Current: ±24

3) Tri Axis Magnetometer

Manufacturer: EMCO
The Electro Mechanics Company
Model: 6713

Range: ±0.7 Gauss
Scale Factor: .14 Gauss/volt (±5V)
Resolutions: ±0.5°
Excitation Voltage: ±13 to ±18 VDC
Excitation Current: 60ma max
Voltage Ripple: ±5%

Batteries:

Manufacturer: Gould Inc.
Model: 2.2SC (1/2D) NiCad
Quanity: 24

APPENDIX C

Cableless Survey System Test Plan And Test Results

This Appendix C contains the test plan submitted to the USBM in September 1978. Immediatly following the plan is the results of the system test and description of any deviations which were noted.

TEST PLAN FOR CABLELESS SURVEY SYSTEM

1. DESIGN REQUIREMENTS

A. Check to verify that the following are displayed:

YES	NO	
___	✓	• Bearing in degrees and minutes
___	✓	• Inclination in degrees and minutes
✓	___	• Rotation Angle in degrees
✓	___	• Horizontal deviation in feet
✓	___	• Vertical deviation in feet
✓	___	• Drill string depth

B. Verify that the following can be entered from the keyboard:

YES	NO	
✓	___	• Magnetic dip angle
✓	___	• Initial bearing
✓	___	• Number of drill rods

C. Verify that hard copy can be produced from data received from the downhole unit.

YES	NO
✓	___

D. Verify that self-checking can be performed on the:

YES	NO	
✓	___	• Receiver
✓	___	• Computational circuitry

E. Verify that data error detection and warning capability is functioning

YES	NO
✓	

F. Verify the following physical requirements:

YES	NO	
✓		• Weight, approx. 40 lbs.
		• Size Width 13-3/4 inches Height 14-1/4 inches Depth 11/7/16 inches
✓		• Unit's own carrying case with Protective cover Handle
	✓	• Does handle serve as means to position and display at various viewing angles?
✓		• Is transit case supplied?

G. Is the unit intrinsically safe as defined in MESA Schedule 2G ?

YES	NO	
✓		• Does the system operate from an external 12-volt automobile battery?

H. Is the electronic construction of modular design to allow rapid rapair?

YES	NO
✓	

2. RECEIVER TESTS

Equipment necessary for this test will include a down-hole transmitter link emulator. This emulator will generate lock and transmit signals in strict accordance with those transmitted by the down-hole package at a carrier frequency of 4.0525 KH ±.02%. The data field will be missing, however. It will also contain a white noise generator and a means to sum the two outputs. The signal should have a range of -30μv to 3v (100 dB) in 10 dB steps an- the output noise levels should be adjustable to -3 dB below the signal. If a signal is properly received and decoded, the computer will detect the preamble and generate a "data error" signal because of the absence of the data field.

Procedure

1. With a full battery charge, turn the unit on and verify proper operation with Self-Test function.

2. Connect the emulator to the receiver input and begin the tests with a signal level of 30μv and a noise level of -3 dB, at a carrier center frequency of 4052.5 Hz. Send the preamble five times and note presence or absence of data error indication.

3. Repeat Step 2 nine more times, each time increasing signal and noise levels +10 dB.

4. Repeat Steps 2 and 3 for 4052 Hz and 4053.5 carrier center frequencies.

5. Measure receiver battery voltage and note elapsed test time.

NOTE: If at any time there is a low battery voltage indication in the computer section, stop the test and recharge those batteries.

Record

1. Any conditions under which an error is not detected. If any preambles are sent (under allowable conditions) that do not cause data error indications, the receiver problem must be corrected and the tests run again from Step 1.

2. Results of Step 5.

3. BATTERY LIFE TESTS

The purpose of this test is to determine whether the unit will operate for six hours continuously, given a reasonable set of operating conditions.

Procedure

1. Charge the batteries normally, and measure the resultant battery voltage.

2. Apply the proper preamble from the emulator to the receiver every 15 minutes and check for data error indication. Every hour, operate the self test function and then measure battery voltage.

3. After six continuous hours, continue the test, measuring battery voltage every 15 minutes until that voltage indicates a cell voltage of 1.1v, or until a malfunction occurs.

Record

1. Results of Step 3 versus time of day.

2. Results of Step 4 versus time of day, and condition of battery voltage indicators.

Preface

"The unit" will refer to the processing and display system.

4. ENVIRONMENTAL TESTS

4.1 IMMERSION

The purpose of this test is to prove compliance with Mil-Std-810C Method 512, Procedure 1.

Procedure

1. Obtain a clean vessel with a cross section large enough to accept the unit and a total height of 48", and fill with water at 18° ±5°C to within 10" of the top.

2. Remove all internal components from the unit that are not secured with external fasteners.

3. Heat the unit, cover open, in a temperature chamber, for two hours at 45° ±3°C.

4. Open and close the cover three times, then secure it with the built in latches.

5. Submerge the unit, as modified in Step 2, to the bottom of the vessel, using a method that will restrain the buoyancy of about 100 lbs. wihtout damage to any part of the unit.

6. After 120 ±5 minutes, remove the unit from the water and wipe the exterior surfaces dry.

7. Open the unit and inspect the interior and contents for evidence of leakage.

Record

1. Location and approximate amount of interior moisture observed in Step 7.

4.2 SHOCK TESTS

The purpose of this test is to prove compliance with Mil-Std-810C, Method 516.1, Procedure II, Transit Drop Test.

Procedure

1. Provide a test bed of 2" plywood, with greater cross section than the unit's transit case, on a concrete base.

2. Place the unit in its transit case and secure properly all closures.

3. From a height of 48" above the plywood surface, drop the case on each face, edge, and corner for a total of 26 drops.

4. Run the unit through all initial tests (Steps 1 and 4 of Receiver Testing).

Record

1. Results of Step 4.

2. Any observable physical changes in the transit case, foam packing, or the unit itself.

4.3 OPERATING TEMPERATURE TESTS

The purpose of this test is to verify operation of the unit over the specified range of 0°C to 50°C.

Procedure

1. The unit will be turned on and the specified warm up time allowed to elapse. Test conditions will be entered into the processor on the keyboard.

2. The unit will be placed in a chamber with a viewing port in the front, of sufficient size to view the display, and with a means to allow signal lines from the normal receiver input to be led out of the chamber.

3. Connect the emulator to the receiver input with an input level of 300μv and a noise level -6 dB and a carrier frequency of 4052.5 Hz.

4. Send preamble and record presence or absence of data error indication. NOTE: Presence of data error verifies proper decoding of preamble.

5. Repeat Steps 3 and 4 at carrier frequencies of 4053 Hz and 4053.5 Hz.

6. Temperature of the chamber will be lowered to 0°C and allowed to stabilize for one hour.

7. Repeat Steps 3-5.

8. The temperature of the chamber will be raised to +50°C and the unit allowed to stabilize for one hour.

9. Repeat Steps 3-5.

Record

1. Operating conditions and results of each Step 4 test.

4.4 TEMPERATURE SHOCK TEST

The purpose of this test is to prove compliance with Mil-Std-202E, Method 107D,A, as modified to protect certain components and conserve testing time. Specifically, the liquid crystal display and the batteries are not specified to withstand the high temperature extreme of 80°C. The display, the batteries, the DC/DC converters, the keyboard, and the printer will not withstand the low temperature extreme of -55°C. The batteries, converters, and display are not easily removed. The display has the narrowest range, namely -20°C to +70°C, so we are modifying this thermal shock test to be performed over that range.

Procedure

1. The unit, with cover closed, will be placed in a temperature chamber cooled to -20°C for four hours, with no more than five minutes elapsed if it is being cooled from the high temperature.

2. The unit is then heated to +70°C, with no more than five minutes in the transition from -20°C, where it will remain for four hours.

3. Steps 1 and 2 are each performed a total of five times in sequence.

4. At room temperature, turn the unit on, allow time to warm up, then perform the Receiver Test Section, Steps 1 and 5.

NOTE: If the unit weight is below 30 lbs., times at temperature extremes may be reduced to two hours each.

Record

1. Results of Step 5.

2. Any physical changes evident on post test inspection.

4.5 HUMIDITY TEST

The purpose of this test is to prove compliance of the unit with Mil-Std-810C, Method 507.1, Procedure I, as modified by ENSCO to conserve costs.

Procedure

1. Full charge the unit batteries, remove the protective cover, and connect a dummy connector to the receiver input. Install the connector caps for the power and computer connectors.

2. Place the unit in the temperature chamber and slowly raise the temperature and humidity over a period of two hours to 65°C and 92% r.h., respectively.

3. Maintain the condition of Step 2 for six hours.

4. Open the test chamber and allow it to stabilize at room temperature.

5. Operate the self-test and note proper response.

Record

1. Results of Step 5.

2. Any physical changes noted in the unit.

5. FIELD SURVEY TEST

This test will demonstrate the integrity of the system as a whole. Several compass points and package inclinations will be surveyed and compared with coincident transit readings. Transit accuracies will be kept to ±.01°.

Procedure

5.1 INITIAL MEASUREMENTS

1. Assemble the cableless survey tool with all batteries at full charge.

2. Run Self-Test.

3. Position and level the tool at due magnetic north (0°) and trigger the package.

4. Check the axis alignment offset constants and monitor housekeeping data from the down-hole package.

5. Initiate dip calculation on computer. NOTE: In the following steps, use the external control panel of the computer to read out sensor readings for each point desired.

6. Align the package with an elevation of -1°, and a heading of 0°, and take readings for the following package rotations: 0°, 45°, 90°, 135°, 180°, 225°, 270°, and 315°. Use a transit at each point for a reference reading.

7. Repeat Step 6 for an elevation of 0°.

8. Repeat Step 6 for an elevation of +1°.

9. Repeat Steps 6, 7, and 8 at a heading of 90°.

5.2 SIMULATED DRILLING TRAJECTORY TEST

10. Align the package to 0° heading. Perform 10 random alignments within the range of 359° to 1° (heading) and -1° to 1° (elevation) to simulate the drilling operation. Each point will be entered into the processor as though it were 10' of drill rod from the previous point. Take transit readings of each point for reference.

11. Repeat Step 10, but within the heading range of 269° to 271°.

12. Calculate the simulated course from the transit readings. Then compare with the survey tool results.

Record

1. Results of Steps 2, 4, and 5.

2. Sensor readouts and corresponding transit reading for each of the 24 points in Steps 6, 7, 8, and 9.

3. Results of Steps 10 and 11.

4. Deviations from actual course derived in Step 12.

5.3 DRILLING TESTS

This test will insure that the cableless survey tool operates to design specifications in the actual drilling environment.

Procedure

Initial Measurements

1. Complete assembly of cableless survey tool, with all batteries fully charged, at the surface site of the chosen drilling location.

2. Initiate Self-Test.

3. Trigger the package transmission and determine the mechanical offset of the assembled package.

4. Determine local dip angle, using the computer.

Installation in the Mine

5. Set up the driller console (processing and display subsystem) in the mine. Be certain that connector caps are installed on power and computer connectors.

6. Enter initializing data.

7. Install receiver transducer.

8. Initiate Self-Test.

Initial Survey

9. Perform a Sperry-Sun Multi-Shot survey of the existing portion of the hole.

10. Survey the existing hole with the cableless survey tool. At each 10-foot measurement, stop the drill and trigger a transmission. Then rotate the package 180° ±10° and trigger another transmission.

11. Compare the results of Steps 9 and 10.

Drill and Survey

12. Continue drilling and survey every 10', as in Step 10, to a depth of 1500'.

13. Remove the tool and survey the new hole drilled in Step 12 every 20 feet, using the Sperry-Sun Multi-Shot.

14. Compare the results of Steps 12 and 13.

NOTE: Recharge the batteries and service the printer at the end of each day's operation or sooner if required. Compare daily results with printer output.

Record

1. Results of Step 2.

2. Results of Steps 3 and 4.

3. Results of Step 8.

4. Enter log obtained in Step 9, including house-keeping data from the down-hole package.

5. Parameters of bearing, inclination, angle, horizontal and vertical deviation, drill string depth, and true depth for each point in Step 10.

6. Results of Step 12, as above.

7. Enter log obtained in Step 13.

DEVIATIONS FROM TEST PLAN

1. DESIGN REQUIREMENTS

1.A Bearing and inclination angles are displayed as decimal degrees - example: Bearing + 69.28° rather than degrees and minutes.

1.B No Deviations

1.C No Deviations

1.D No Deviations

1.E No Deviations

1.F All requirements are met except that handle cannot be used to position unit at various display angles.

1.G The system is designed to be intrinsically safe, although as of this date, the uphole processor has not completed certification by MSHA. The downhole tool's explosion proof housing was retained unaltered and continues to remain certified explosion proof.

1.H No Deviations

2. RECEIVER TEST

Under this contract no downhole emulator was constructed. Internal self test in the receiver/processor were included within the uphole unit. This self test does include a complete simulation of carrier lock, preamble recognition and data verification.

The receiver was tested using the downhole breadboard unit. Signal to noise ratios from 0dB to +6dB was inserted in the input of the receiver with a signal level of 3μv and 30μv. At 30μv no errors occurred above a signal to noise ratio of +2dB. At a signal level of 3μv phase shift which occurred during the auto gain ranging did not always allow adequate

time for the carrier phase lock loop to stabilize thereby prohibiting the preamble from being detected. This problem was corrected by employing wider bandwidth amplifiers in the auto gain ranging section of the receiver. After this correct transmission was received without error with a signal to noise ratio of +3dB.

At 30μv signal level some data was received without error with a signal to noise ratio of 0dB. However, since less than 90% of the transmissions were correct, the false alarm or error detection rate was deemed to high. It should be noted that in more than 90% of the cases when the preamble is recognized all data is transferred without error. Conversley, since the receiver does not indicate a data transmission unless the preamble is recognized, very few bad transmissions are even detected.

3. BATTERY LIFE TEST

The battery life test was performed for six continuous hours, at which time the receiver battery was automatically disconnected due to low voltage (as designed). Four data errors were encountered during that time, but this was due to inadvertently not terminating the receiver input.

4. ENVIRONMENTAL TESTS

4.1 Immersion

No interior moisture was evident.

4.2 Shock Tests

Deleted by Contract Modification.

4.3 Operating Temperature Tests

At 0°C, there was no data errors using the self test, the LCD display was slow but functional, and the printer performed properly. At 50°C, there was no data errors using the self test and all other devices functioned normally.

4.4 Temperature Shock Test

As noted before a downhole survey tool emulator was not produced. Therefore, the self-test function was used. After the cycling and at room temperature, all systems functioned properly with no errors. No physical changes were evident.

4.5 Humidity Test

The proper response was obtained from the self test.

5. FIELD SURVEY TEST

5.1 Initial Measurements

See Figure - Magnetometer output for Y axis and Z axis for rotation about X axis.

See Figure - Accelerometer output for Y axis and Z axis for rotation about X axis.

See Figure - Magnetometer output for Y axis and X axis for rotation about Z axis.

5.2 Simulated Drilling Trajectory Test

The simulated trajectory test was done by placing a pattern of nine holes in a board as shown below:

•2	•3	•4
•9	•1	•5
•8	•7	•6

The coordinate distance between each hole was such that movement between any two adjacent holes vertically or horizontally repositioned the tool by 1° in bearing for horizontal and 1° in inclinations vertically. The simulated survey was performed by entering the initial conditions for hole #1 at an initial

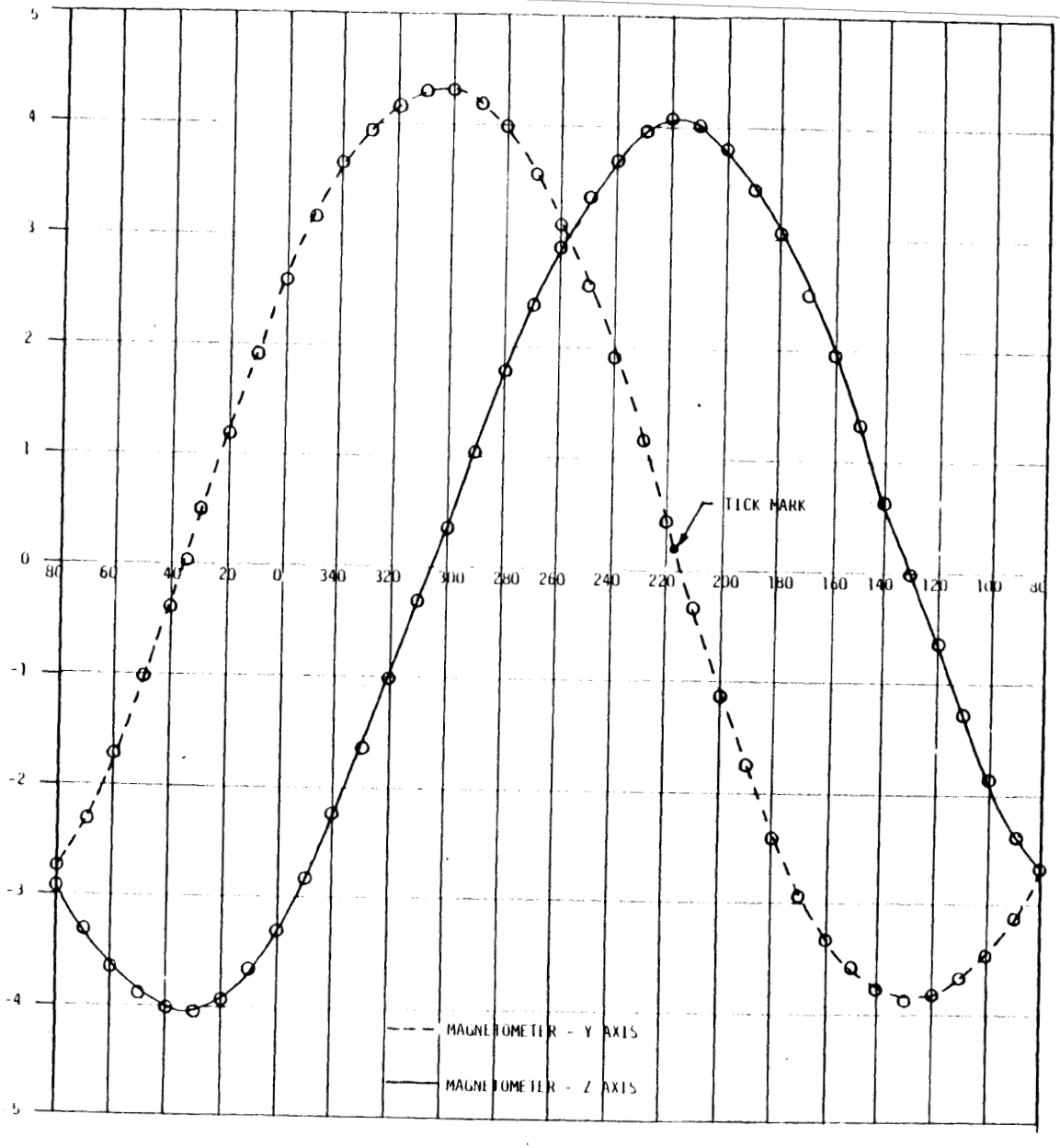

Figure 23. Magnetometer Output for Y Axis and Z Axis

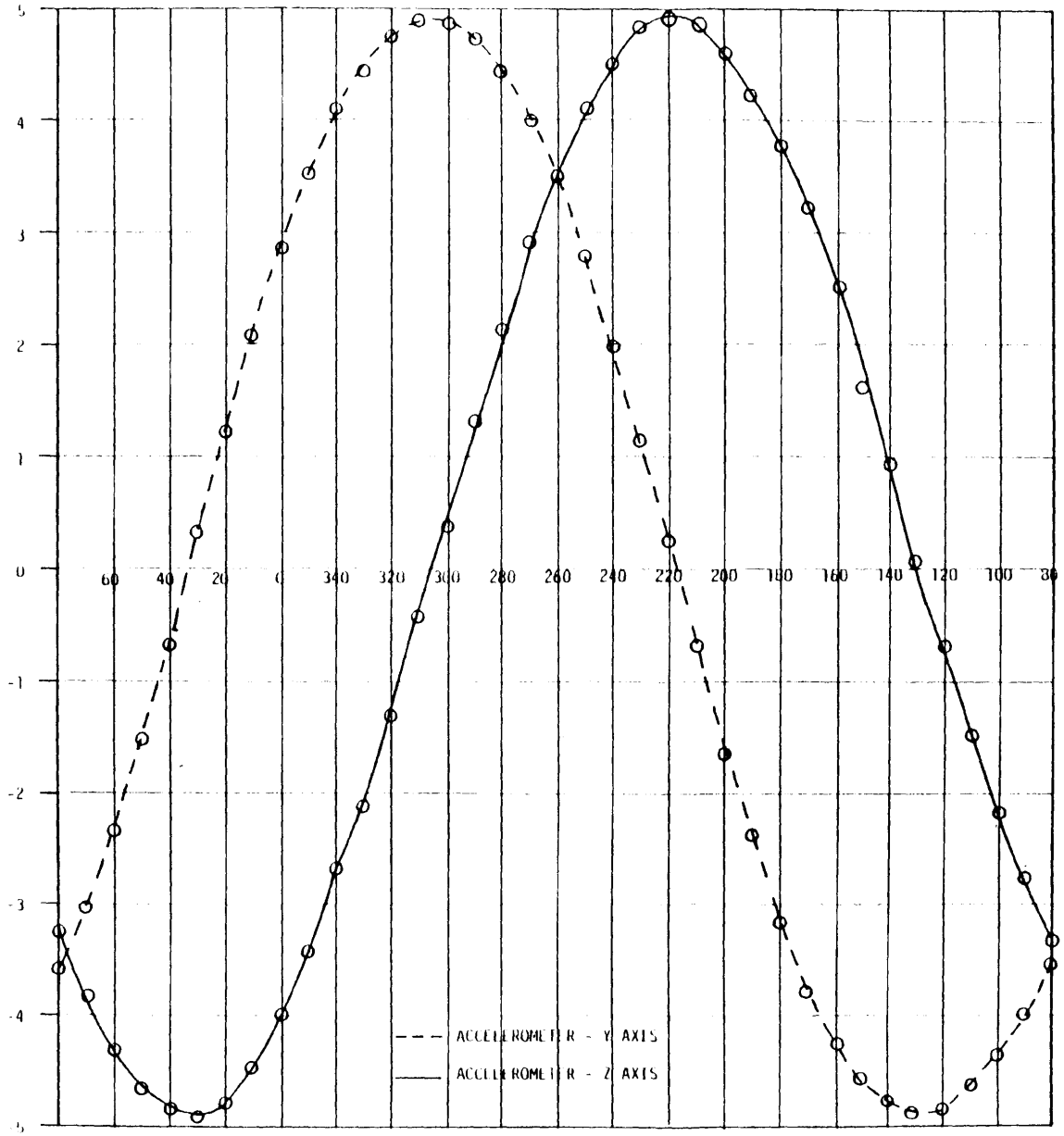

Figure 24. Accelerometer Output for Y Axis and Z Axis for Rotation about X Axis

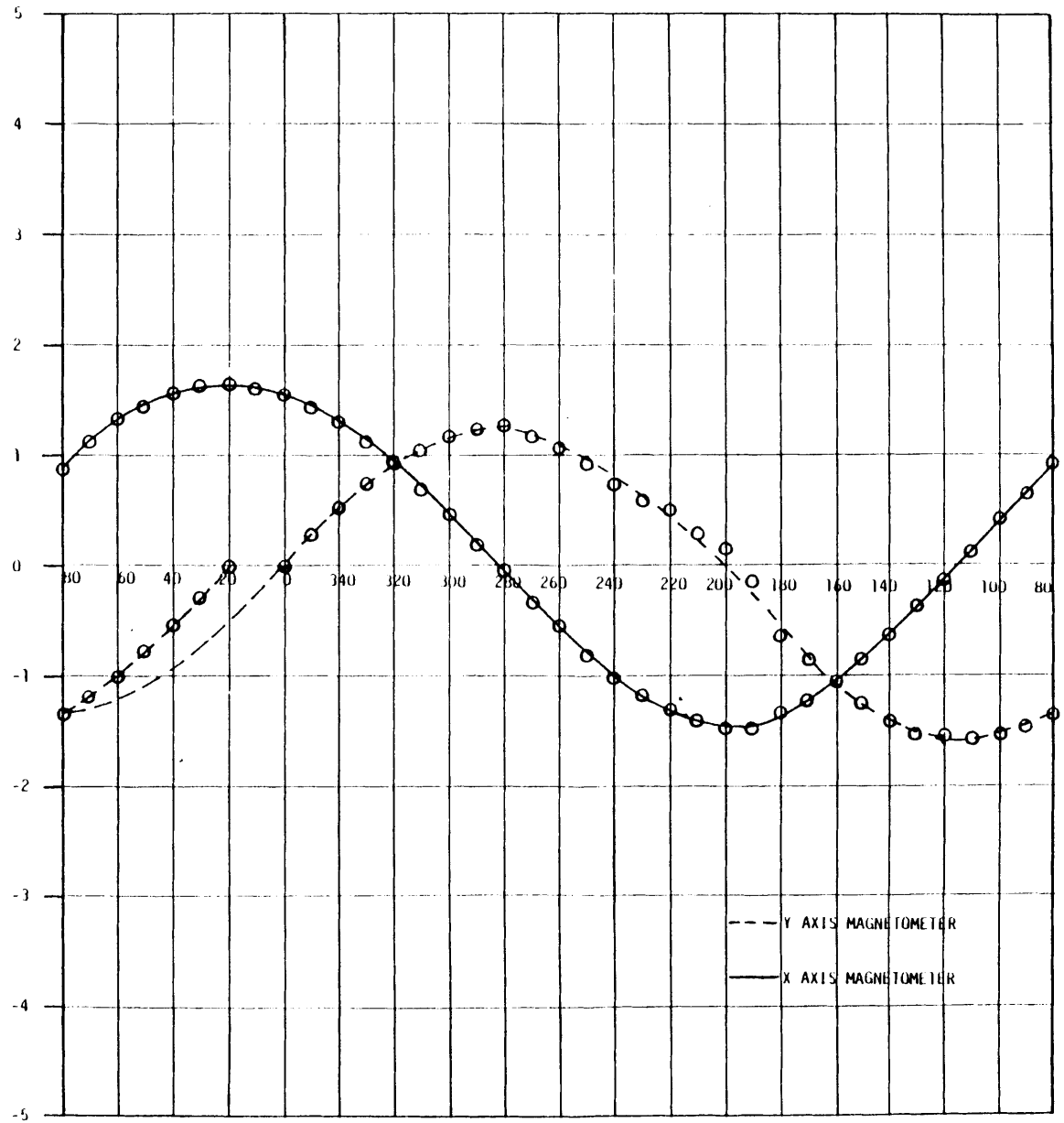

Figure 25. Magnetometer Output for Y Axis and X Axis for Rotation about X Axis

string length of 20 feet. Then a survey of the dirst hole position was done and an assumed 10 foot drill rod added. The tool was then positioned sequentially in each hole and a survey done adding 10 foot rod sections for each hole until hole #1 was repeated. This resulted in a total simulated survey of 120 feet of string length. Figure 26A shows a comparison of calculated bearings versus tool measurements. Figure 26B gives the same comparison for inclination. Figure 26c compares the theoretical survey path to the computer results provided by the cableless survey system.

5.3 Drilling Tests

Drilling tests were performed at the Federal #1 mine in Granttown West Virginia. The following deviations from this test plan are noted.

- The hole depth was terminated at 330 feet due to drilling problems with the drilling equipment and the contact of a ceized drill string located in an adjacent hole.
- No readings were taken with the Sperry Sun Multishot system between 75 and 165 feet.

Figure 27 shows the comparison of vertical deviation as measured by the two systems.

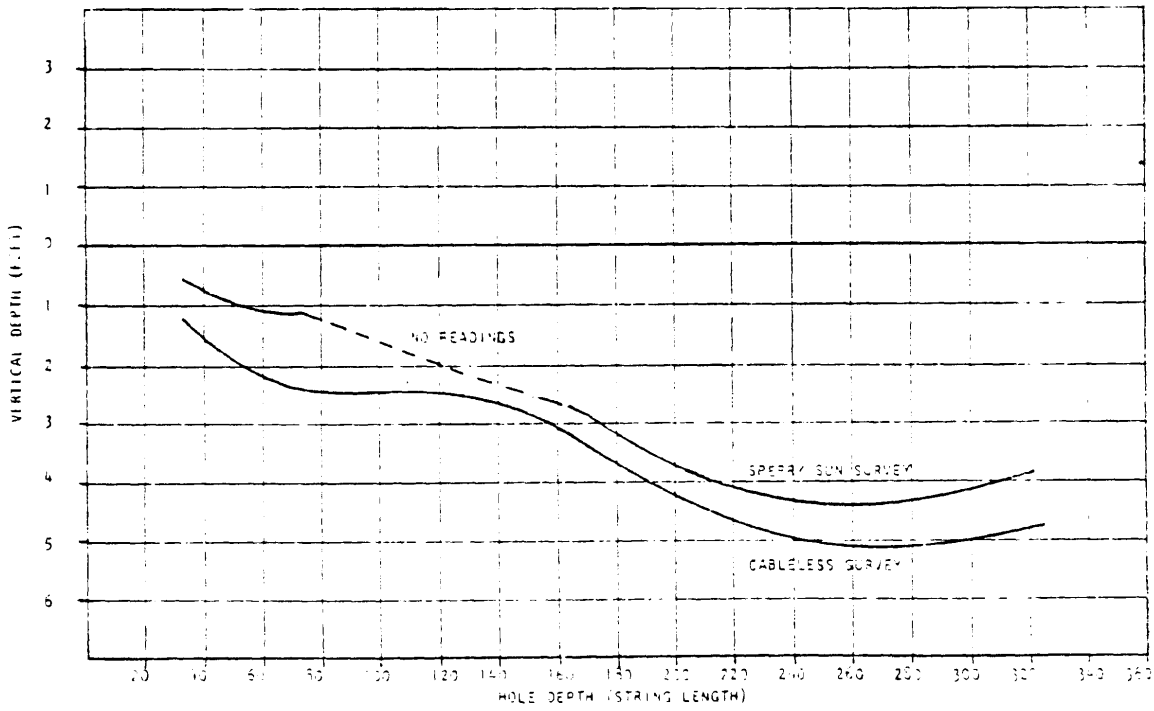

Figure 27 . Vertical Survey of "Horizontal" Drill Hole Using Sperry Sun Survey System and Cableless Electronic Survey System

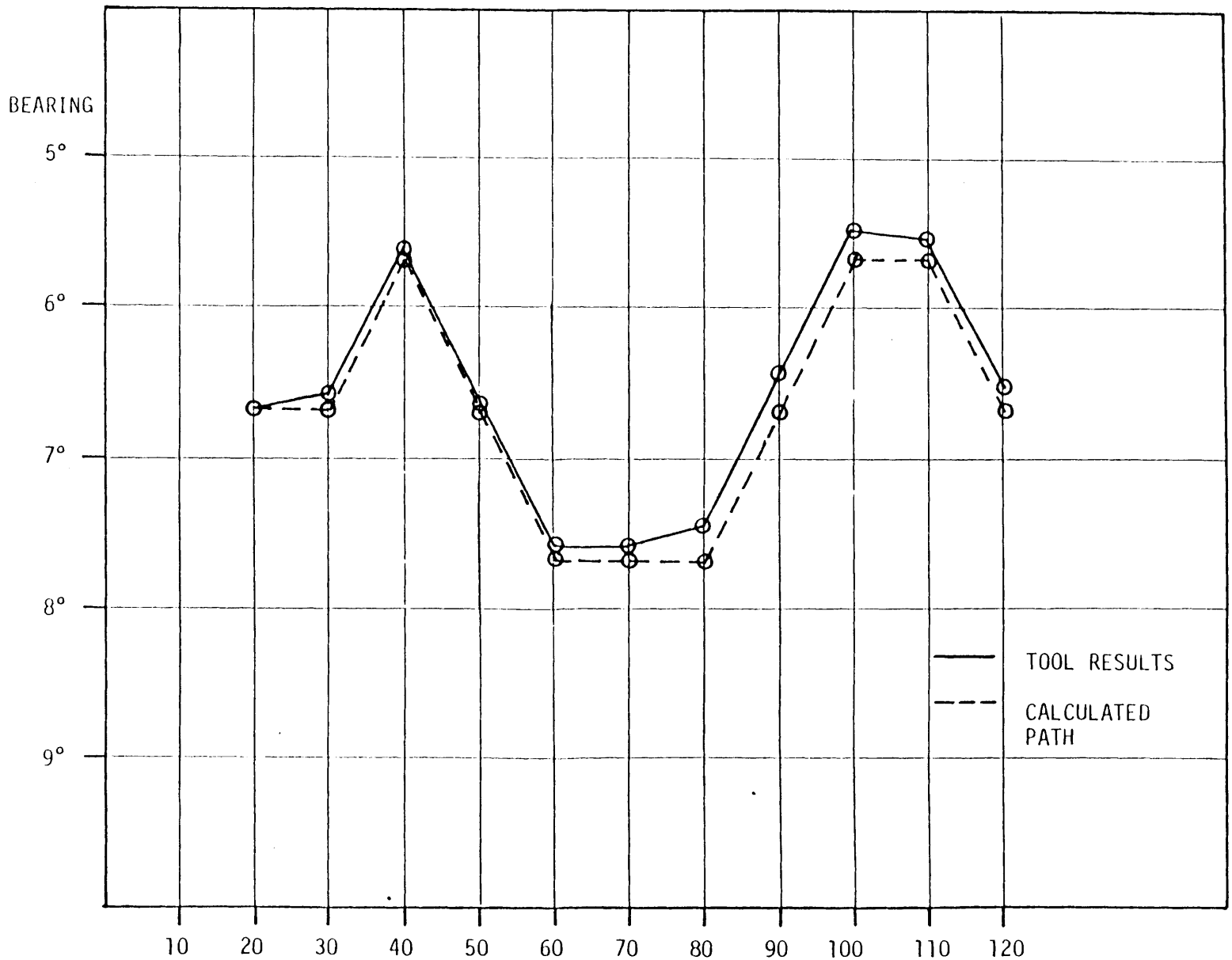

Figure 26a Comparison of Calculated Survey Path vs. Measured Bearings for Simulated Trajectory Test

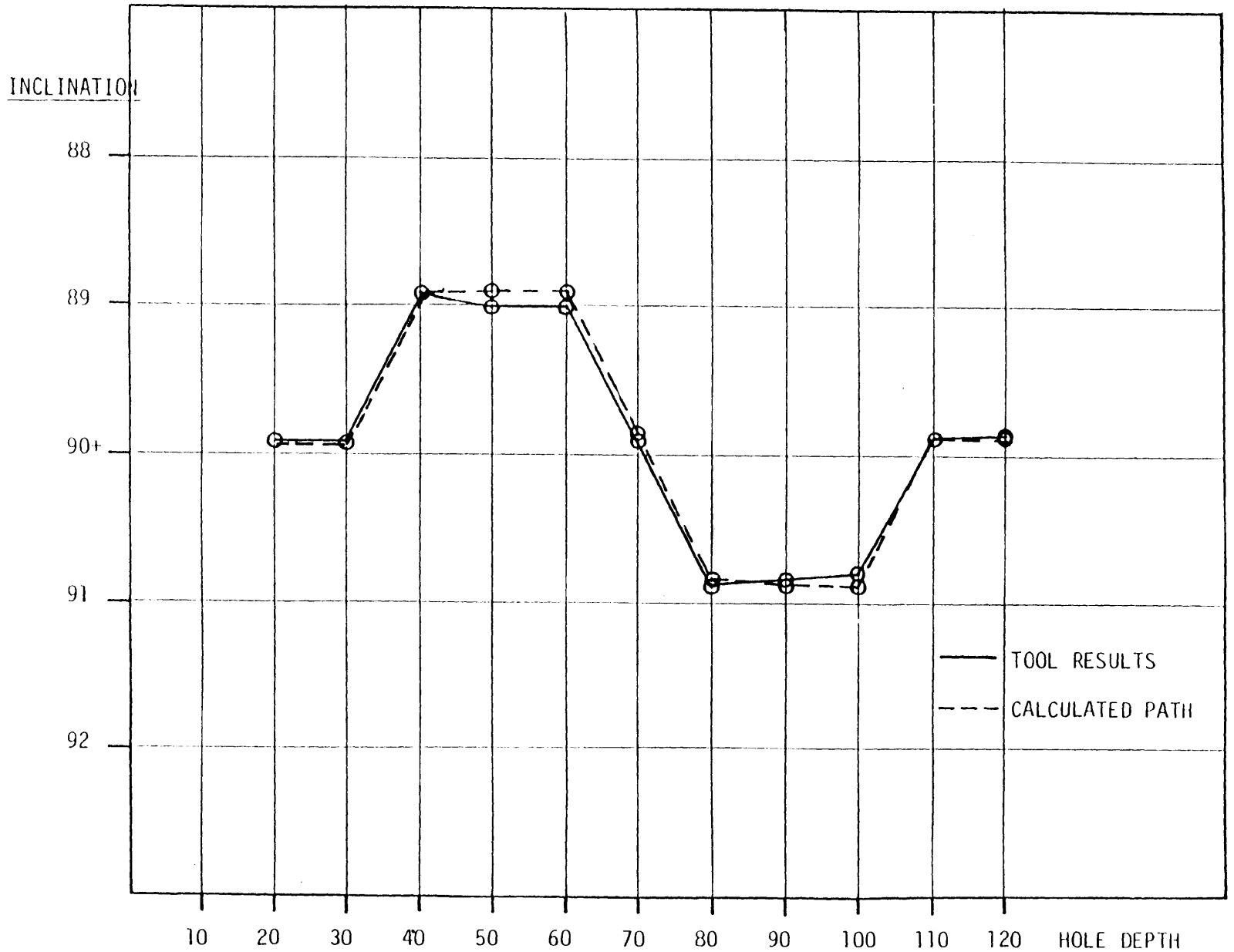

Figure 26b. Comparison of Calculated Survey Path vs. Measured Inclination for Simulated Trajectory Test

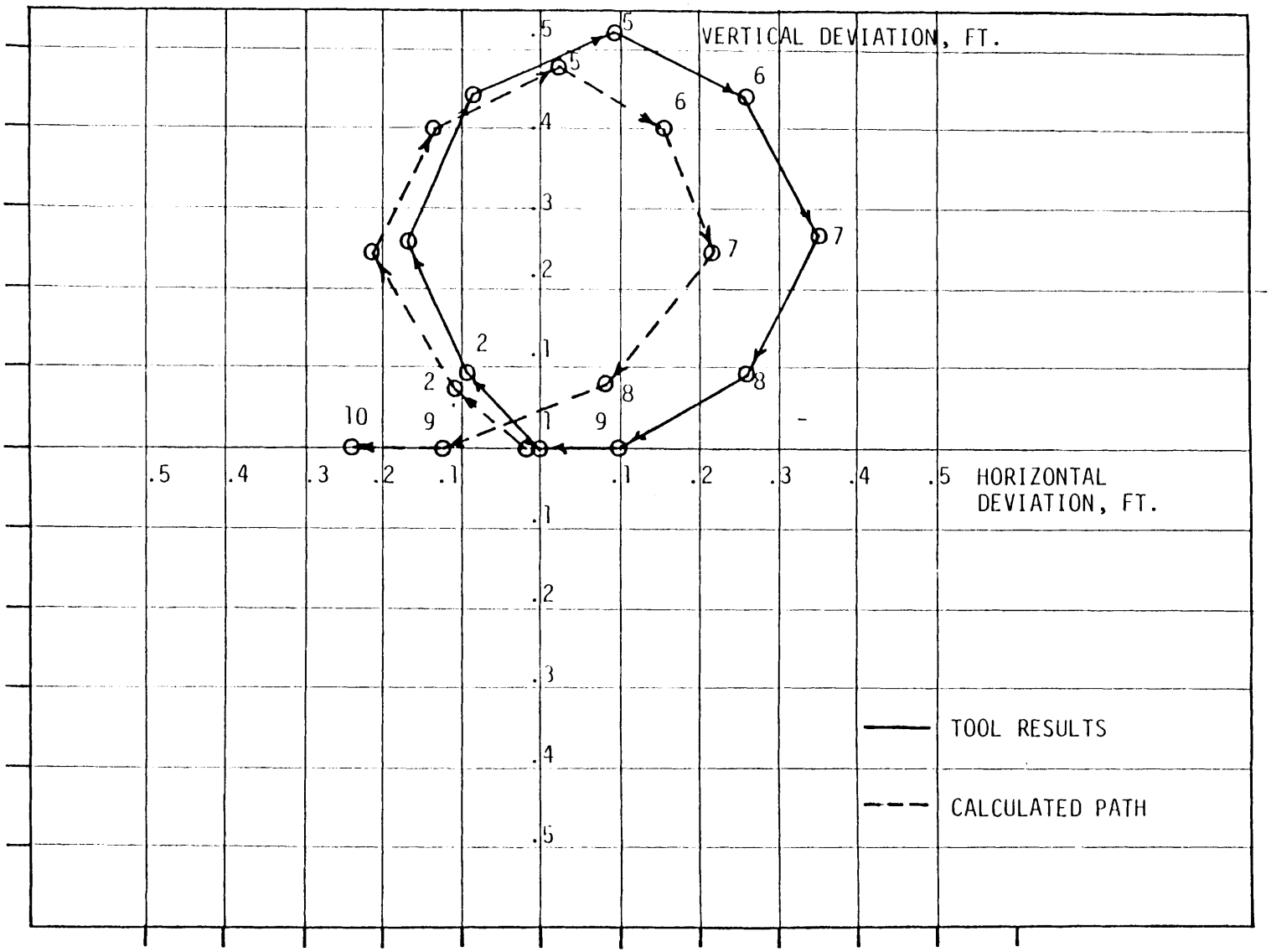

Figure 26c. Comparison of Calculated Survey Path vs. Measured Survey Path for Simulated Trajectory Test.

APPENDIX D

System Schematic Diagrams and Software Listings

CONNECTOR DESIGNATION AND PIN ASSIGNMENTS FOR DOWNHOLE PACKAGE

Sensor Canister/Electronics: J1/P1

Connector: Bendix PT02A-14-18S/P

Pin	Signal
A	Wiper Pressure Switch
B	X Axis Accelerometer
C	Y Axis Accelerometer
D	+12 volts, Z Axis Accelerometer
E	Power Return, Z Axis Accelerometer
F	NC
H	Signal Return, Z Axis Accelerometer
J	+12 volts, X,Y Axis Accelerometer and X,Y,Z, Axis Magnetometer
K	-12 volts, X,Y Axis Accelerometer and X,Y,Z, Axis Magnetometer
L	Power and Signal Retrun, X,Y Axis Accelerometer and X,Y,Z, Axis Magnetometer
M	+12 volts, Pressure Switch
N	Signal Return, Pressure Switch
P	-12 volts, Z Axis Accelerometer
R	Signal Output Y Axis Magnetometer
S	Signal Output X Asis Accelerometer
T	Signal Output X Axis Magnetometer
U	Signal Output Z Axis Magnetometer

Electronics/Battery Pack: P2/J2

Connector: Bendix PT06-10-6- S/P

Pin	Signal
A	Transmit Toriod
B	Return, Transmit Torriod and Case Ground
C	- Battery Voltage
D	± Battery Return
E	+ Battery Voltage
F	NC

Z-Axis Accelerometer: J3

Connector: Sunstrand Date Control CA-116-15-30

Pin	Signal
1	+12 volts
2	Signal Return
3	Signal Output
4	-12 volts
5	Power Return
6	Self Test

X,Y Axis Accelerometer: No Connector

Pin	Signal
1	+12 volts
2	-12 volts
3	Power and Signal Return
4	X Axis Output
5	Y Axis Output

Magnetometer J4

Connector: PT02-C-10-65

Pin	Signal
A	+12 volt
B	Power and Signal Return
C	-12 volt
D	X Axis Output
E	Y Axis Output
F	Z Axis Output

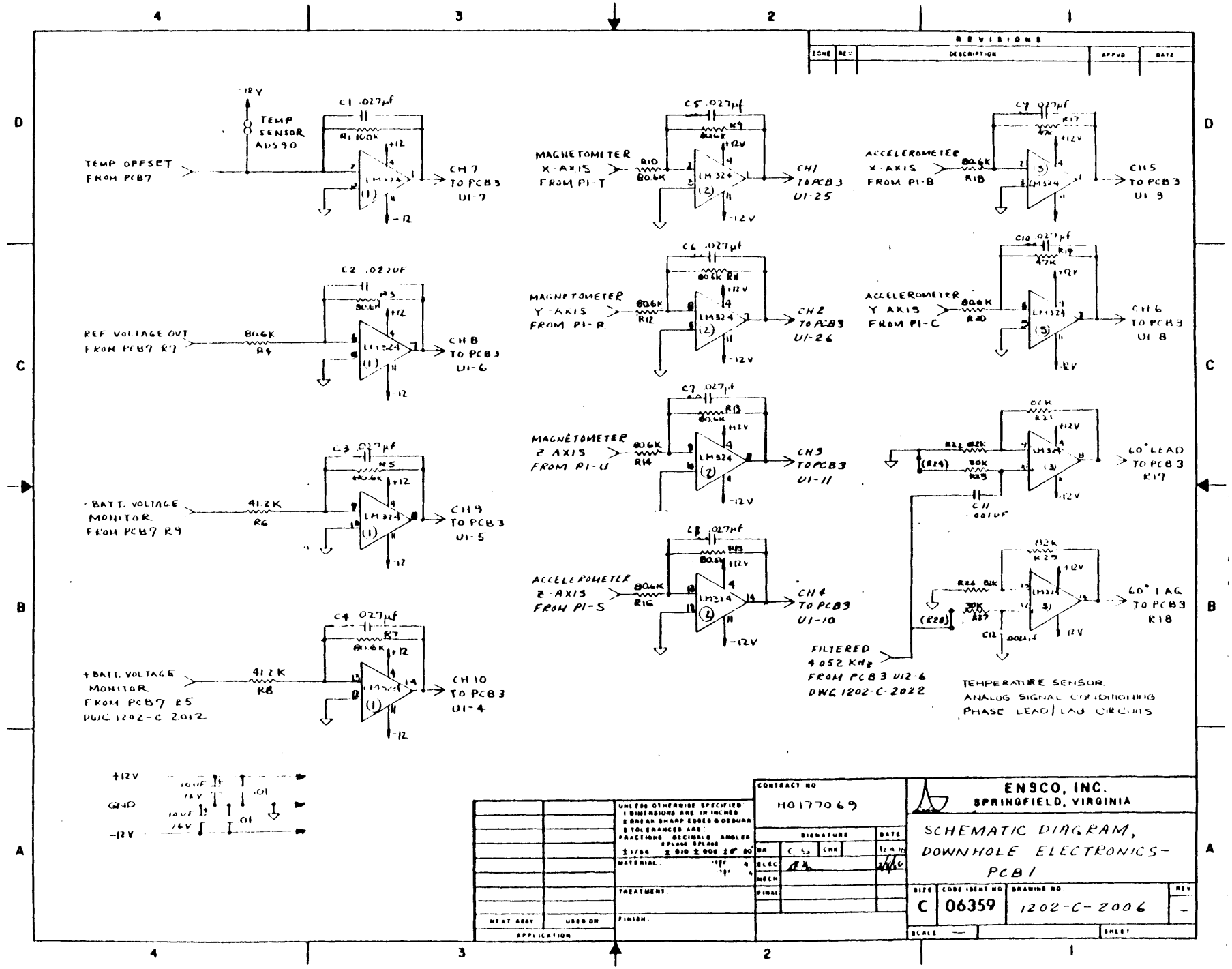
REVISIONS
ZONE REV DESCRIPTION APPVD DATE
-12V
TEMP SENSOR AD590
C1 .027μf
R1 100K
TEMP OFFSET FROM PCB7
CH 7 TO PCB3 U1-7
C2 .027UF
R3 80.6K
REF VOLTAGE OUT FROM PCB7 R7
80.6K R4
CH 8 TO PCB3 U1-6
C3 .027μf
R5 80.6K
-BATT. VOLTAGE MONITOR FROM PCB7 R9
41.2K R6
CH 9 TO PCB3 U1-5
C4 .027μf
R7 80.6K
+BATT. VOLTAGE MONITOR FROM PCB7 R5 DWG 1202-C 2012
41.2K R8
CH 10 TO PCB3 U1-4
C5 .027μf
R9 80.6K
MAGNETOMETER X-AXIS FROM P1-T
R10 80.6K
CH1 TO PCB3 U1-25
C6 .027μf
R11 80.6K
MAGNETOMETER Y-AXIS FROM P1-R
80.6K R12
CH2 TO PCB3 U1-26
C7 .027μf
R13 80.6K
MAGNETOMETER Z AXIS FROM P1-U
80.6K R14
CH3 TO PCB3 U1-11
C8 .027μf
R15 80.6K
ACCELEROMETER Z-AXIS FROM P1-S
80.6K R16
CH4 TO PCB3 U1-10
C9 .027μf
R17 47K
ACCELEROMETER X-AXIS FROM P1-B
80.6K R18
CH5 TO PCB3 U1 9
C10 .027μf
R19 47K
ACCELEROMETER Y AXIS FROM P1-C
80.6K R20
CH6 TO PCB3 U1 8
82K R21
R22 82K
(R24)
30K R23
C11 .001UF
60° LEAD TO PCB3 R17
82K R25
R26 82K
(R28)
30K R27
C12 .001μf
60° LAG TO PCB3 R18
FILTERED 4.052 KHz FROM PCB3 U12-6 DWG 1202-C-2022
TEMPERATURE SENSOR ANALOG SIGNAL CONDITIONING PHASE LEAD/LAG CIRCUITS
+12V
GND
-12V
10UF 16V
.01
UNLESS OTHERWISE SPECIFIED: 1 DIMENSIONS ARE IN INCHES 2 BREAK SHARP EDGES & DEBURR 3 TOLERANCES ARE: FRACTIONS ±1/64 DECIMALS ±.010 ANGLES ±.000 ±0° 30'
MATERIAL:
TREATMENT:
FINISH:
NEXT ASSY USED ON
APPLICATION
CONTRACT NO H0177069
SIGNATURE DATE
DR C.S. CHK
ELEC
MECH
FINAL
ENSCO, INC.
SPRINGFIELD, VIRGINIA
SCHEMATIC DIAGRAM, DOWNHOLE ELECTRONICS-PCB1
SIZE C
CODE IDENT NO 06359
DRAWING NO 1202-C-2006
REV
SCALE —
SHEET

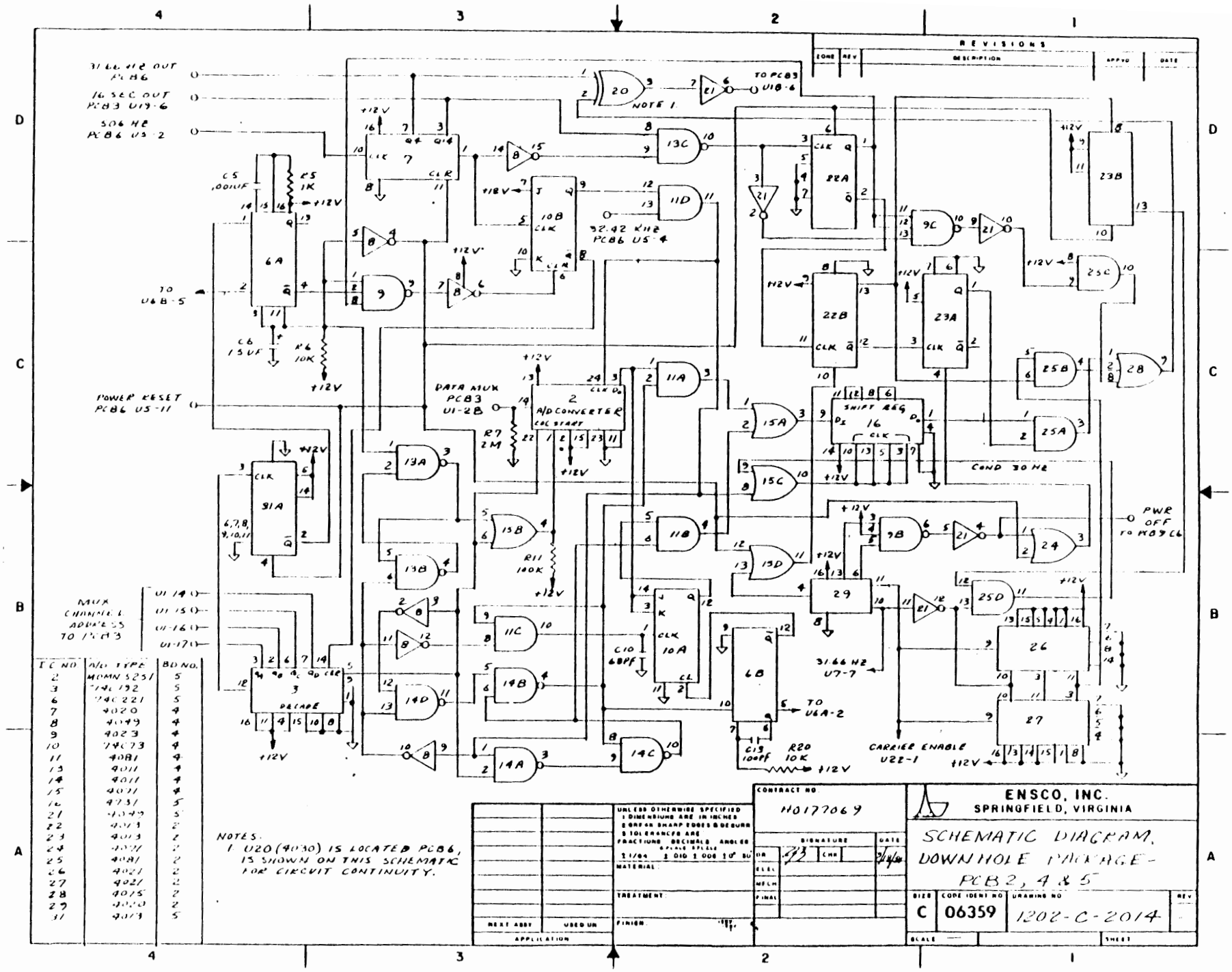

IC NO	A/D TYPE	BD NO.
2	MOMN 5231	5
3	74C192	5
6	74C221	5
7	4020	4
8	4049	4
9	4023	4
10	74C73	4
11	4081	4
13	4011	4
14	4011	4
15	4011	4
16	4731	5
21	4049	5
22	4013	2
23	4013	2
24	4021	2
25	4081	2
26	4021	2
27	4021	2
28	4015	2
29	4020	2
31	4013	5

NOTES:
1 U20 (4030) IS LOCATED PCB6, IS SHOWN ON THIS SCHEMATIC FOR CIRCUIT CONTINUITY.

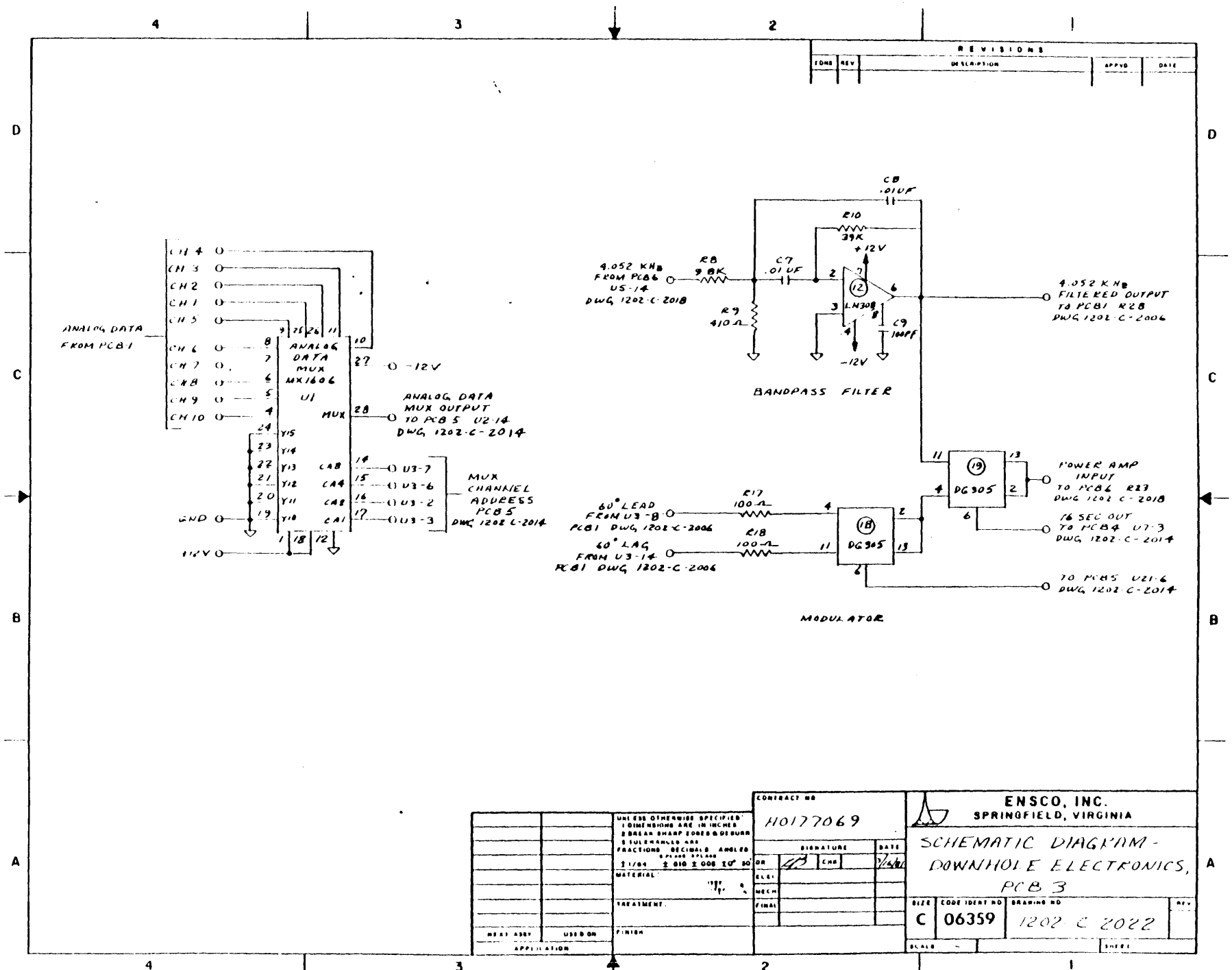
REVISIONS
ZONE
REV
DESCRIPTION
APPVD
DATE
ANALOG DATA FROM PCB 1
CH 4
CH 3
CH 2
CH 1
CH 5
CH 6
CH 7
CH 8
CH 9
CH 10
ANALOG DATA MUX MX1606 U1
-12V
ANALOG DATA MUX OUTPUT TO PCB 5 U2-14 DWG 1202-C-2014
MUX
U3-7
U3-6
U3-2
U3-3
MUX CHANNEL ADDRESS PCB 5 DWG 1202 C-2014
GND
+12V
C8 .01UF
R10 39K
+12V
4.052 KHz FROM PCB6 U5-14 DWG 1202-C-2018
R8 9.8K
C7 .01UF
R9 410Ω
LM308
C9 100PF
-12V
4.052 KHz FILTERED OUTPUT TO PCB1 R28 DWG 1202-C-2006
BANDPASS FILTER
POWER AMP INPUT TO PCB6 R23 DWG 1202 C-2018
DG305
16 SEC OUT TO PCB4 U7-3 DWG 1202-C-2014
60° LEAD FROM U3-8 PCB1 DWG 1202-C-2006
R17 100Ω
R18 100Ω
60° LAG FROM U3-14 PCB1 DWG 1202-C-2006
DG305
TO PCB5 U21-6 DWG 1202-C-2014
MODULATOR
CONTRACT NO
H0177069
UNLESS OTHERWISE SPECIFIED: 1 DIMENSIONS ARE IN INCHES 2 BREAK SHARP EDGES & DEBURR 3 TOLERANCES ARE FRACTIONS DECIMALS ANGLES
MATERIAL
TREATMENT
FINISH
NEXT ASSY
USED ON
APPLICATION
SIGNATURE
DATE
DR
CHK
ELEC
MECH
FINAL
ENSCO, INC.
SPRINGFIELD, VIRGINIA
SCHEMATIC DIAGRAM - DOWNHOLE ELECTRONICS, PCB 3
SIZE
C
CODE IDENT NO
06359
DRAWING NO
1202 C 2022
REV
SCALE
SHEET

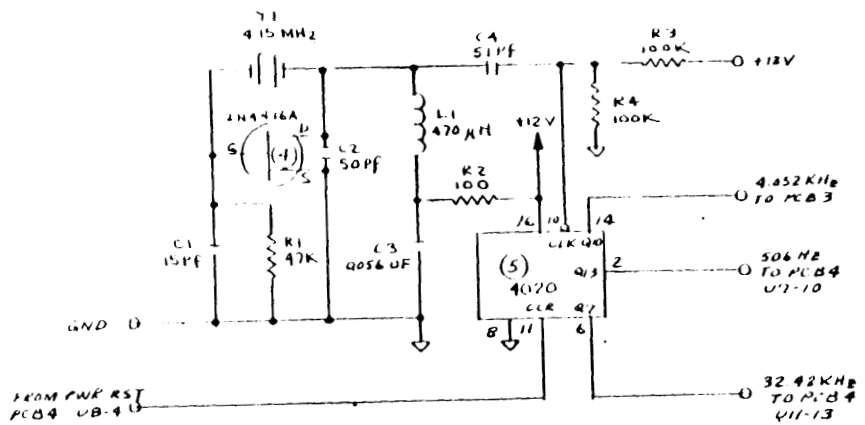

MASTER CLOCK

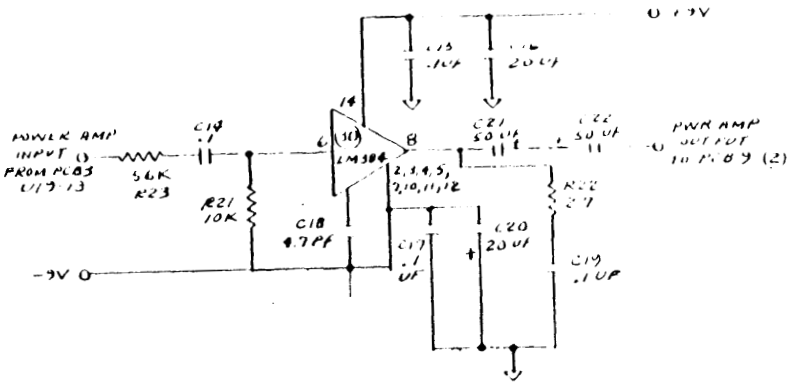

TRANSMITTER

NOTE:
1 INTEGRATED CIRCUIT U20 IS LOCATED ON PCB6, IT IS SHOWN ON SCHEMATIC DIAGRAM 1202-C-2014 FOR CLARITY OF CIRCUIT.

REVISIONS

ZONE	REV	DESCRIPTION	APPROVED	DATE

UNLESS OTHERWISE SPECIFIED
1 DIMENSIONS ARE IN INCHES
2 BREAK SHARP EDGES & DEBURR
3 TOLERANCES ARE
FRACTIONS DECIMALS ANGLES
± 1/64 ± .010 ± .005 ± 0° 30'
MATERIAL
TREATMENT
FINISH
NEXT ASSY | USED ON
APPLICATION

CONTRACT NO H0177069

	SIGNATURE	DATE
DR		
CHK		
ELEC		
MECH		
FINAL		

ENSCO, INC.
SPRINGFIELD, VIRGINIA

SCHEMATIC DIAGRAM-
DOWNHOLE ELECTRONICS,
PCB 6

SIZE	CODE IDENT NO	DRAWING NO	REV
C	06359	1202-C-2018	

SCALE — SHEET

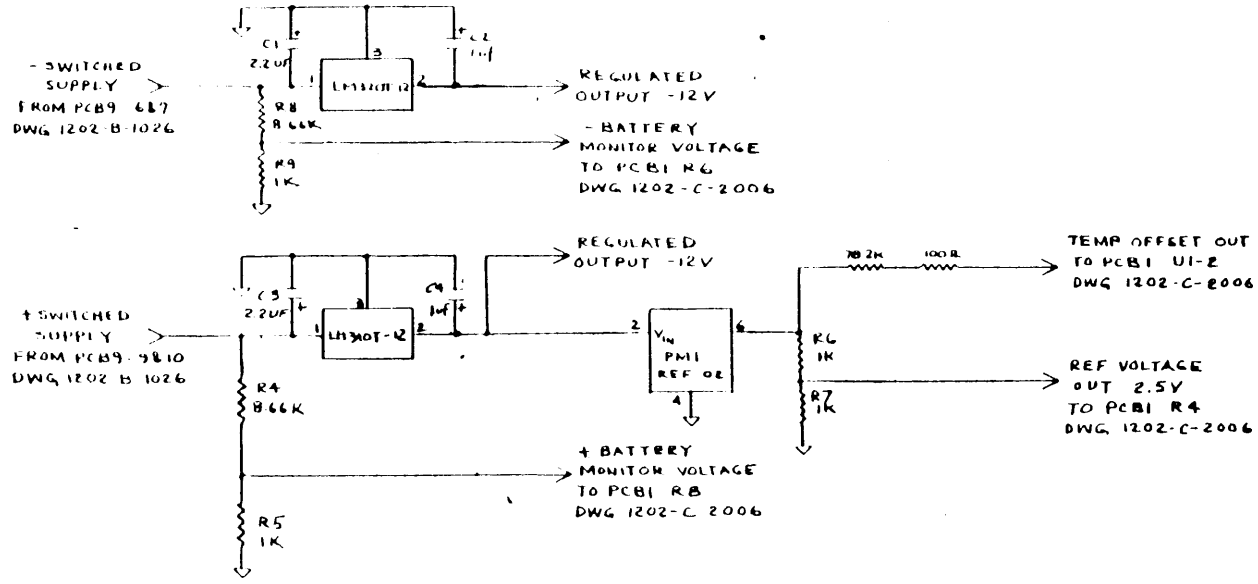

+ 12V REGULATOR
- 12V REGULATOR
REFERENCE VOLTAGE
TEMPERATURE OFFSET

REVISIONS				
ZONE	REV	DESCRIPTION	APPVD	DATE

CONTRACT NO. H0177069

UNLESS OTHERWISE SPECIFIED: 1 DIMENSIONS ARE IN INCHES 2 BREAK SHARP EDGES & DEBURR 3 TOLERANCES ARE FRACTIONS ±1/64 DECIMALS ±.010 ±.005 ANGLES ±0°30'

MATERIAL:

TREATMENT:

FINISH:

NEXT ASSY | USED ON

APPLICATION

	SIGNATURE	DATE
DR	C S	12.8.78
ELEC		
MECH		
FINAL		

CHK

ENSCO, INC.
SPRINGFIELD, VIRGINIA

SCHEMATIC DIAGRAM, DOWNHOLE ELECTRONICS - PCB 7

SIZE	CODE IDENT NO	DRAWING NO	REV
C	06359	1202-C-2012	--

SCALE -- | SHEET

REVISIONS				
ZONE	REV	DESCRIPTION	APPVD	DATE

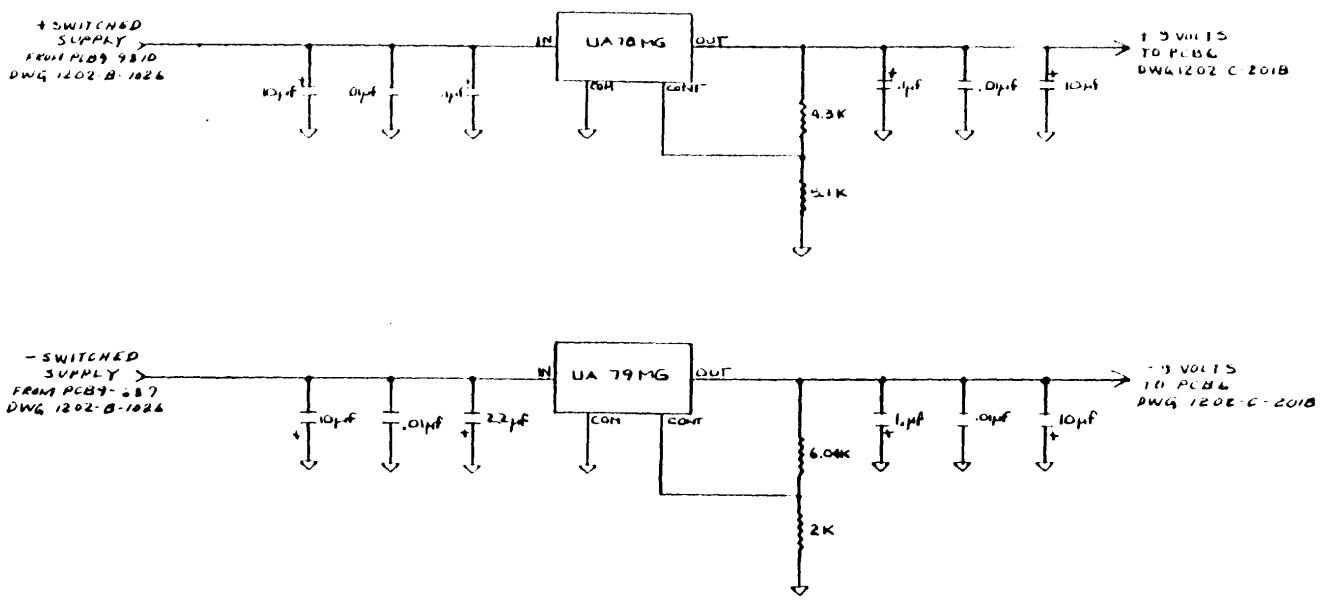

NEXT ASSY	USED ON	UNLESS OTHERWISE SPECIFIED: 1 DIMENSIONS ARE IN INCHES 2 BREAK SHARP EDGES & DEBURR 3 TOLERANCES ARE FRACTIONS ±1/64 DECIMALS ±.010 ANGLES ±1°	CONTRACT NO. W0177069	ENSCO, INC. SPRINGFIELD, VIRGINIA
APPLICATION		MATERIAL:	DR C.S. CHK	SCHEMATIC DIAGRAM, DOWNHOLE ELECTRONICS PCB 8
		TREATMENT:	ENGR	
		FINISH:	MECH	SIZE C · CODE IDENT NO 06359 · DRAWING NO 1202-C-2021 · REV
			FINAL	SCALE — · SHEET

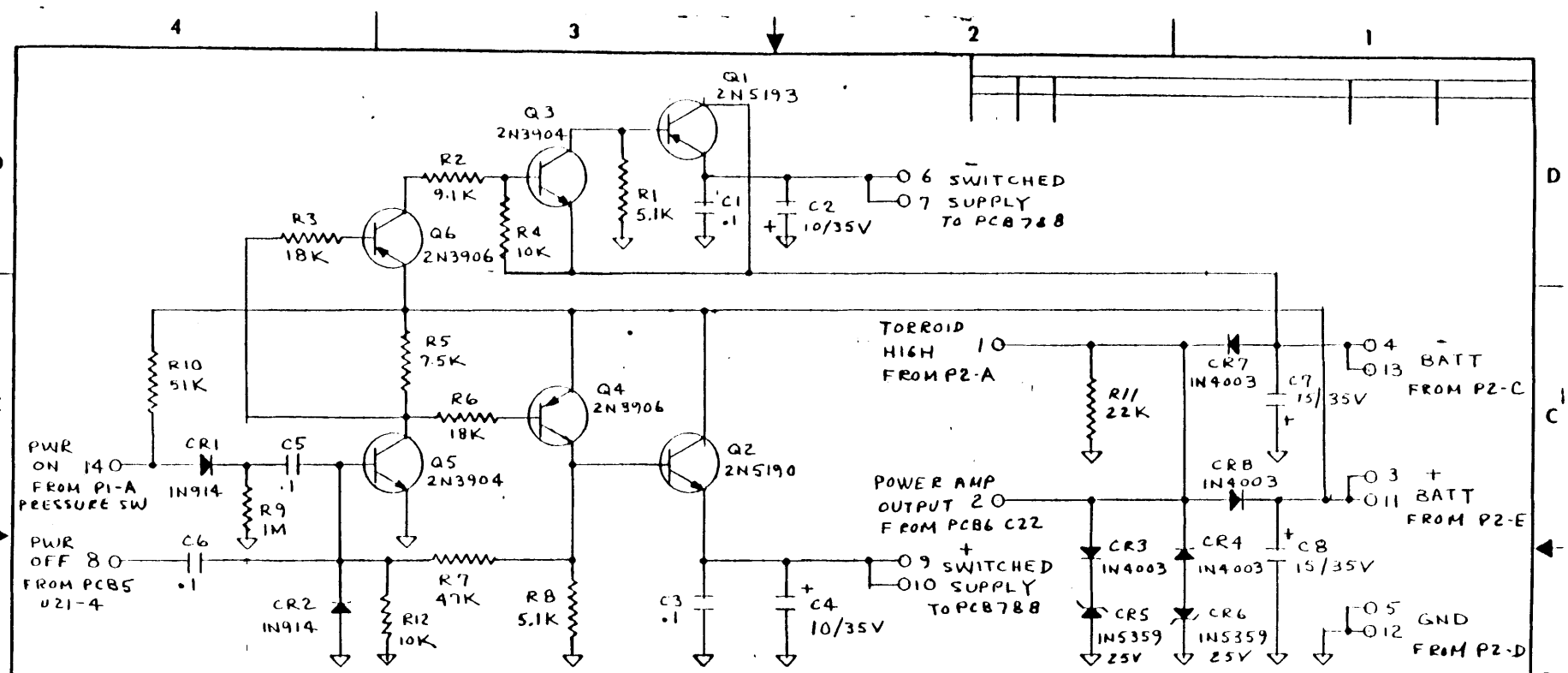

UNLESS SPECIFIED:
ALL RESISTORS ARE
1/4 W ± 5% CARBON

NEXT ASSY	USED ON	APPLICATION

UNLESS OTHERWISE SPECIFIED:
1 DIMENSIONS ARE IN INCHES
2 BREAK SHARP EDGES & DEBURR
3 TOLERANCES ARE:
FRACTIONS ±1/64 DECIMALS 3 PLACE ±.010 2 PLACE ±.008 ANGLES ±0° 30'

MATERIAL:

TREATMENT:

FINISH:

CONTRACT NO. H0177069

	SIGNATURE		DATE
DR	CB	CHK	7/20/80
ELEC	[illegible]		7/21/80
MECH			
FINAL			

ENSCO, INC.
SPRINGFIELD, VIRGINIA

SCHEMATIC DIAGRAM, DOWNHOLE ELECTRONICS - POWER TRIGGER PCB9

SIZE	CODE IDENT NO	DRAWING NO.	REV
B	06359	1202-B-1026	A

SCALE: — SHEET

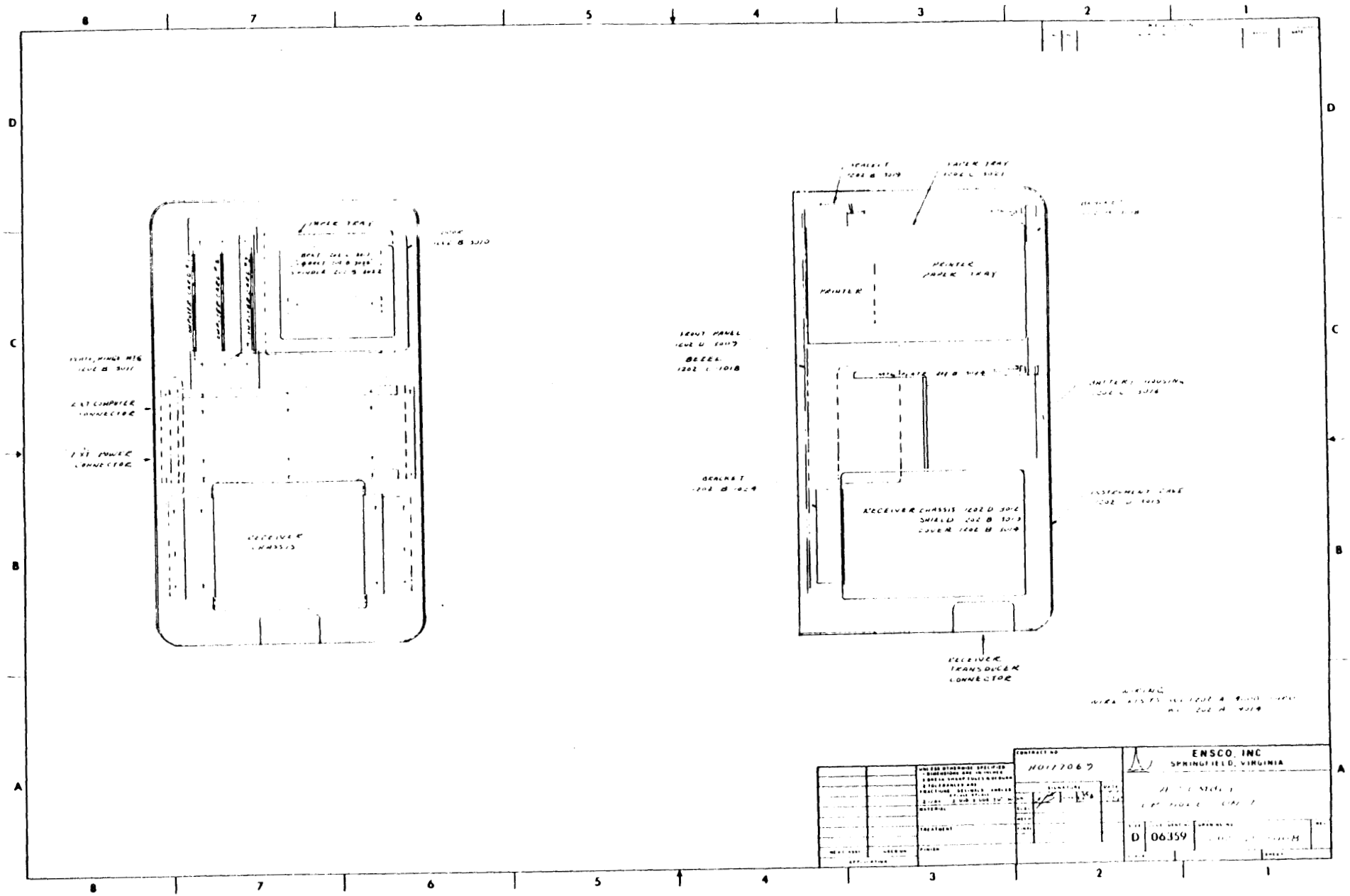
PAPER TRAY
RECEIVER CHASSIS
PRINTER
PRINTER PAPER TRAY
FRONT PANEL
BEZEL
RECEIVER CHASSIS
SHIELD
COVER
RECEIVER TRANSDUCER CONNECTOR
ENSCO, INC
SPRINGFIELD, VIRGINIA
D
06359

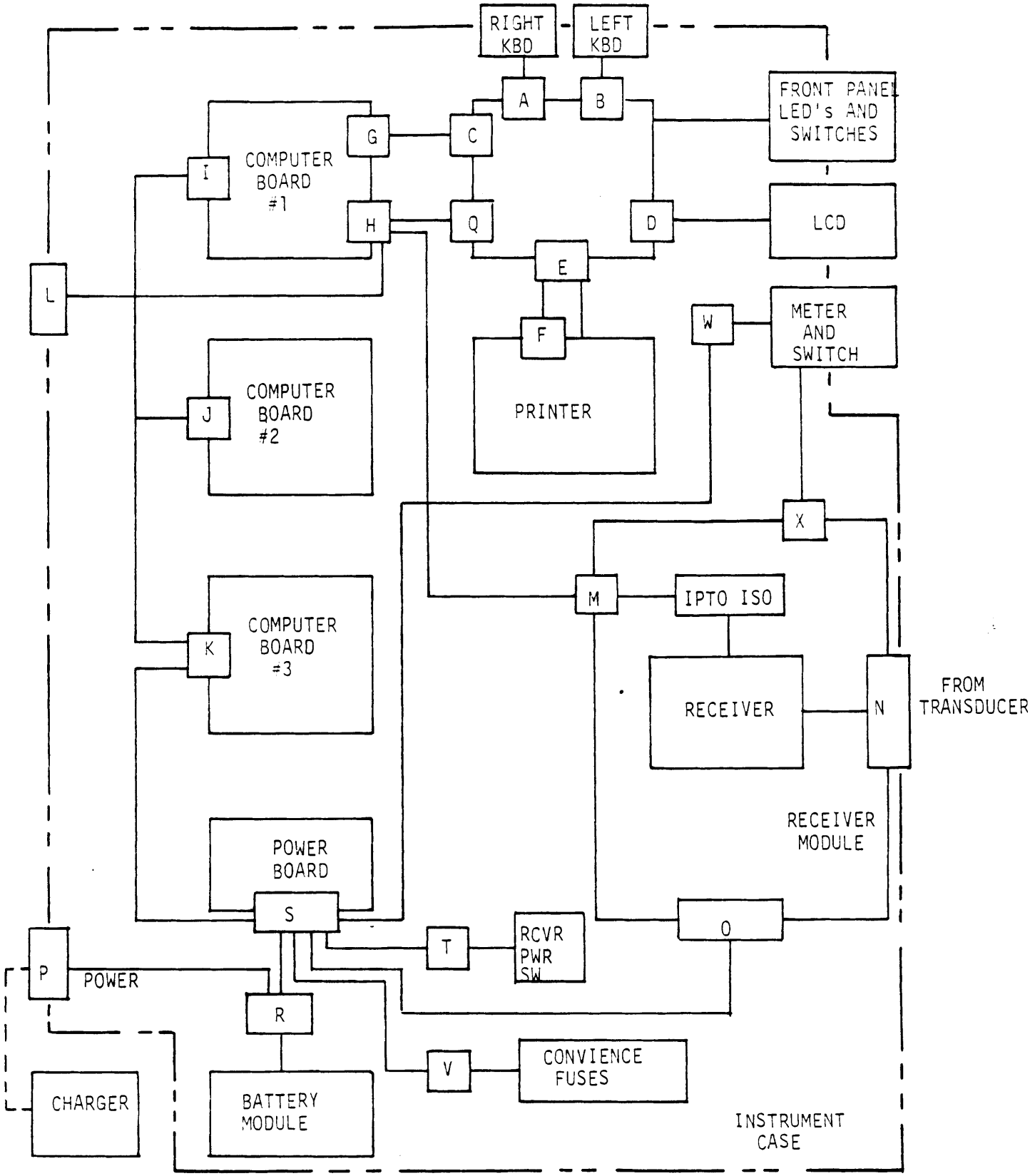

Processing and Display Subsystem Interconnection Diagram

CONNECTOR DESIGNATIONS AND PIN ASSIGNMENTS
FOR UPHOLE RECEIVER/PROCESSOR PACKAGE

Right Keyboard to Front Panel PCB: JA
Left Keyboard to Front Panel PCB: JB

Connector: Burndy 8 Pin

Pin	Signal
1	R1
2	C2
3	C3
4	C4
5	R2
6	R3
7	R4
8	C1

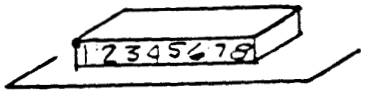

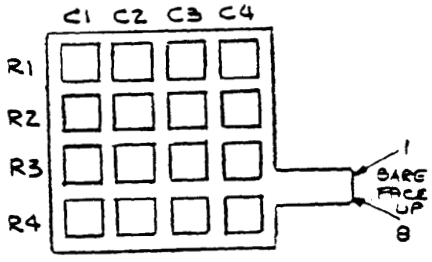

Front Panel to Computer Board #1: JC/PC
Connector: Augat 110-26001-102

Pin	Signal
1	DX0
2	DX1
3	DX2
4	DX3
5	DX4
6	DX5
7	DX6
8	DX7
9	DX8
10	DX9
11	DX10
12	DX11
13	GND
14	$+5V_m$ (Switched)
15	SYS RESET

Pin	Signal
16	KACK-
17	KREQ2+
18	KREQ1+
19	$+5V_m$ (Switched)
20	$+5V_m$ (Switched)
21	$+5V_m$ (Source)
22	AF1
23	AF2
24	AW2
25	$+5V_m$ (Source)
26	$+5V_m$ (Source)

Front Panel PCB to LCD: JD
Connector: Augat 325AG1F

Pin	Signal
1	BP
2	E6
3	D6
4	C6
5	DP5-6
6	E5
7	D5
8	C5
9	DP4-5
10	E4
11	D4
12	C4
13	DP3-4
14	E3
15	D3

IEE #1664-R-06 LIQUIDCRYSTAL DISPLAY

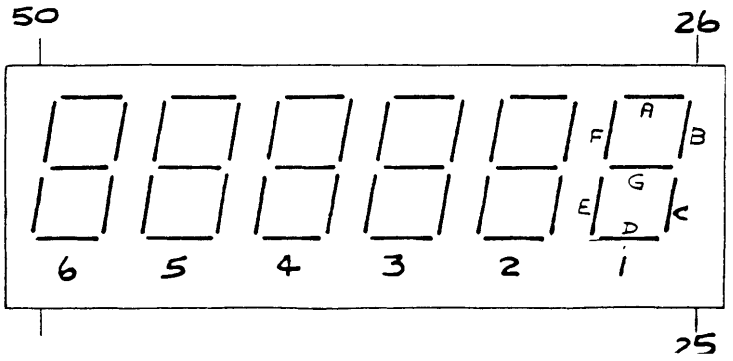

Pin	Signal
16	C3
17	DP2-3
18	E2
19	D2
20	C2
21	DP1-2
22	E1
23	D1
24	C1
25	B1
26	A1
27	F1
28	G1
29	B2
30	A2
31	F2
32	G2
33	L
34	B3
35	A3
36	F3
37	G3
38	B4
39	A4
40	F4
41	G4
42	L
43	B5
44	A5
45	F5
46	G5
47	B6
48	A6
49	F6
50	G6

Front Panel Electronics to Printer: JE/PE
Connector: Augat 110-26001-102

Pin	Signal
1	DIG 11
2	DIG 9
3	DOT 5
4	DIG 7
5	DOT 4
6	DIG 5
7	DIG 3
8	DIG 1
9	NC
10	NC
11	NC
12	NC
13	NC
14	DIG 12
15	DIG 10
16	DIG 8
17	DOT 3
18	DIG 6
19	DOT 2
20	DIG 4
21	DIG 2
22	DOT 1
23	Motor Yellow
24	Motor Red
25	Motor Orange
26	Motor Brown

Front Panel Cable to Printer Element: JF
Connector: Part of Texas Instruments Printer EPN9112

Pin	Signal
1	NC
2	DIG 12
3	DIG 11
4	DIG 10
5	DIG 9
6	DIG 8
7	DOT 5
8	DOT 3
9	DIG 7
10	DIG 6
11	DOT 4
12	DOT 2
13	DIG 5
14	DIG 4
15	DIG 3
16	DIG 2
17	DIG 1
18	DOT 1

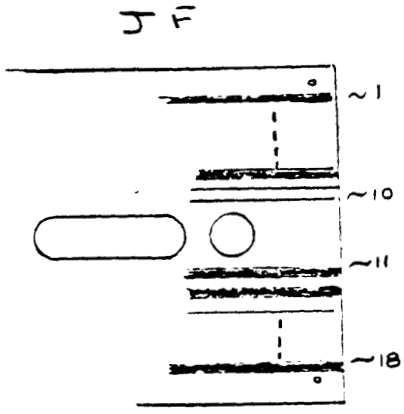

Computer Board #1 to Front Panel: JG/PG
Connector: Augat 110-26001-601

Pin	Signal
(Same as JC/PC)	

Computer Board #1 (JH) to Front Panel (JQ), Receiver (JM), Ext. Computer (JL)

Connector: Augat 110-26001-601

Pin	Signal	Destination
1	AF4	JQ
2	AF3	JQ
3	BS4	JQ
4	BW2	JQ
5	RCVR CLK	JM
6	RCVR DATA	JM
7	UART CLK	JL
8	720 DATA	JL
9	GND	JL
10	300 BAUD	JL
11	+5V from TTY	JL
12	5V UART	JL
13	NC	-
14	NC	-
15	Printer $+5V_B$	JQ
16	Printer Pwr Control	JQ
17	Printer $+12V_B$	JQ
18	$+5V_m$ to RCVR OPTO ISO	JM
19	GND to RCVR OPTO ISO	JM
20	SELF Test Output	JM
21	+12V from TTY Interface	JL
22	UART DATA	JL
23	-12V FROM TTY Interface	JL
24	CR Wait from TTY	JL
25	Printer $+12V_B$	JQ
26	NC	-

Computer Board 1,2,3, JI, JJ, JK (all connectors bussed pin for pin)
Connector: Viking 3VH 36/IJND

Pin	Signal
1	NC
2	BF3
3	$+5V_C$ Unswitched
4	$+12V_A$
5	$+5V_M$
6	XTB
7	XTA
8	V_M Lo
9	INT GNT
10	SKP INT
11	DEVSEL
12	GND
13	Sys Res & Pwr Up
14	Sys Res
15	Y
16	AS2
17	C2
18	MEMSW
19	$\overline{\text{MEMSW}}$
20	C1
21	$+12V_B$
22	GND
23	NC
24	$+5V_A$
25	APU OFF
26	2.4315MHz
27	XTC
28	24.315KHz
29	READD
30	MEMSEL
31	AS2

Pin	Signal
32	NC
33	NC
34	Wait
35	AR1
36	$+5V_B$
37	NC
38	LXMAR
39	S-T DATA
40	NC
41	NC
42	DX8
43	DX7
44	DX9
45	DX0
46	GND
47	DX10
48	DX1
49	NC
50	DX11
51	DX6
52	GND
53	AW1
54	DX2
55	4MHZ
56	DX3
57	Power A CTL
58	GND
59	DX4
60	NC
61	NC
62	DX5
63	NC
64	GND
65	PWR B Control

Pin	Signal
66	BF4
67	NC
68	NC
69	NC
70	$+5V_M$
71	NC
72	$+5V_M$

External Computer Connector: JL
Connector: ITT KPT07E16-26S

Pin	Signal
A	CR Wait
W	Spare
X	UART DATA
Y	-12V
Z	+12V
a	GND
c	+5V (from TTY)
B	UART CLK
C	300 BAND

Receiver to Computer JM
Connector: Winchester MRE-9P/PR

Pin	Signal
A	Receiver Data Out
B	Receiver Clock Out
C	Computer GND
D	$+5V_M$
E	Self Test Input

External Receiver Input Connector JN
Connector: KPT07E 16-8S

Pin	Signal
C	Input 1
D	Shield
E	Input 2

Receiver Power Input: JO
Connector: Winchester MRE 95J

Pin	Signal
A	+8 Volts
B	- 8 Volts
C	GND
D	Low Voltage Alarm
E	+5V

External Power and Charging Connector: JP
Connector: ITT KPT07E12-8S

Pin	Signal
A	Ext. Pwr
B	RCVR Batt Chg
C	RCVR GND
D	Processor Batt Chg
E	Processor GND
F	Spare
G	RCVR Batt Sense
H	Proc Batt Sense

Front Panel to Computer Board #3: JQ
Connector: Augat 110-26001-601

Pin	Signal
1	AF4
2	AF3
3	B54
4	BW2

Pin	Signal
15	$+5V_B$ Printer
16	Printer Power Control
17	$+12V_B$ Printer
25	$+12V_B$ Printer

Battery Module Connector: JR
Connector: Winchester MRE 95

Pin	Signal
A	Ext Pwr
B	RCVR Batt Chg
C	RCVR GND
D	Processor Batt Chg
E	Processor GND
F	RCVR Source
H	RCVR Sense
J	Processor Source
K	Processor Sense

Power Supply Board: JS
Connector: Elco 6007-22-44B

Pin	Signal
1	NC
2	-8V to RCVR
3	+8V to RCVR
4	+5V to RCVR
5	RCVR GND
6	RCVR LOW Voltage Alarm
7	NC
8	RCVR Batt Sense
9	RCVR Pwr +5V (Unswitched)
10	RCVR Batt Source
11	Proc GND

Pin	Signal
12	Proc Batt Low Alarm
13	Proc Battery Sense
14	$+5V_C$ to RAM & Proc. Switch (Unswitched)
15	Proc Batt Source
16	$+12V_B$ to Printer
17	Printer Pwr Control B
18	$+5V_M$ to Proc
19	AM9511 Pwr Control A
20	$+5V_B$ to Printer
21	$+5V_A$ to AM9511
22	$+12V_A$ to AM9511

Power Supply Board to Power Switch JT
Connector: Waldom 03-06-1041

Pin	Signal
1	$+5V_R$ Unswitched
2	GND
3	$+5V_R$ Switched

Battery Modules to Concience Fuser: JV
Connector: Waldom 03-06-10Y1

Pin	Signal
1	RCVR Source
2	RCVR Source (Fused)
3	PROC Source
4	PROC Source (Fused)

Front Panel Meter to Power Supply: JW
Connector: Waldom 03-06-1041

Pin	Signal
1	PROC GND
2	RCVR Source
3	PROC Source

Front Panel Meter to RCVR: JX

Connector: RCA Phono

Pin	Signal
Tip	RCVR VCXO Control Voltage
Ring	RCVR GND

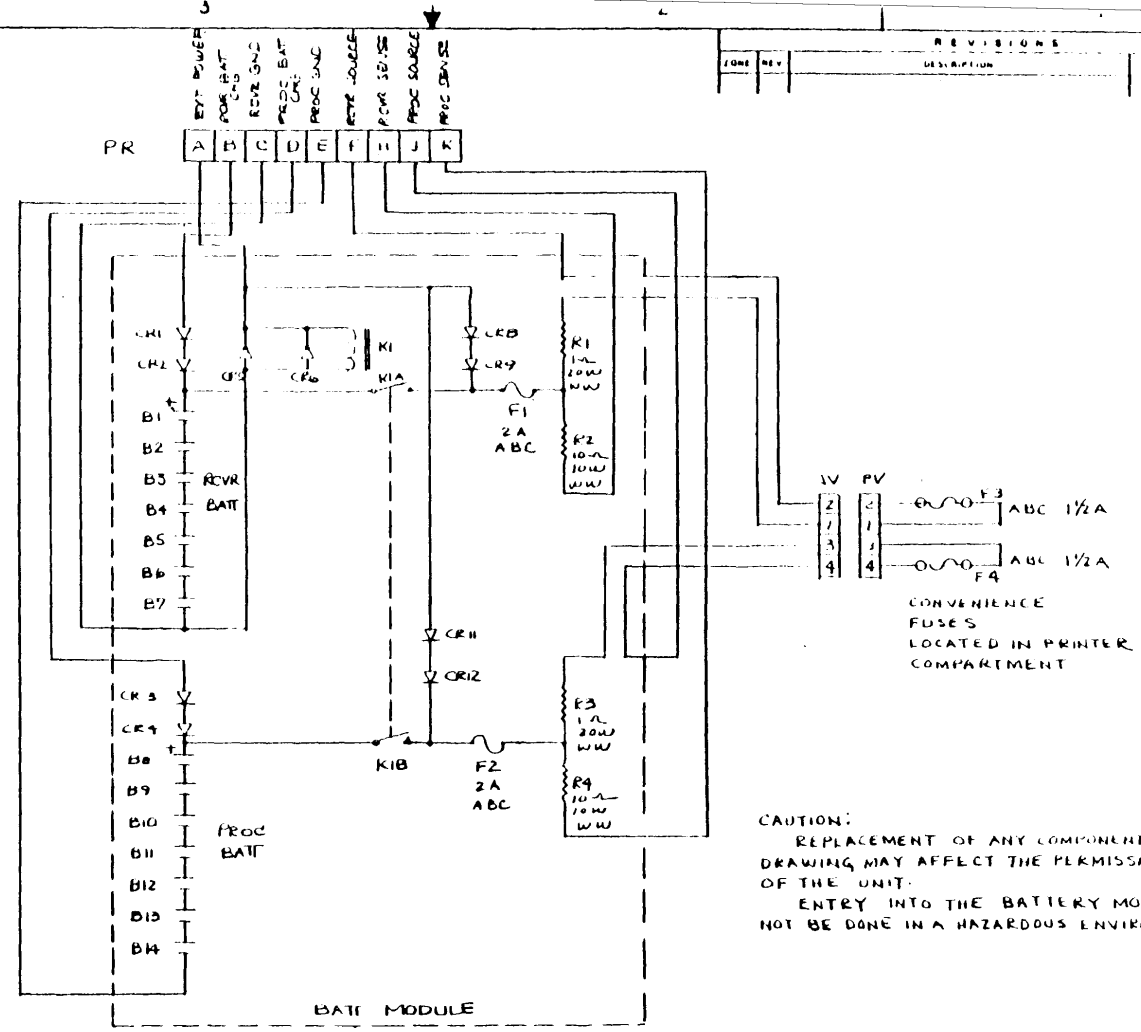

B1-B14:
ARE TYPE F
NiCAD BATTERIES

CR1-CR12:
ARE MR501
MOTOROLA DIODES

K1:
12V RELAY
BABBCOCK W399-2

CAUTION:
REPLACEMENT OF ANY COMPONENT ON THIS DRAWING MAY AFFECT THE PERMISSABILITY OF THE UNIT.
ENTRY INTO THE BATTERY MODULE MUST NOT BE DONE IN A HAZARDOUS ENVIRONMENT.

REVISIONS

ZONE	REV	DESCRIPTION	APPROV	DATE

UNLESS OTHERWISE SPECIFIED
1 DIMENSIONS ARE IN INCHES
2 BREAK SHARP EDGES & DEBURR
3 TOLERANCES ARE:
FRACTIONS DECIMALS ANGLES
MATERIAL
TREATMENT:
FINISH:
NEXT ASSY | USED ON
APPLICATION

CONTRACT NO. H0177069

	SIGNATURE	DATE
DR		
CHK		
ELEC		
MECH		
FINAL		

ENSCO, INC.
SPRINGFIELD, VIRGINIA

SCHEMATIC DIAGRAM, BATTERY MODULE

SIZE	CODE IDENT NO	DRAWING NO	REV
C	06359	1202-C-3033	

SCALE | SHEET

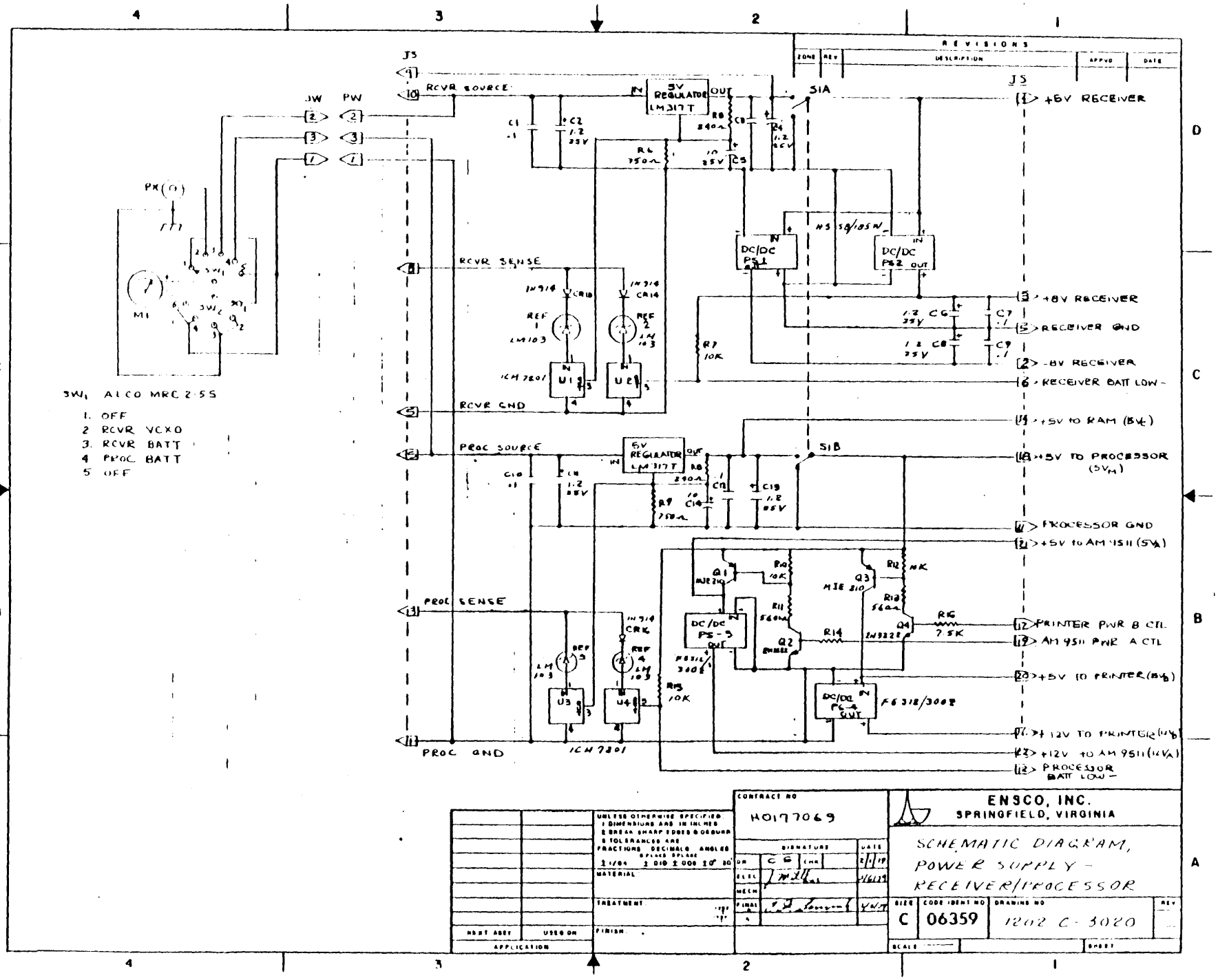
REVISIONS
ZONE REV DESCRIPTION APPVD DATE
J5
RCVR SOURCE
RCVR SENSE
RCVR GND
PROC SOURCE
PROC SENSE
PROC GND
JW PW
PX(0)
M1
SW1 ALCO MRC 2-5S
1. OFF
2 RCVR VCXO
3. RCVR BATT
4 PROC BATT
5 OFF
5V REGULATOR LM317T
DC/DC PS1
DC/DC PS2
DC/DC PS-3
DC/DC PS-4
S1A
S1B
+8V RECEIVER
+8V RECEIVER
RECEIVER GND
-8V RECEIVER
RECEIVER BATT LOW -
+5V TO RAM (5V_L)
+5V TO PROCESSOR (5V_M)
PROCESSOR GND
+5V TO AM 9511 (5V_A)
PRINTER PWR & CTL
AM 9511 PWR & CTL
+5V TO PRINTER (5V_P)
+12V TO PRINTER (12V_P)
+12V TO AM 9511 (12V_A)
PROCESSOR BATT LOW -
ICM 7201
LM103
1N914
MJE 210
MJE 310
2N3228
F6318/3008
CONTRACT NO
H0177069
ENSCO, INC.
SPRINGFIELD, VIRGINIA
SCHEMATIC DIAGRAM, POWER SUPPLY - RECEIVER/PROCESSOR
SIZE C
CODE IDENT NO 06359
DRAWING NO 1202 C-3020
SCALE
SHEET
MATERIAL
TREATMENT
FINISH
NEXT ASSY
USED ON
APPLICATION

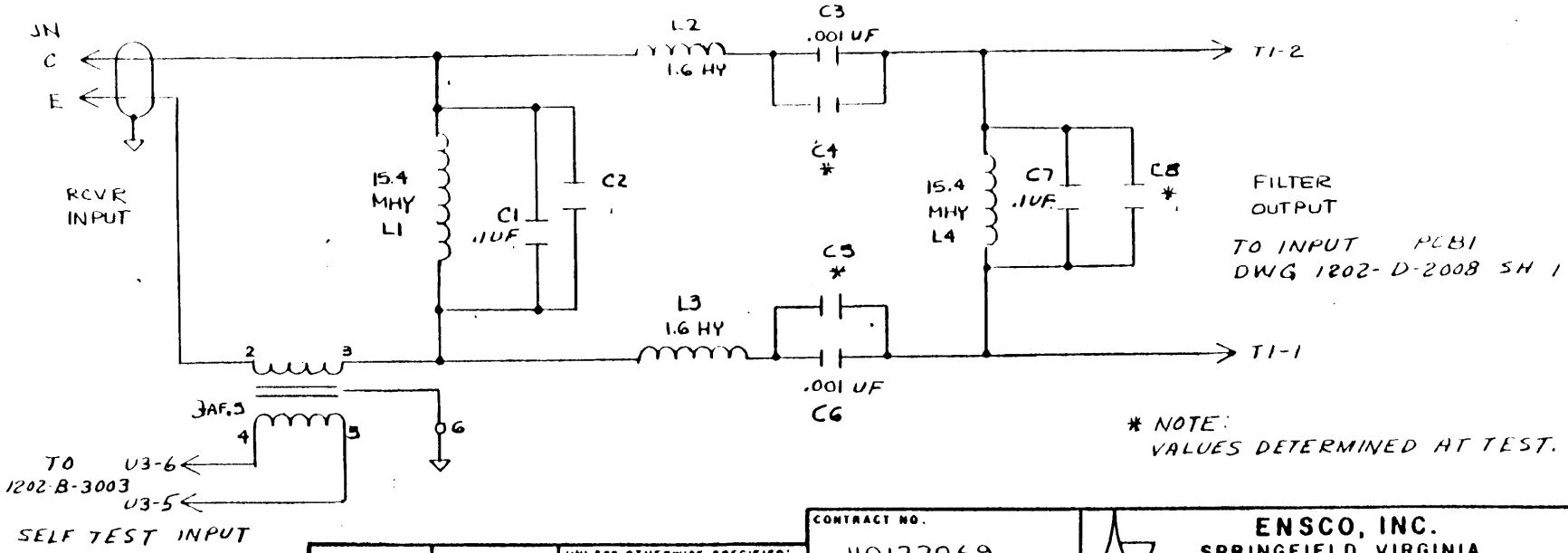

		UNLESS OTHERWISE SPECIFIED: 1. DIMENSIONS ARE IN INCHES 2. BREAK SHARP EDGES & DEBURR 3. TOLERANCES ARE: FRACTIONS ±1/64, DECIMALS 2 PLACE ±.010, 3 PLACE ±.006, ANGLES ±0° 30'	CONTRACT NO. H0177069		ENSCO, INC. SPRINGFIELD, VIRGINIA
		MATERIAL:	SIGNATURE / DATE		SCHEMATIC DIAGRAM, UPHOLE ELECTRONICS-FILTER FOR RECEIVER
		TREATMENT:	DR C.S CHK	2/23/79	
		FINISH:	ELEC	2/23/80	
NEXT ASSY	USED ON		MECH		SIZE B / CODE IDENT NO 06359 / DRAWING NO. 1202-B-2023 / REV —
APPLICATION			FINAL		SCALE: — / SHEET

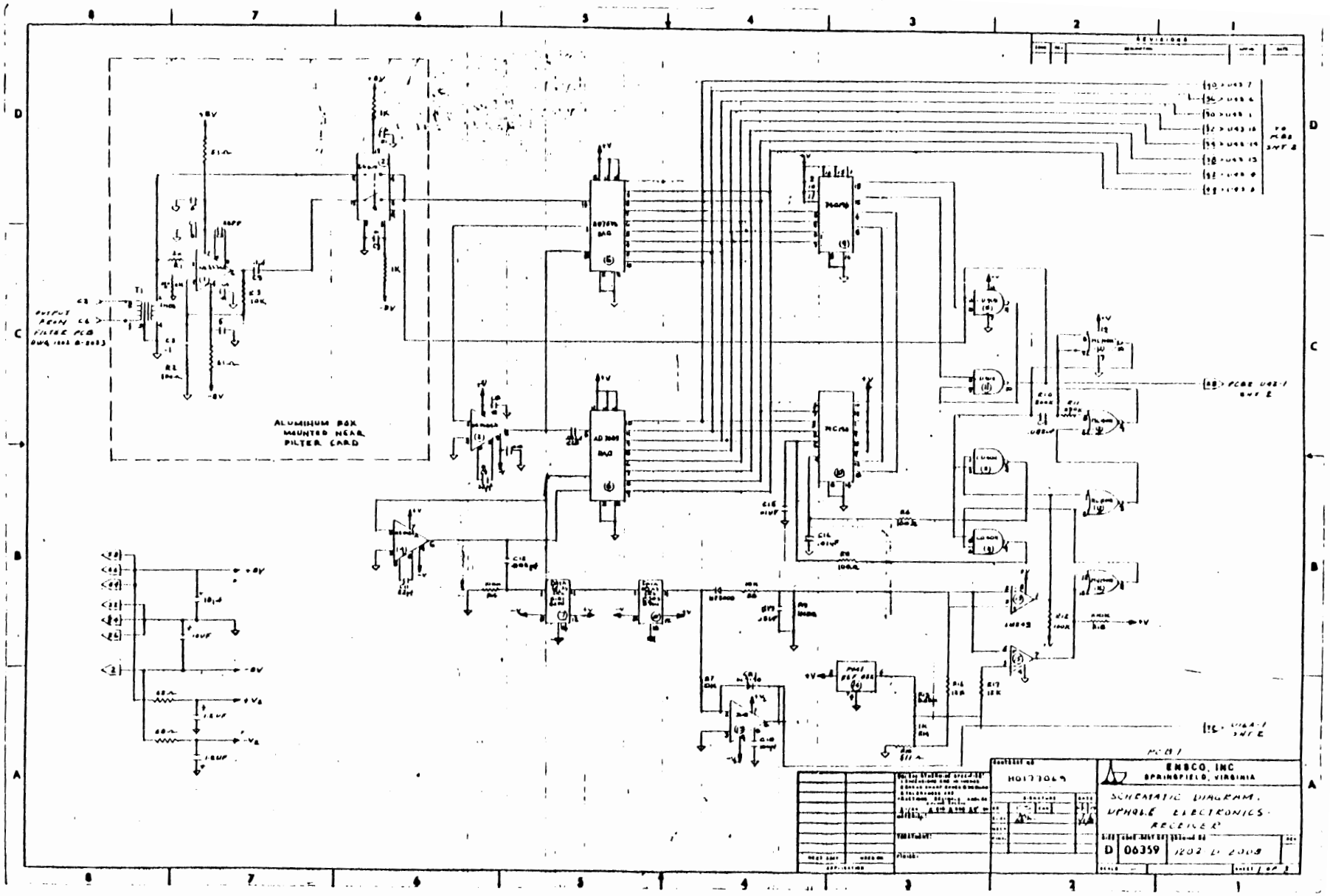
ALUMINUM BOX MOUNTED NEAR FILTER CARD
ENSCO, INC
SPRINGFIELD, VIRGINIA
SCHEMATIC DIAGRAM, UPHOLE ELECTRONICS RECEIVER
D 06359

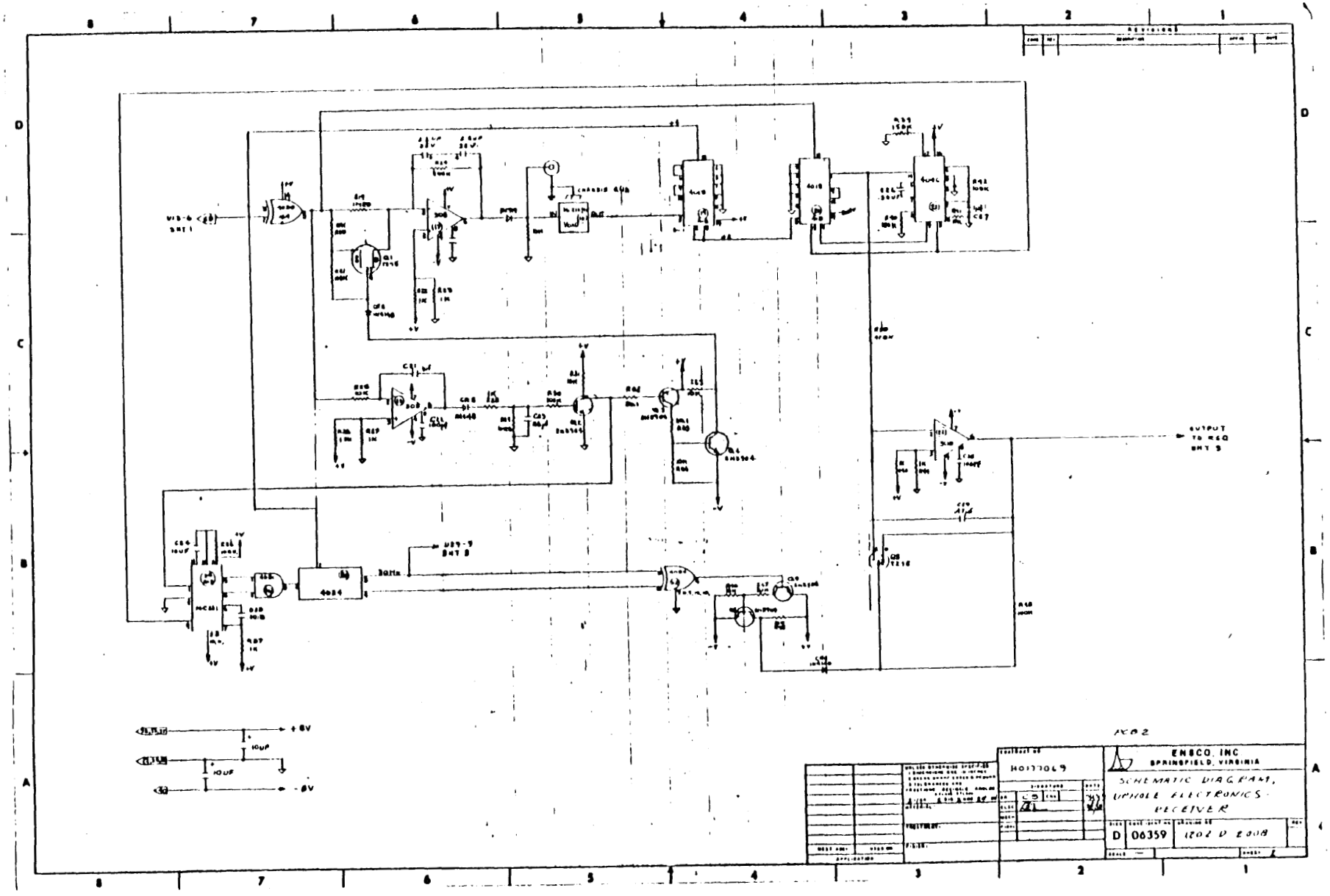
ENSCO, INC
SPRINGFIELD, VIRGINIA
SCHEMATIC DIAGRAM,
UPHOLE ELECTRONICS
RECEIVER
D 06359
H0177069
+8V
-8V
10UF
OUTPUT TO REC BKT 3

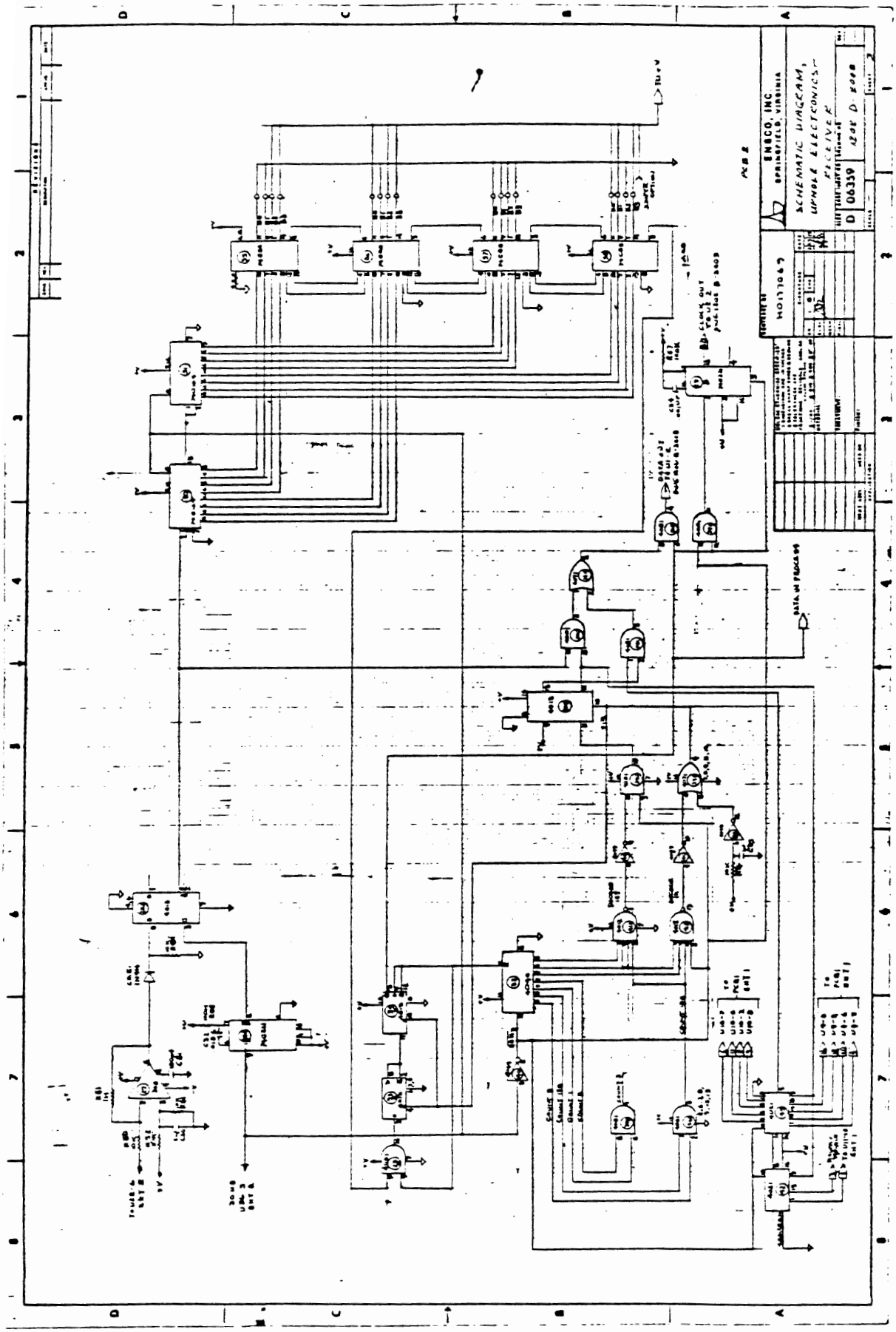
ENSCO, INC.
SPRINGFIELD, VIRGINIA
SCHEMATIC DIAGRAM,
UPWARD ELECTRONICS
RECEIVER
D 00359

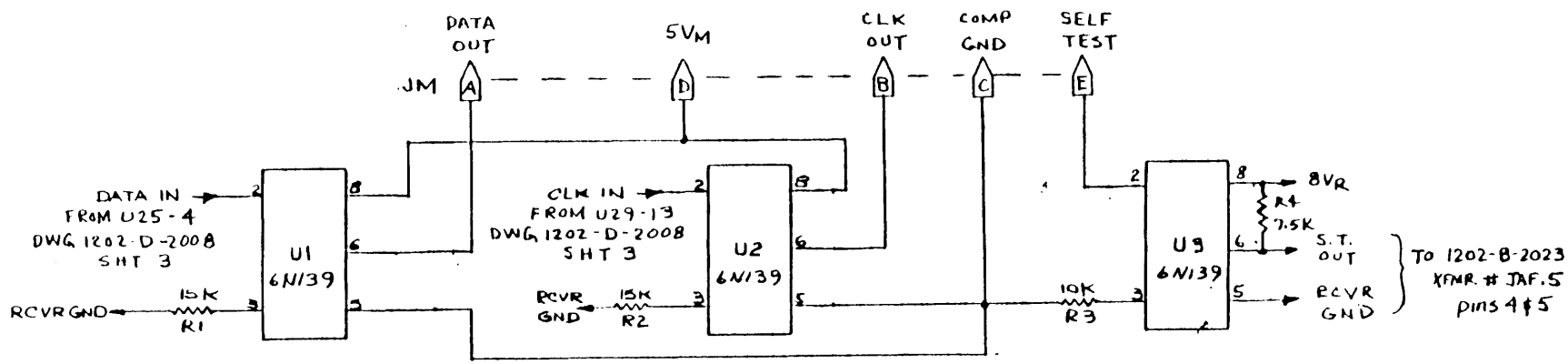

NEXT ASSY	USED ON	UNLESS OTHERWISE SPECIFIED: 1. DIMENSIONS ARE IN INCHES 2. BREAK SHARP EDGES & DEBURR 3. TOLERANCES ARE: FRACTIONS ±1/64, DECIMALS 2 PLACE ±.010, 3 PLACE ±.005, ANGLES ±0° 30'	CONTRACT NO. H0177069		
APPLICATION		MATERIAL:	SIGNATURE	DATE	
			DR C.S CHK	11/14/8	
			ELEC	2/6/80	
		TREATMENT:	MECH		
			FINAL		
		FINISH:			

ENSCO, INC.
SPRINGFIELD, VIRGINIA

SCHEMATIC DIAGRAM,
RECEIVER-COMPUTER INTERFACE
(OPTO ISOLATOR)

SIZE	CODE IDENT NO	DRAWING NO.	REV
B	06359	1202-B-3003	—

SCALE: — SHEET

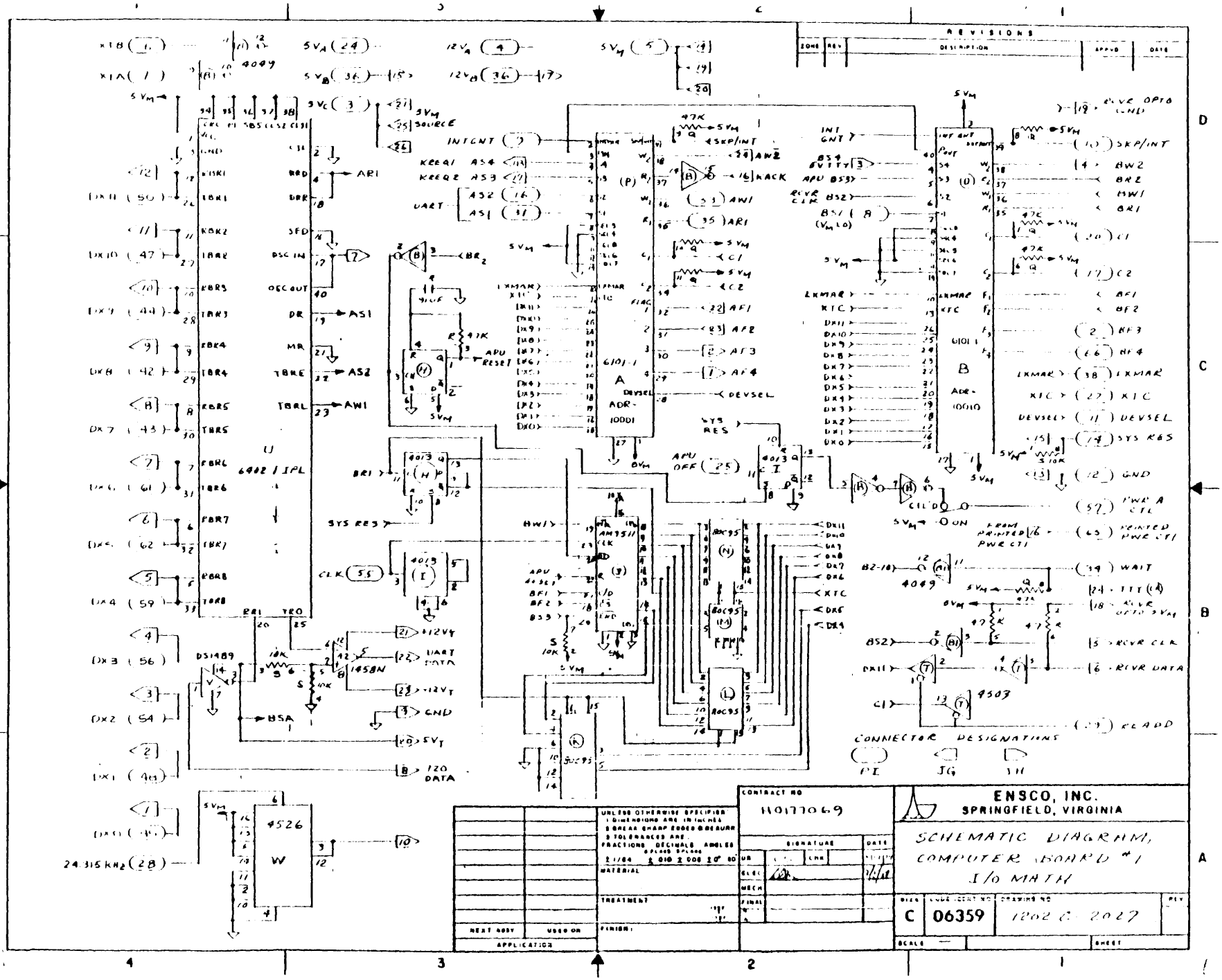
REVISIONS
ZONE
REV
DESCRIPTION
APPVD
DATE
4099
U
6402 / IPL
6101-1
A
ADR-10001
6101-1
B
ADR-10010
4013
AM9511
8C95
4526
W
DS1489
1458N
4049
9503
CONNECTOR DESIGNATIONS
PI
JG
JH
UNLESS OTHERWISE SPECIFIED
DIMENSIONS ARE IN INCHES
BREAK SHARP EDGES & DEBURR
TOLERANCES ARE:
FRACTIONS DECIMALS ANGLES
MATERIAL
TREATMENT
FINISH
NEXT ASSY
USED ON
APPLICATION
CONTRACT NO
H0177069
SIGNATURE
DATE
ENSCO, INC.
SPRINGFIELD, VIRGINIA
SCHEMATIC DIAGRAM,
COMPUTER BOARD #1
I/O MATH
SIZE
C
CODE IDENT NO
06359
DRAWING NO
1202 C 2027
REV
SCALE
SHEET

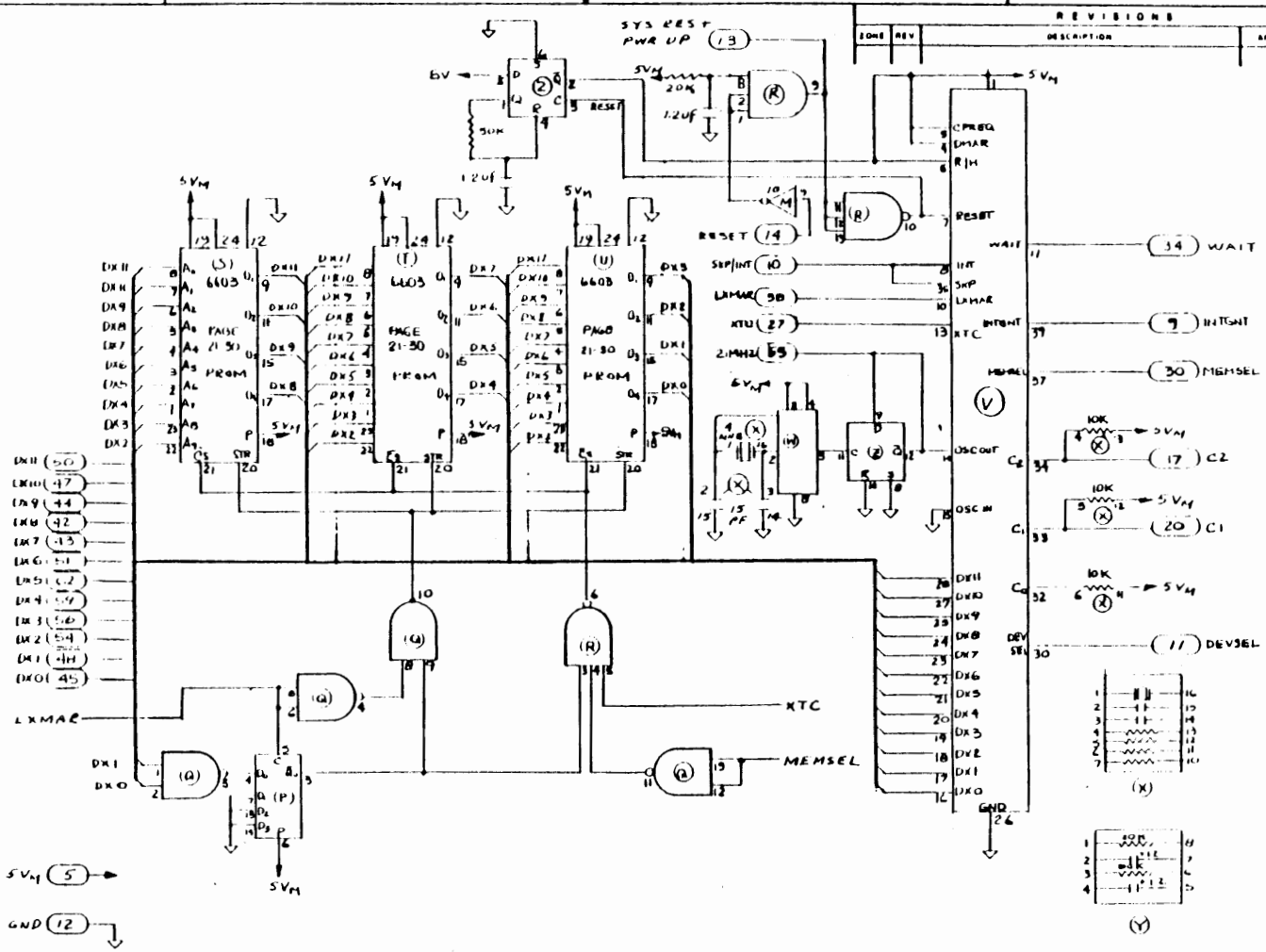

CHIP DESIGNATION		
LTR	TYPE	PINS
Z	4013	14
P	4042	16
Q	4011	14
R	4023	14
S, T, U	6603	24
V	IM6100 AIP6	40
W	7209	8
X	COMP CARRIER	16
Y	COMP CARRIER	8

REVISIONS

ZONE	REV	DESCRIPTION	APPVD	DATE

UNLESS OTHERWISE SPECIFIED
1. DIMENSIONS ARE IN INCHES
2. BREAK SHARP EDGES & DEBURR
3. TOLERANCES ARE
FRACTIONS DECIMALS ANGLES
2 PLACE 3 PLACE
± 1/64 ± .010 ± .005 ± 0° 30'

MATERIAL:
TREATMENT:
FINISH:
NEXT ASSY
USED ON
APPLICATION

CONTRACT NO N00177069

	SIGNATURE	DATE
DR	C.S.	3/21/74
ELEC		
MECH		
FINAL		

ENSCO, INC.
SPRINGFIELD, VIRGINIA

SCHEMATIC DIAGRAM, COMPUTER BOARD #2 - PAGE 21-30 (6000₈ - 7777₈) FOR [illegible]

SIZE	CODE IDENT NO	DRAWING NO	REV
C	06359	1202-C 2028	

SCALE — SHEET 1 OF 2

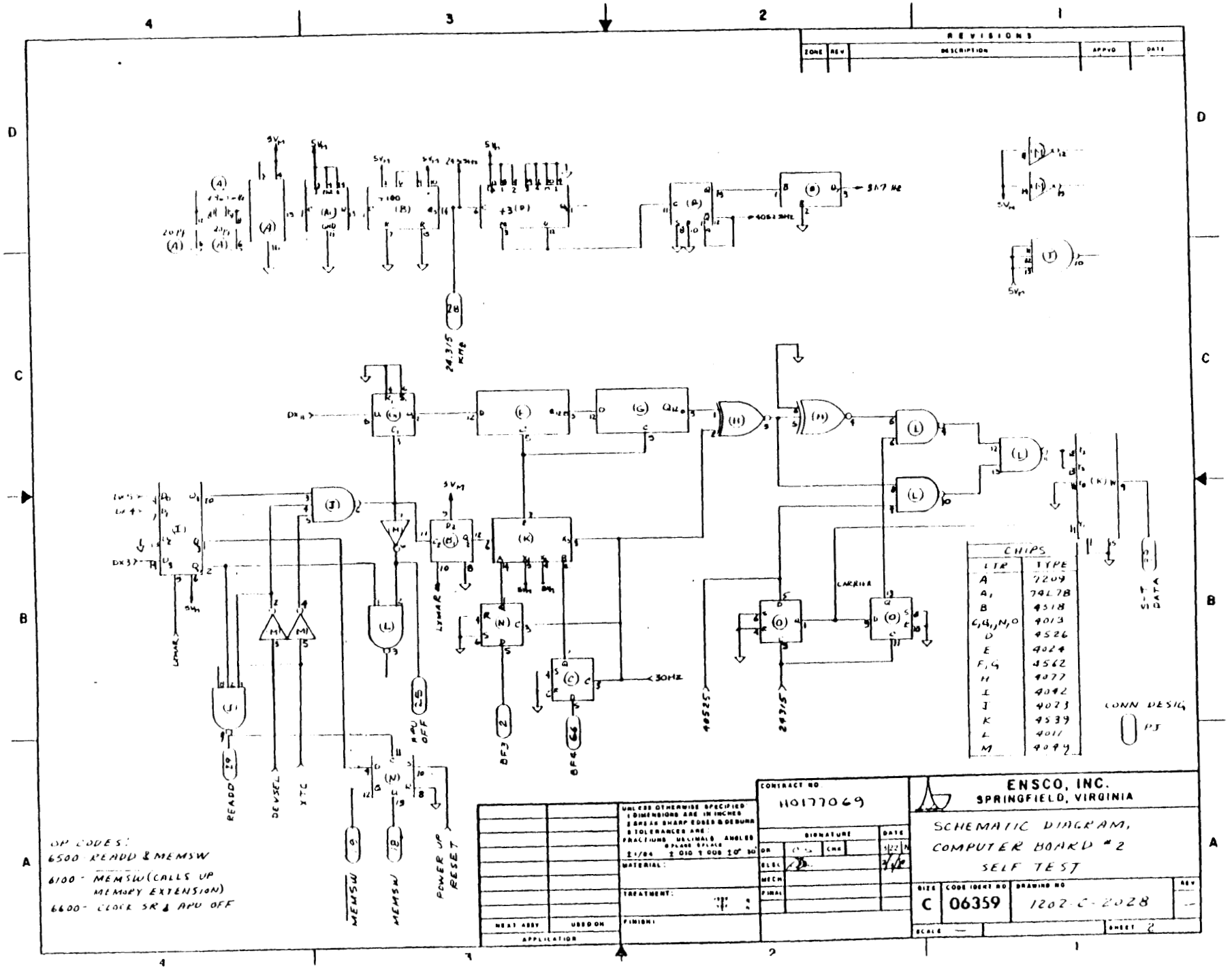
REVISIONS
ZONE
REV
DESCRIPTION
APPVD
DATE
24.315 KHZ
317 HZ
40525 HZ
30HZ
LTMAR
CARRIER
40525
24315
SLT DATA
CONN DESIG
PJ
CHIPS
LTR
TYPE
A 7209
A1 74LS78
B 4518
C,G,I,N,O 4013
D 4526
E 4024
F,G 4562
H 4077
I 4042
J 4023
K 4539
L 4011
M 4049
READD
DESEL
2.X
MEMSW
MEMSW
POWER UP RESET
APD OFF
BF3
BF4
OP CODES:
6500 READD & MEMSW
6100 - MEMSW (CALLS UP MEMORY EXTENSION)
6600 - CLOCK SR & APD OFF
CONTRACT NO
H0177069
ENSCO, INC.
SPRINGFIELD, VIRGINIA
SCHEMATIC DIAGRAM, COMPUTER BOARD #2 SELF TEST
SIZE
C
CODE IDENT NO
06359
DRAWING NO
1202-C-2028
SCALE
SHEET 2
MATERIAL:
TREATMENT:
FINISH:
NEXT ASSY
USED ON
APPLICATION

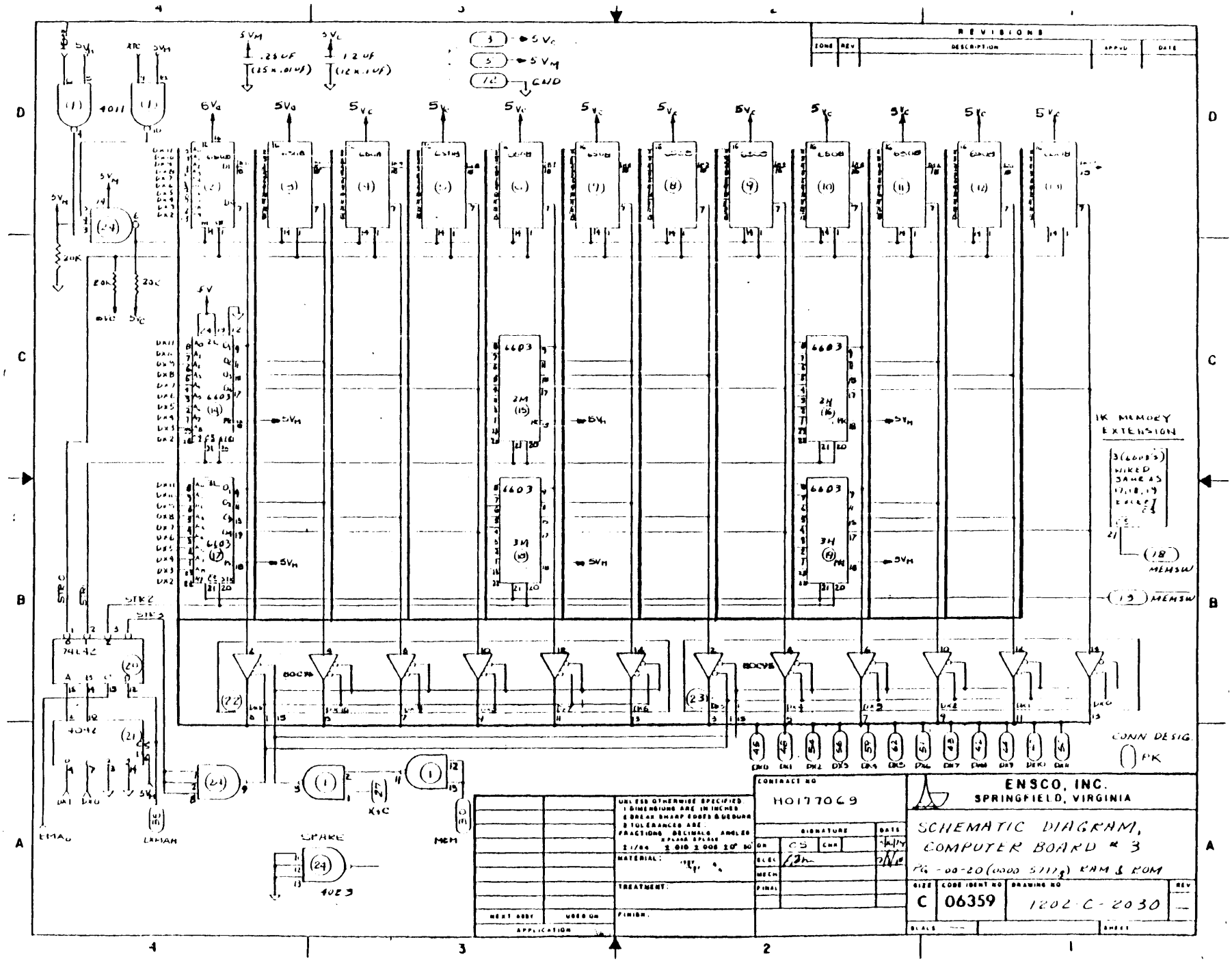
REVISIONS
ZONE
REV
DESCRIPTION
APPVD
DATE
4011
6603
74LS42
40H2
40H3
1K MEMORY EXTENSION
3(6603'S) WIRED SAME AS 17,18,19 EXCEPT
MEMSW
CONN DESIG.
PK
CONTRACT NO
H0177069
ENSCO, INC.
SPRINGFIELD, VIRGINIA
SCHEMATIC DIAGRAM, COMPUTER BOARD # 3
PG - 00-20 (0000 5117) RAM & ROM
SIZE
C
CODE IDENT NO
06359
DRAWING NO
1202-C-2030
SCALE
SHEET
UNLESS OTHERWISE SPECIFIED
MATERIAL:
TREATMENT:
FINISH:
NEXT ASSY
USED ON
APPLICATION

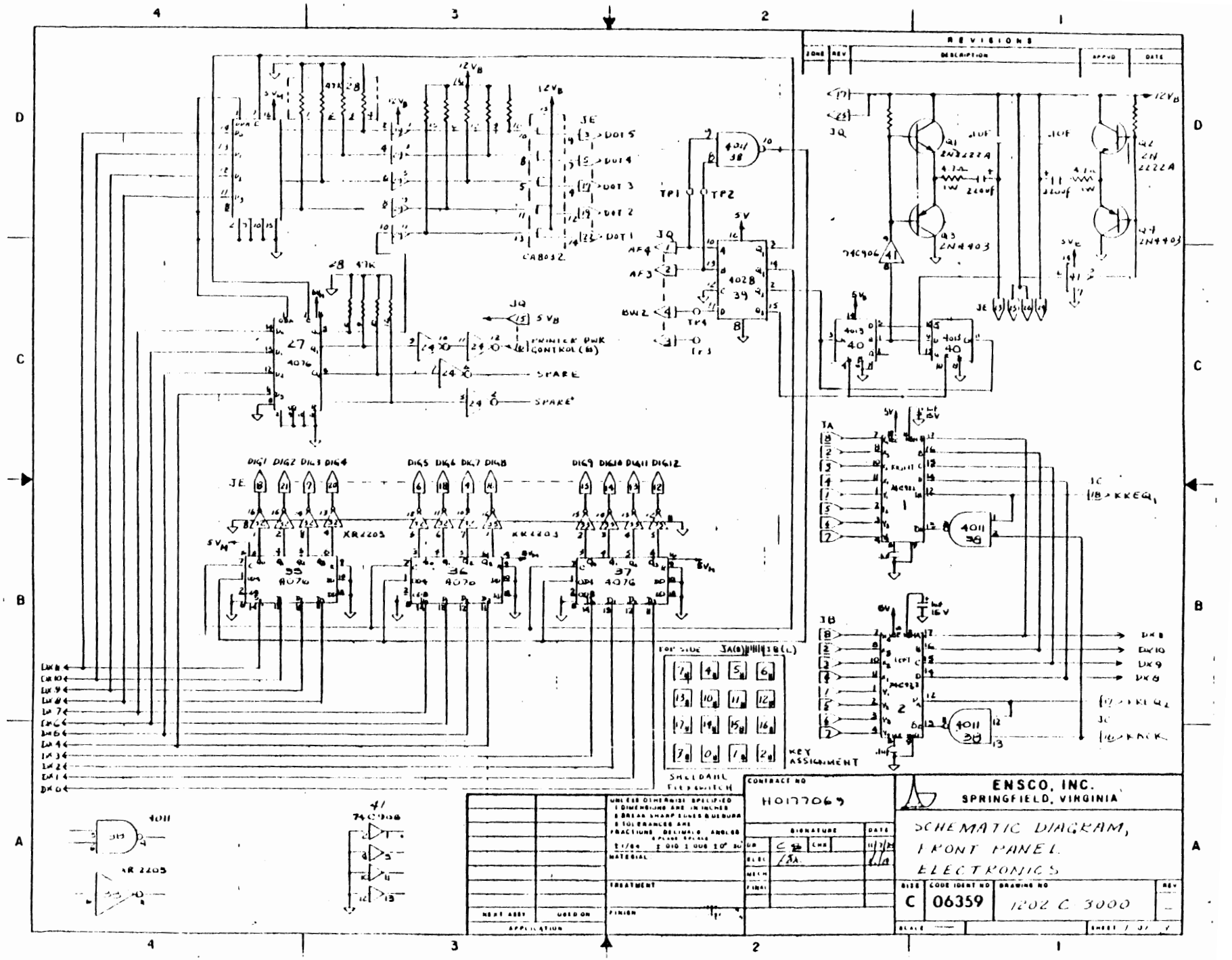
REVISIONS
ZONE
REV
DESCRIPTION
APPVD
DATE
ENSCO, INC.
SPRINGFIELD, VIRGINIA
SCHEMATIC DIAGRAM,
FRONT PANEL
ELECTRONICS
CONTRACT NO
H0177069
SIZE
C
CODE IDENT NO
06359
DRAWING NO
1202 C 3000
REV
SHEET 1 OF 1
SCALE
UNLESS OTHERWISE SPECIFIED
DIMENSIONS ARE IN INCHES
BREAK SHARP EDGES & DEBURR
TOLERANCES ARE
FRACTIONS DECIMALS ANGLES
MATERIAL
TREATMENT
FINISH
NEXT ASSY
USED ON
APPLICATION
SIGNATURE
DATE
DR
CHK
ENGR
MECH
FINAL
KEY ASSIGNMENT
SHELDAHL
FLEXSWITCH
CAB032
XR2203
4011
74C906
4076
4028
4013
MC1231
12VB
5VB
SPARE
PRINTER PWR CONTROL (B)
DIG1 DIG2 DIG3 DIG4
DIG5 DIG6 DIG7 DIG8
DIG9 DIG10 DIG11 DIG12
DOT 5
DOT 4
DOT 3
DOT 2
DOT 1
TP1
TP2
TP3
TP4
2N2222A
2N4403
KKEQ1
KKCK

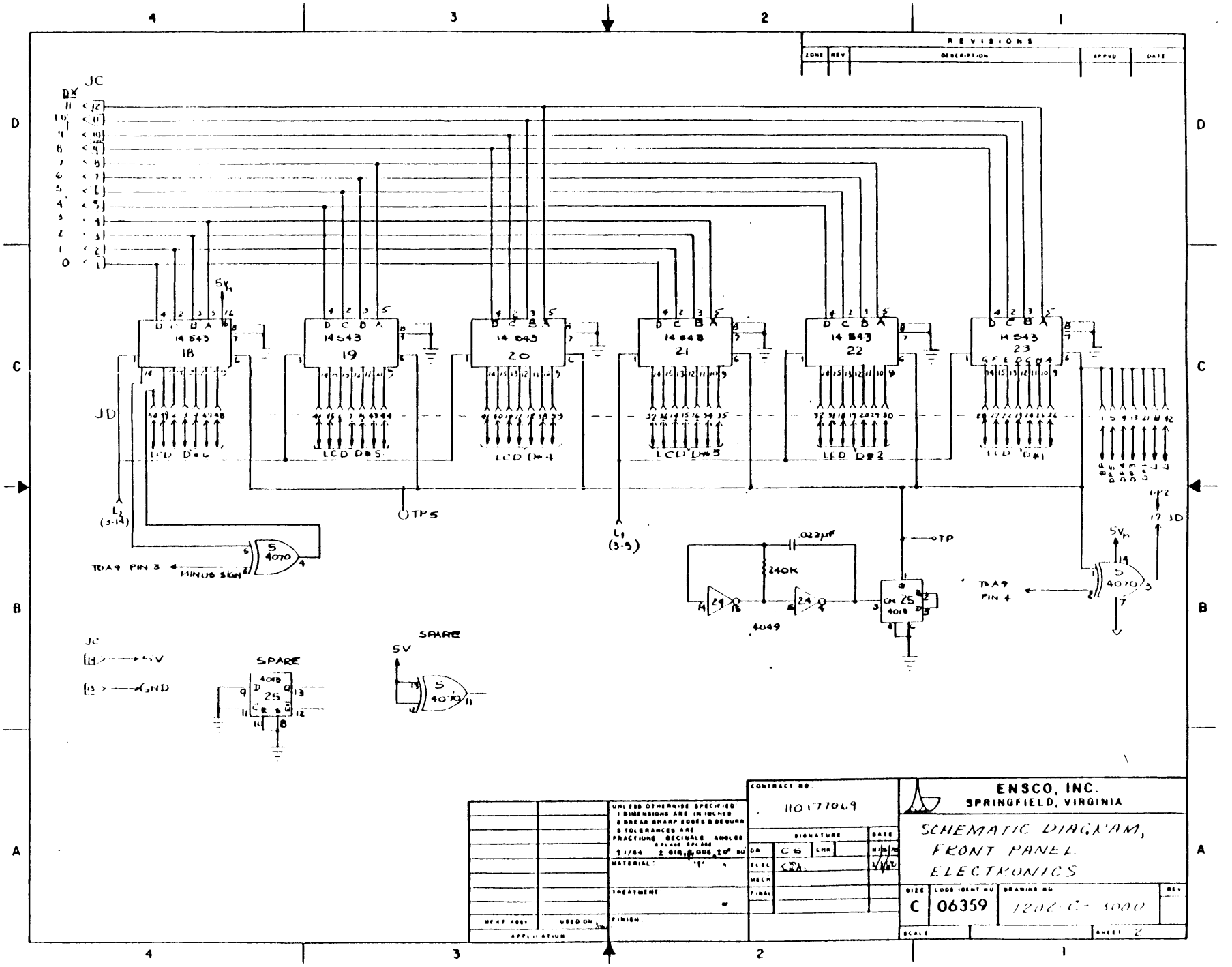
REVISIONS
ZONE
REV
DESCRIPTION
APPVD
DATE
JC
JD
14 543
18
19
20
21
22
23
LCD D#6
LCD D#5
LCD D#4
LCD D#3
LED D#2
LCD D#1
TP5
L1 (3-9)
L2 (3-14)
TO A9 PIN 8
MINUS SIGN
5 4070
.022μf
240K
4049
TP
CK 25 4018
TO A9 PIN 4
TP2
TO JD
SPARE
5V
GND
CONTRACT NO.
110177069
UNLESS OTHERWISE SPECIFIED
1 DIMENSIONS ARE IN INCHES
2 BREAK SHARP EDGES & DEBURR
3 TOLERANCES ARE
FRACTIONS DECIMALS ANGLES
MATERIAL
TREATMENT
FINISH
NEXT ASSY
USED ON
APPLICATION
SIGNATURE
DATE
DR
ELEC
MECH
FINAL
ENSCO, INC.
SPRINGFIELD, VIRGINIA
SCHEMATIC DIAGRAM, FRONT PANEL ELECTRONICS
SIZE
C
CODE IDENT NO
06359
DRAWING NO
1202 C-3000
SCALE
SHEET 2

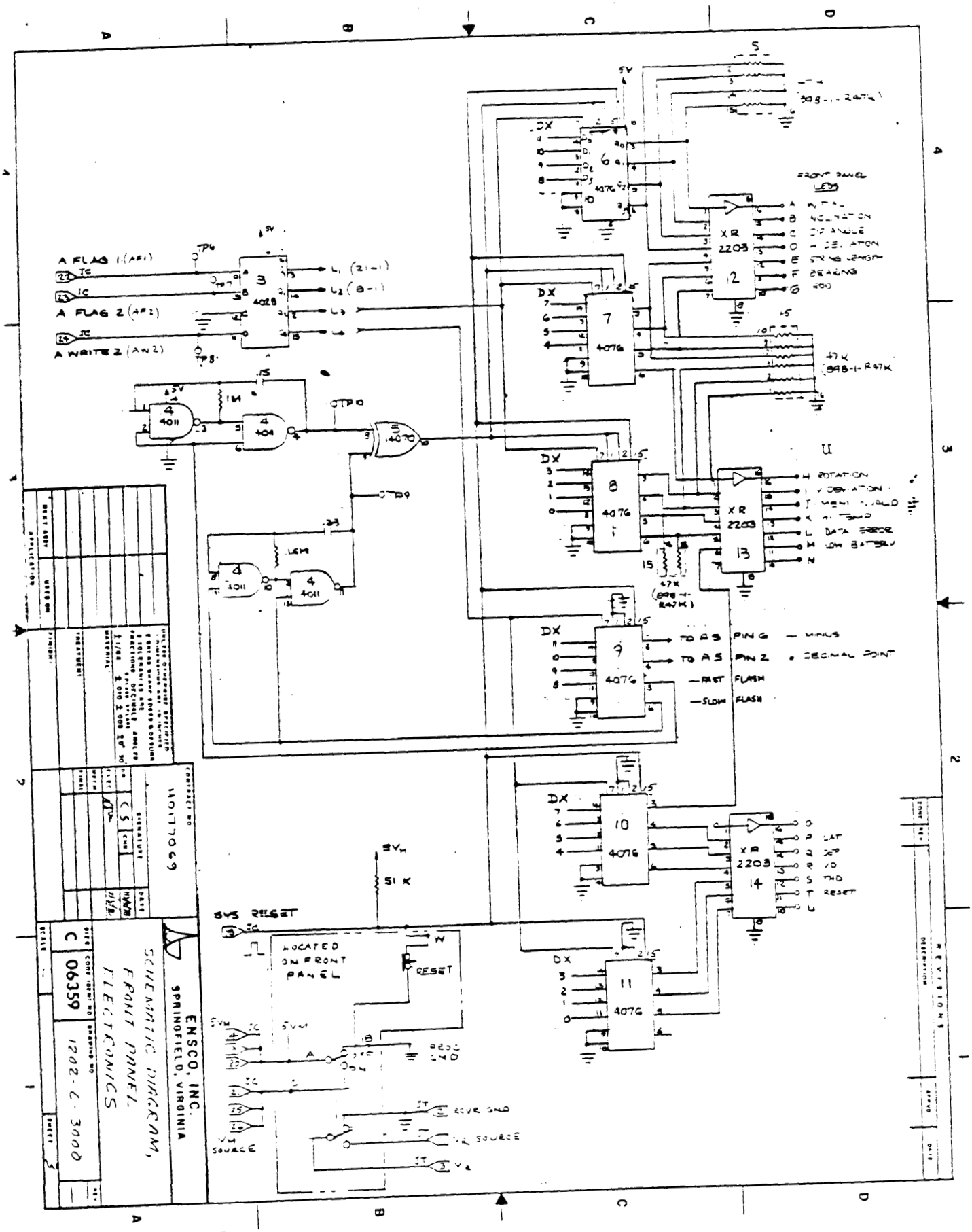
A FLAG 1 (AF1)
A FLAG 2 (AF2)
A WRITE 2 (AW2)
SYS RESET
LOCATED ON FRONT PANEL
RESET
ENSCO, INC.
SPRINGFIELD, VIRGINIA
SCHEMATIC DIAGRAM, FRONT PANEL ELECTRONICS
C
06359
1202-C-3000

The following schematics represent auxillary equipment developed during this project, but are not part of either the downhole or uphole package. None of these items are required for operational use.

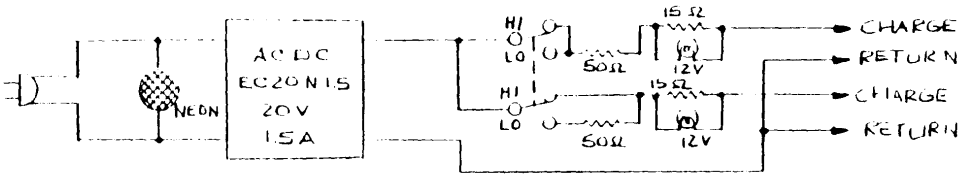

NOTES

1. ALL RESISTORS = 10W
2. HI WILL CHARGE IN 14 HOURS MAX
3. LO WILL TRICKLE CHARGE

		UNLESS OTHERWISE SPECIFIED: 1 DIMENSIONS ARE IN INCHES 2 BREAK SHARP EDGES & DEBURR 3 TOLERANCES ARE: FRACTIONS ±1/64 DECIMALS 3 PLACE ±.010 2 PLACE ±.005 ANGLES ±0° 30'	CONTRACT NO. 110177069		ENSCO, INC. SPRINGFIELD, VIRGINIA
		MATERIAL:	SIGNATURE / DATE		SCHEMATIC DIAGRAM SPHERE EPROM CHECK
		TREATMENT	DR C.S CHK	12/6/80	
		FINISH	ELEC	12/6/80	
NEXT ASSY	USED ON		MECH		
APPLICATION			FINAL		SIZE B / CODE IDENT NO. 06359 / DRAWING NO. 1202-B-2029 / REV —
					SCALE — / SHEET

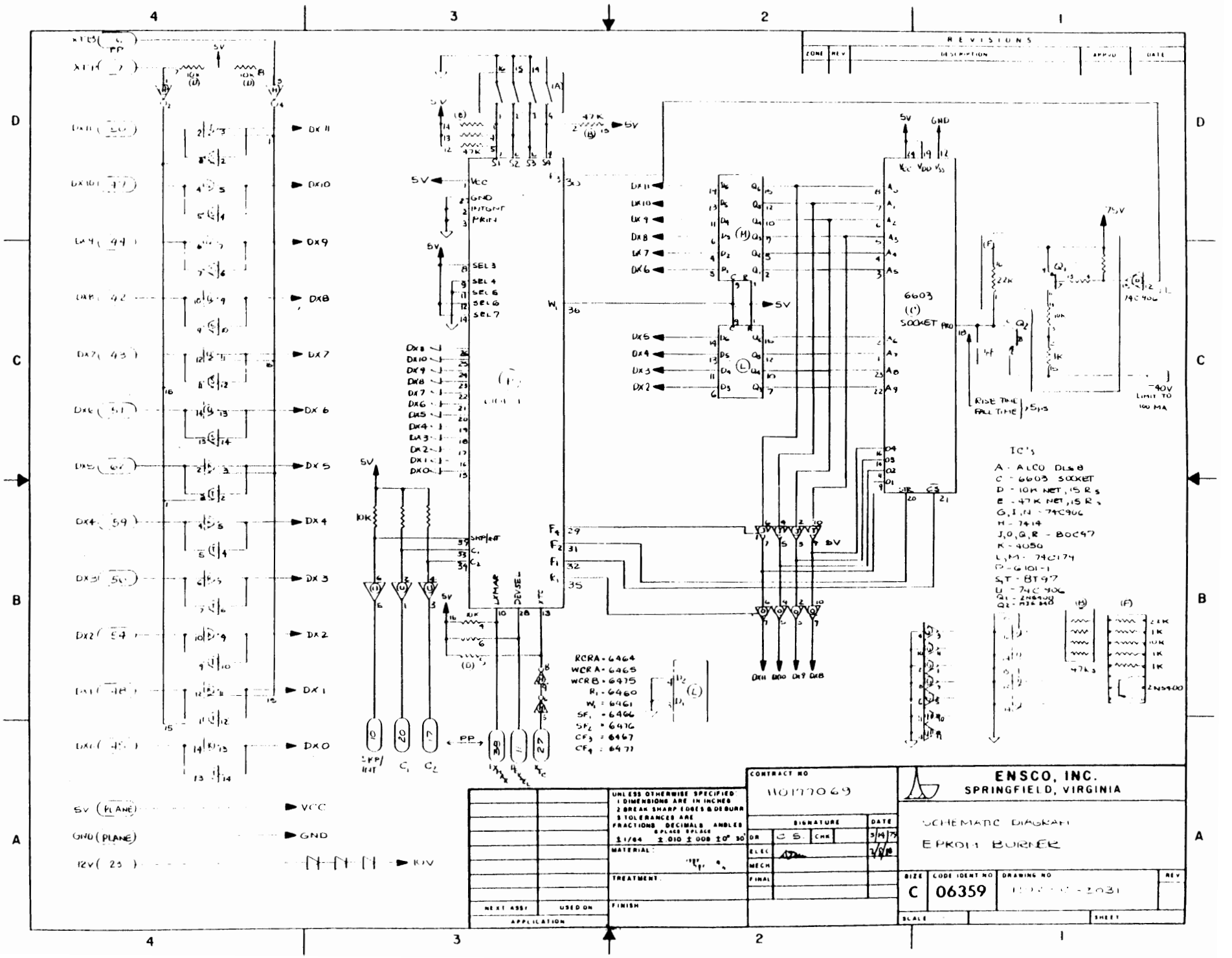
REVISIONS
ZONE
REV
DESCRIPTION
APPRVD
DATE
6603
SOCKET
IC'S
A - ALCO DL58
C - 6603 SOCKET
D - 10K NET, 15 R's
E - 47K NET, 15 R's
G, I, N - 74C906
H - 7414
J, O, Q, R - 80C97
K - 4050
L, M - 74C174
P - 6101-1
S, T - BT97
U - 74C906
Q1 - 2N4400
Q2 - MJE340
RCRA - 6464
WCRA - 6465
WCRB - 6475
R1 - 6460
W1 - 6461
SF1 - 6466
SF2 - 6476
CF3 - 6467
CF4 - 6477
RISE TIME
FALL TIME
>5μs
-40V
LIMIT TO
100 MA
UNLESS OTHERWISE SPECIFIED
1 DIMENSIONS ARE IN INCHES
2 BREAK SHARP EDGES & DEBURR
3 TOLERANCES ARE
FRACTIONS DECIMALS ANGLES
2 PLACE 3 PLACE
±1/64 ±.010 ±.008 ±0° 30'
MATERIAL
TREATMENT
FINISH
NEXT ASSY
USED ON
APPLICATION
CONTRACT NO
W0177069
SIGNATURE
DATE
DR
C.S.
CHK
ELEC
MECH
FINAL
ENSCO, INC.
SPRINGFIELD, VIRGINIA
SCHEMATIC DIAGRAM
EPROM BURNER
SIZE
C
CODE IDENT NO
06359
DRAWING NO
SCALE
SHEET
REV

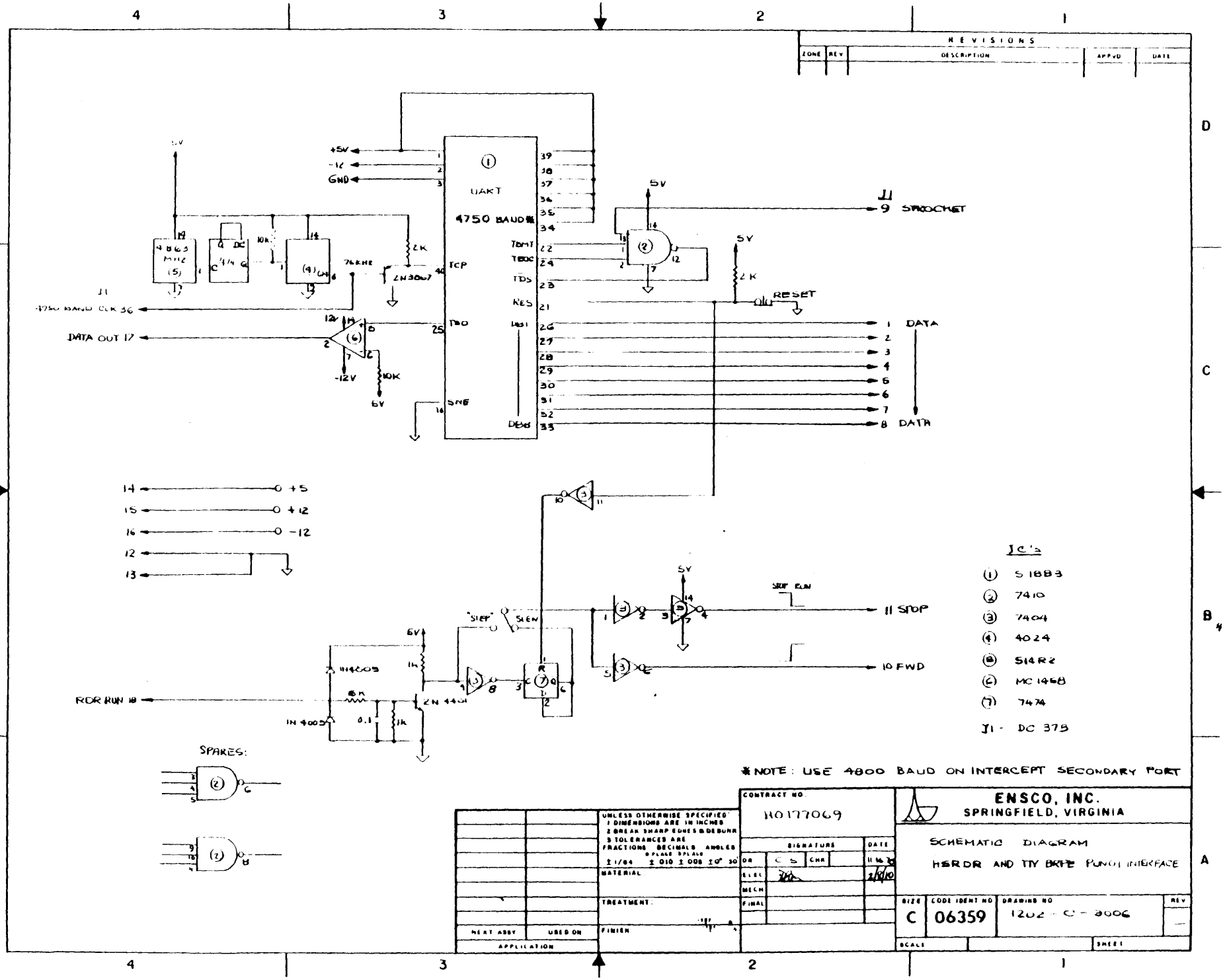
REVISIONS
ZONE
REV
DESCRIPTION
APPVD
DATE
UART
4750 BAUD*
+5V
-12
GND
TCP
TBO
SNE
TBMT
TBDC
TDS
RES
DBB
RESET
DATA
SPROCKET
J1
4750 BAUD CLK 36
DATA OUT 17
RDR RUN 18
STOP
FWD
STOP RUN
"STEP"
SLEW
2N3007
2N4401
IN4003
SPARES:
IC's
1 S 1883
2 7410
3 7404
4 4024
5 514R2
6 MC 1468
7 7474
J1 - DC 375
*NOTE: USE 4800 BAUD ON INTERCEPT SECONDARY PORT
CONTRACT NO.
H0177069
ENSCO, INC.
SPRINGFIELD, VIRGINIA
SCHEMATIC DIAGRAM
HSRDR AND TTY BRPE PUNCH INTERFACE
SIZE
C
CODE IDENT NO
06359
DRAWING NO
1202 - C - 3006
REV
SCALE
SHEET
UNLESS OTHERWISE SPECIFIED
1 DIMENSIONS ARE IN INCHES
2 BREAK SHARP EDGES & DEBURR
3 TOLERANCES ARE
FRACTIONS DECIMALS ANGLES
MATERIAL
TREATMENT
FINISH
NEXT ASSY
USED ON
APPLICATION
SIGNATURES
DATE
DR
CHK
ELEC
MECH
FINAL

The microprocessor employed in the uphole processor is the Intersil IM6100. It is a 12 bit CMOS type LSI Integrated Circuit that evaluates the software of the Digital Equipment Corporation (DEC) PDP8/E. All of the assembly language programs listed below are assembled using PDP8/E assembler available from DEC.

COMPUTER PROGRAM INDEX

PROGRAMS

ACC	Accumulate keyboard #'s
ANG,AVG	Displays angle average
ANGA,ANGE	Displays angle; changes keyboard # to radians
AON	Turns on APU power
APU DRIVERS	FLT; DIVF; ADDF; SUBF; PUSH; ARTAN; POP; MULF; MULD; ARSIN; SORT; FIX; DIVD; SUBD; SINE; CRAB; BW; WTAPUF; RDAPUF
APU OPERATORS	LDS; ADDS; MULS; XCH CHS
AVGV	Averages values
BATCHK	Checks batteries
BLANK & DISPR	Writes Display
BRTAB	KYSR branch table
CHEK	BATCHK extended
CHLITE	Changes lights
COM,COM1	Compares 2 values for out of limits
CONOE	Continue or enter
CONV	Displays memory
DATA	Accepts receiver data
DATCAL	Calculates data; battery condition and temperature
DAT1	DATCAL extended
DELAY	Delay
DIP/CAL	Calculates dip angle
DISCO	Displays code
DISTR	Distributes data for APU
DOOB	Loads and floats #
ENT	Enters 10,000
EXEC	Examines and modifies
EXEC OVERFLOW	EXEC extended
EXITE	EXEC extended

COMPUTER PROGRAM INDEX (CONT'D.)

FAULT	Handles the 9 code
GET	Gets a data word
GETIN	Computes initial conditions
GTIN	Sequences initial conditions
GTIN EXTENDED	Extends rouginte GTIN
INIT	Initialization bootstrap
INITCO	Initial conditions print routine
KYBLK	Key blank; KYSR patch
KYEX	KYSR extended
KYSR	Left-hand keyboard service routine
KYSRC	KYSR calling routine
LOA,B	Lights off - A,B
LSW	Least significant word
MAIN1	Main program, part 1
MAIN2	Main program, part 2
MA1EX	MAIN1 extended
MONITOR	System monitor
M2EX	MAIN2 extended
NORM	Normalizes data
ONES FILLER	Fills memory with 1's
PIAS	Pi; add or subtract
POF	Adds .005
PRINT	Operates printer
PRINT ROUTINES	INCO; RST; SUR
PROC1	Process 1
PROC2	Does survey calculations
PROM BURNER	Burns programmable read-only memory chips
PROPA	Process 1 extended
RBAT	Checks receiver batteries
RDT	Handles data monitoring
RESTR	Restart-print routine
RESTART	Restart
RSTC	Restart calling routine

COMPUTER PROGRAM INDEX (CONT'D.)

SCDATA	Scale data
SELF TEST CALLS & PATCHES	STST; STSTD; STSTC
STATUS	Checks sign of APU #
STEST	Self test
STESTC	Self test calling routine
STZ	Scale data; call
SUM	Sums keyboard numbers
SURVEY	Survey-print routine
TEME	Temperature errors
WAIT	Waits for receiver clock
.005 FLOAT	Supplies the number .005

```
                PIAT /from P1...Add or Subtract
                ◆2305
2305  1043      PIAT, TAD PBUF;/ if PBUF is 0
2306  7650       IAC CLA;
2307  5320       JMP P10; /return
2310  4172       CALL; /otherwise, load P1 and proceed
2311  6144       PI;
2312  1033       TAD KEYT;  /if keyt hard 0
2313  7650       IAC CLA;
2314  5317       JMP P13 /add P1
2315  4156       I;       /otherwise, subtract P1
2316  5320       JMP P10
2317  4153      P13, A
2320  5575      P10, RETURN

                NORM
                ◆2337
2337  7774      FORM, -4;
2340  7775      THM, -3
2341  3042      NORM, DCA CTR2; /make CTR2 point to beginning of data
2342  1340       TAD THM; /make CTR count 3 things
2343  3020       DCA CTR;
2344  1042       TAD CTR2 /AC point to 1st word
2345  4137      NA, W;    /write the word
2346  4145       P;       /square it
2347  4150       M;
2350  1010       TAD TEM; /"w" makes TEM point to next word
2351  3020       ISZ CTR; /3 times?
2352  5245       JMP NA;  /no, do it again
2353  4153       A;       /yes, do (DW1)^2+(DW2)^2+(DW3)^2
2354  4153       A;
2355  4172       CALL; /√(DW1)^2+(DW2)^2+(DW3)^2=N
2356  3703       IOPT;
2357  1340       TAD THM /set up CTR for 3 things again
2360  3020       DCA CTR;
2361  1042       TAD CTR2; /point to 1st word again
2362  3010       DCA TEM
2363  4145      NB, P; /save N
2364  1010       TAD TEM; /write DW1
2365  4137       W;
2366  4172       CALL; /do DW1÷N
2367  3144       WCH;
2370  4161       D;
2371  1010       TAD TEM; /point back to DW1
2372  1337       TAD FORM; /replace DW1 with DW1÷N
2373  4143       A;
2374  3020       ISZ CTR; /3 times?
2375  5343       JMP NB /no, do it again
2376  5575      RETURN /yes
```

```
                 PROC1
                 P=4145;
                 M=4150;
                 R=4142;
                 W=4137;
                 I=4156;
                 SINE=2723;
                 ARCIN=2677;
                 ARTAN=2655
                 D=4161;
                 MOH=3144;
                 A=4153;
                 PBUF=43;
                 KEYT=33;
                 STATUS=4347;
                 CALL=4172;
                 RETURN=5575
                 TEM=10;
                 COS=6136;
                 PI=6144;
                 SQRT=2703;
                 CTR2=42;
                 CTR=20;
                 CHS=3761;
                 POP=2661;
                 PROPA=6260
                 ◆2000
2000  0373       PIT, 373;
2001  0257       GGM, 257;
2002  0267       GGY, 267;
2003  0263       GGZ, 263;
2004  0253       MCOI, 253;
2005  0243       YCOI, 243;
2006  0247       ZCOI, 247
2007  0513       INC2, 513;
2010  0357       COIT, 357;
2011  0317       DIP, 317;
2012  0323       IMD, 323;
2013  0327       COID, 327;
2014  0233       COIP, 233;
2015  0237       IMP, 237
2016  0333       RCI, 333;
2017  0223       R1, 223;
2020  0227       R2, 227;
2021  2020       PCO, PCO-1;
2022  0327        327;
2023  0243        243;
2024  0173        173;
2025  2024       TWO, TWO-1;
2026  0000        0;
2027  0200        200;
2030  0002        2
```

```
2031  7300  PROC1, CLA;
2032  1201   TAD GGX;
2033  4137   W;
2034  4172   CALL;
2035  2677   ARCIN;
2036  4145   P;
2037  1300   TAD PIT;
2040  5641   JMP I .+1; /patch in PROPA (W;XCH;CHS;A)
2041  6260   PROPA;
2042  1207   TAD INC2
2043  4142   R;
2044  4172   CALL;
2045  6136   COS;
2046  1210   TAD COST;
2047  4142   R;
2050  1211   TAD DIP;
2051  4137   W;
2052  4145   P;
2053  4172   CALL;
2054  2723   SINE;
2055  1212   TAD SIND;
2056  4142   R;
2057  4172   CALL;
2060  6136   COS
2061  4145   P;
2062  1213   TAD COSD;
2063  4142   R;
2064  1210   TAD COST;
2065  4137   W;
2066  4150   M;
2067  1204   TAD XCOS;
2070  4137   W;
2071  1212   TAD SIND;
2072  4137   W;
2073  1201   TAD GGX;
2074  4137   W;
2075  4150   M;
2076  4156   S
2077  4172   CALL;
2100  3144   XCH;
2101  4161   D;
2102  1214   TAD COSF;
2103  4142   R;
2104  1202   TAD GGY;
2105  4137   W;
2106  4172   CALL;
2107  3761   CHS;
2110  4172   CALL;
2111  4347   STATUS;
2112  3033   DCA KEYT
2113  1203   TAD GGZ;
2114  4137   W;
2115  4172   CALL;
2116  3761   CHS;
2117  4172   CALL;
2120  4347   STATUS;
2121  3043   DCA FBUF;
2122  4161   D;
```

```
0123  4172   CALL;
0124  0655   ARTAN;
0125  4172   CALL;
0126  0305   PIA2
0127  4145  P;
0130  1216   TAD PI1;
0131  4142   P;
0132  4145   P;
0133  4172   CALL;
0134  0723   SINE;
0135  1206   TAD ZCOS;
0136  4137   W;
0137  4150   M;
0140  4172   CALL;
0141  0144   MCH;
0142  4172   CALL;
0143  0136   COS;
0144  1205   TAD VCOS
0145  4137   W;
0146  4150   M;
0147  4156   I;
0150  1213   TAD COSD;
0151  4137   W;
0152  4161   D;
0153  4172   CALL;
0154  4347   STATUS;
0155  3033   DCA NEXT;
0156  1214   TAD COSP;
0157  4137   W;
0160  4145   P
0161  4172   CALL;
0162  4347   STATUS;
0163  3043   DCA PBUF;
0164  4172   CALL;
0165  2661   POP;
0166  4161   D;
0167  4172   CALL;
0170  0655   ARTAN
0171  4172  CALL;
0172  0305   PIA2;
0173  4172   CALL;
0174  0761   CHS;
0175  5776   JMP I .+1;
0176  0200   PR
             *0200
0200  1307  PR, TAD MSWR;
0201  4137   W;
0202  4156   I;
0203  1210   TAD BERR;
0204  4142   P;
0205  5575   RETURN
0206  0337  PHI, 337;
0207  0347  MSWR, 347;
0210  0507  BERR, 507
```

```
                    DATA
                        TEMO=77
                    CALL=4173                   Loads up the data bytes
                        RETURN=5575
                        DATD=74
                        READD=6500              Comes back with AC=0...timeout
                        TEM1=66                 error, >25 ms between clks
                        TEM2=DATD                                  1...no errors
                        CTR=20
                        CTR1=22
                        CTR2=42
                        BIB=6443
                        PBUF=43
                        LOA=3154

                        *2400

2400  7742  TN,     -36
2401  0243  DAT1,   243
2402  0001  MIN,    1
2403  7766  TE,     -12
2404  0006  II,    6

2405  7305  DATA,   CLA CLL IAC RAL /0002_8
2406  4173          CALL
2407  3634          DICCO /display "2"
2410  4173          CALL
2411  3154          LOA/lights off
2412  7120          CTL/make sure all of L4 is off
2413  4173          CALL
2414  2516          CALITE
2415  1200          TAD TN/set CTR up to count 30_10 data bits that will
2416  3020          DCA CTR/#1 has already been      be thrown away
2417  5224          JMP GARB1      thrown away by EXEC, so
2420  4173  GARB,   CALL      /jump right to GARB1
2421  2557          WAIT
2422  7450          IMA
2423  5575          RETURN
2424  3077  GARB1,  DCA TEMO/has a 1 if no timeout error here
2425  2020          ISZ CTR
2426  5230          JMP GARB/throw away another one
2427  1201          TAD DAT1/addr of 1st 4 byte data location
2430  3010          DCA 10/into an autoindex
2431  1203          TAD TE/CTR1 is channel counter, set up with 10_10
2432  3022          DCA CTR1
2433  3043  A,      DCA PBUF/clear PBOB
2434  4173          CALL/get a data word of 12_10 bits
2435  3727          GET
2436  7650          IMA CLA/timeout error?
2437  5575          RETURN /yes
2440  1074          TAD TEME/get data word
2441  7004          RAL/adjust it to be 2's complement binary
2442  7040          CMA
```

```
                                  lower order 8 bits   higher order 4 bits
2443  7010          RAR
2444  3074          DCA TEM3/and save it
2445  4173          CALL/form 16 bit # in TEM2(LO) & TEM1(HI)
2446  3203          DISTR
2447  1074          TAD TEM3/get data word LO
2450  3410          DCA I 10/put in 1st of 4 bytes (i.e., location 244 & 245)
2451  1026          TAD TEM1/get data word HI
2452  3410          DCA I 10/put in 2nd of 4 bytes. Now a single precision 16 bit
2453  3410          DCA I 10 /INCR autoindex      integer is available in the for
2454  3410          DCA I 10 /INCR autoindex      the APU likes
2455  4173          CALL/wait for next clock
2456  2557          WAIT
2457  7650          SNA CLA/timeout error?
2460  5575          RETURN/yes
2461  7300          CLA CLL/no, get parity bit
2462  6500          READD
2463  0203          AND MSK/mask off LSB, bit 11
2464  1043          TAD PBUF/add the parity counter
2465  7010          RAR/get CSB of result into link
2466  7630          SZL CLA/Parity OK?
2467  5273          JMP C /no
2470  2022          ISZ CTR1/parity OK, chalk up another channel in CTR1
2471  5233          JMP A /get another one
2472  5305          JMP D /all done
2473  7040  C.      CMA/turn on data error light
2474  7431          MQL
2475  7010          RAR/link is set, so make bit 0=1 for "data error" light
2476  4173          CALL/do it
2477  2516          CALITE
2500  1204          TAD CI /display a "6" for parity error
2501  4173          CALL
2502  3234          DISCO
2503  3077          DCA TEM0/put a 0 in TEM0 to signal "data error"
2504  5233          JMP A /get another word without stopping
2505  4173  D.      CALL/get receiver data
2506  3727          GET
2507  7650          SNA CLA/timeout error?
2510  5575          RETURN/yes
2511  1074          TAD TEM3/TEM2 has binary receiver data
2512  3410          DCA I 10 /put it into last data location
2513  1077          TAD TEM0/recall error info
2514  5575          RETURN
```

CHLITE /CHANGE LITE

```
                                          LINK:  0=L3 latches
                                                 1=L4 latches
                L3R=44                     MQ:   0=turn off an item
                L4R=21                           0=turn on an item
                WCRAA=6425                 AC:   bit to be turned on or off
                AW2=6431                         turn on-all zeros but desired bit
                TEMC=73                          turn off-all ones but desired bit

                *2516
2516  3026  CHLITE, DCA TEM1/hold AC
2517  7430         SZL/L3 or L4?
2520  1352         TAD L4/AC=1400g signifies L4 latches
2521  1351         TAD L3/AC=1000g signifies L3 latches
2522  6425         WCRAA/select the appropriate latch
2523  7630         SZL CLA
2524  5330         JMP T
2525  1353         TAD CH3/if L3, load TEMC with L3R address
2526  3073         DCA TEMC
2527  5338         JMP U
2530  1354  T,     TAD CH4/if L4, load TEMC with L4R address
2531  3073         DCA TEMC
2532  7521  U,     SNA/see if it's a turn on or a turn off
2533  7640         SZA CLA
2534  5341         JMP CH2/its a turn on
2535  1473         TAD I TEMC/get contents of latch register for turn off
2536  0026         AND TEM1/turn off the selected bit (i.e., latch the register)
2537  6431         AW2/by doing an AW2
2540  5346         JMP EXIT
2541  1473  CH2,   TAD I TEMC/get contents of latch register
2542  7421         MQL/put in MQ so can do an OR
2543  1026         TAD TEM1/get the turn on word
2544  7501         MQA/OR the latch register with the desired turn on word
2545  6431         AW2/turn on that bit
2546  3473  EXIT,  DCA I TEMC/update the latch holding register
2547  7100         CLL
2550  5573         RETURN
2551  1000  L3,    1000
2552  0400  L4,    400
2553  0044  CH3,   L3R
2554  0021  CH4,   L4R
```

/WAIT Return with AC=1 if no timeout error, else AC=0

```
2555  0005  FI,     5
2556  4416  WATE,   -3382
2557  1356  WAIT,   TAD WATE/load CRT2 with timeout delay
2560  3042          DCA CTR2
2561  6443  W1,     BS2/data clock?
2562  5365          JMP W2 /no, jump to count down for timeout
2563  7301          CLA IAC /set AC=1
2564  5575          RETURN
2565  2042  W2,     ISZ CTR2/incr timeout counter
2566  5361          JMP W1/check again for data clock
2567  7340          CLA CLL CMA/signal "L3" & "turn on" to CHLITE
2570  7421          MQL
2571  7130          STL RAR /set "data error" bit
2572  4172          CALL
2573  2516          CHLITE /tight up "data error"
2574  1355          TAD FI /send "5" message code to display
2575  4172          CALL
2576  3234          DISCO
2577  5575          RETURN
```

/GET Forms a raw 12 bit data word & return with PBUF indicating parity of that word

```
                    *3725
3725  0001  MSK1,   1
3726  7764  TW,     -14
3727  1326  GET,    TAD TW/CTR will count 12_10 bits
3730  3020          DCA CTR
3731  3074          DCA TEM2/clr TEM2, the data word accumulator (DWA)
3732  7004  GET1,   RAL/get link back in bit 11
3733  1074          TAD TEM2/put into DWA
3734  7004          RAL/move to the left
3735  3074          DCA TEM2/store back
3736  4172          CALL /wait for a data clk
3737  2557          WAIT
3740  7450          SNA/timeout error?
3741  5575          RETURN/yes
3742  7300          CLA CLL
3743  6500          READD /read a data bit (appears in AC's LSB)
3744  0325          AND MSK1 /and mask it off
3745  7010          RAR /put it in link
3746  7430          SZL/is it a 1?
3747  2043          ISZ PBUF/yes, coutn it in PBUF
3750  2020          ISZ CTR/no or yes, count # of bits, skip if 12_10 counted
3751  5333          JMP GET1/get another one
3752  7004          RAL/put LSB of data into bit 11
3753  1074          TAD TEM2 /add to DWA
3754  3074          DCA TEM2 /& replace
3755  7101          CLL IAC /signal no timeout error
3756  5575          RETURN
```

```
                 DIITP                    Forms a 16 bit 2's complement binary # for APU
                                 *3200    from data word
3200   0010   MASK,     10
3201   0360   MIN,      360
3202   7774   FR,       -4
3203   7621   DIITP,    CAM
3204   1303              TAD FR /set up CTR to count 4 times
3205   3020              DCA CTR
3206   1074              TAD TEM3/get data word
3207   7100   DI31,     CLL/get 4 msb's into 4 LSB's of MQ
3210   7004              RAL
3211   7521              SWP
3212   7004              RAL
3213   7521              SWP
3214   2020              ISZ CTR
3215   5207              JMP DI31
3216   7012              RTR/put 8 LSB's of data word back in place
3217   7012              RTR
3220   3074              DCA TEM3/store in TEM2, call it DATA WORD LOW
3221   7521              SWP
3222   3026              DCA TEM1/store in TEM1, call it DATA WORD HI
3223   1026              TAD TEM1
3224   0200              AND MASK/mask off sign bit
3225   7650              SNA CLA /negative?
3226   5230              JMP .+2
3227   1201              TAD MIN /its negative...fill in one's for the 8 bit APU
3230   1026              TAD TEM1/get DATA WORD HI
3231   3026              DCA TEM1/restore
3232   7100              CLL
3233   5575              RETURN

                 DIOOO

                          BLANK=3606      Enter with # to be message in AC
                          TEMD=75         exits with that # saved in TEMD
                          DIO3=3672
                          D1=24
                          D2=25
                          DIOFF=3630

                 *3234
3234   3075   DIOOO, DCA TEMD:/save AC
3235   4172    CALL:/blank display
3236   3606    BLANK:
3237   1075    TAD TEMD:/get display number
3240   1250    TAD DMIN /put all one's in first two MSD's of display
3241   3025    DCA D2:/put in D2
3242   7040    CMA:/put all 1's in last 3 MSD's of display
3243   3024    DCA D1:
3244   4172    CALL:/DIS3 puts D2-D1 onto display
3245   3672    DIO3:
3246   7200    CLA:
3247   5575    RETURN:
3250   7760   DMIN, 7760
```

```
WDWT
*3252

3252  0373  PIT, 373;
3253  0387  LD, 387;
3254  0433  VD, 433;
3255  0453  VDEW, 453
3256  4137  WDWT, W;
3257  1252   TAD PIT;
3260  4137   W;
3261  4156   I;
3262  4172   CALL;
3263  2723   TIME;
3264  4150   M;
3265  1253   TAD LD;
3266  4137   W;
3267  4150   M
3270  1254  TAD VD;
3271  4137   W;
3272  4172   CALL;
3273  3144   WCH;
3274  4156   I;
3275  1255   TAD VDEW;
3276  4142   F;
3277  5575   RETURN
```

EMT /used by DATCAL to enter $10{,}000_{10}$ and float it

```
*3765

3765  0020  THA, 20;
3766  0047  THB, 47
3767  1365  EMT, TAD THA; /write 0020_8
3770  6441   BW1;
3771  7200   CLA;
3772  1366   TAD THB;/write 0047_8
3773  6441   BW1;
3774  4200   F;/float it
3775  5575   RETURN

F=JMS FLT
FLT=164
BW1=6441
WCH=3144
W=4137
I=4156
TIME=2723
M=4150
F=4142
```

```
*SUM1
                CALL=4172
                RETURN=5575
                CHI=3761
                KYCTR=60
                K1=34
                TEM=10
                TENF=230
                CTR=20
                CTR1=22
                MINUS=31
                IKB3=6452
                WCRBB=6455
                WCRAB=6445
                BW1=6441
                TEM1=26
                REG6=343
                CONV=6014
                KEYCTR=27
                SUMT=76
                P=4142:
        AON=5440

                *3000
3000  0005  FIVE,   5
3001  0012  TEN,    12
3002  7775  TM,     -3
3003  0006  SIX,    6
3004  0343  R6,     REG6
3005  0034  K,      K1
3006  0217  TENS,   TENF-1
3007  4172  BEGIN, CALL
3010  5440          AON
3011  7200          CLA
3012  3060          DCA KYCTR
3013  1605          TAD I K
3014  7040          CMA
3015  7440          SZA
3016  7040          CMA
3017  4172          CALL
3020  3124          LDI
3021  2060  SUM1,   ISZ KYCTR
3022  1060          TAD KYCTR
3023  1205          TAD K
3024  3026          DCA TEM1
3025  1426          TAD I TEM1
3026  7040          CMA
3027  7650          SNA CLA
3030  5247          JMP SUM3
3031  1201  TAD TEN
3032  4172  CALL
3033  3124  LDI
3034  4172          CALL
3035  3140          MULI
3036  1426  TAD I TEM1
3037  4172          CALL
3040  3134          LDI
3041  4172          CALL
3042  3134          ADDI
```

```
3043  1060            TAD KYCTR
3044  1202            TAD TM
3045  7640            SZA CLA
3046  5321            JMP SUM1
3047  4164  SUM2,     JMS F
3050  1205            TAD K
3051  1203            TAD SIX
3052  3026            DCA TEM1
3053  1426            TAD I TEM1
3054  4172            CALL
3055  3124            LDS
3056  4164  JMS F
3057  1206            TAD TEN2
3060  4137  JMS WT
3061  4161  JMS D
3062  1200            TAD FIVE
3063  1205            TAD K
3064  3026            DCA TEM1
3065  1426            TAD I TEM1
3066  4172            CALL
3067  3124            LDS
3070  4164  JMS F
3071  4153  JMS A
3072  1206  TAD TEN2
3073  4137  JMS WT
3074  4161  JMS D
3075  4153  JMS A
3076  7100            CLL
3077  1031            TAD MINUS
3100  7010            RAR
3101  7620            SNL CLA
3102  5305            JMP SUM3
3103  4172            CALL
3104  3761            CAS
3105  1204  SUM3, TAD R6;
3106  4142   R;
3107  1027   TAD KEYCTR
3110  7450   INA;
3111  5575   RETURN
3112  3076   DCA SUMT;
3113  1204   TAD R6;
3114  4172   CALL;
3115  6014   CONV;
3116  1204   TAD R6;
3117  4137   JMS WT
3120  1076   TAD SUMT;
3121  3027   DCA KEYCTR;
3122  5575   RETURN
```

APU OPERATORS

```
                 *3124
3124   6441   LDI,      BW1     /take a number in the AC and load it into
3125   7200              CLA      APU as a single fixed #
3126   6441              BW1
3127   5575              RETURN
3130   0071   MCHD,     71
3131   0156   IMUL,     156
3132   0154   IADD,     154
3133   2734   BWX,      BW
3134   4172   ADDS,     CALL    /add TOS and NOS as single fixed
3135   2727              CRAB
3136   1332              TAD CADD /get ADDS code
3137   5733              JMP I BWX  /go do the command and return
3140   4172   MULI,     CALL    /multiply TOS and NOS as single fixed
3141   2727              CRAB
3142   1331              TAD IMUL
3143   5733              JMP I BWX
3144   4172   MCH,      CALL  /exchange TOS and NOS as double #'s
3145   2727              CRAB
3146   1330              TAD MCHD
3147   5733              JMP I BWX
```

LOA,B /Lights off A&B

```
                 *3151        Turns off LED's & other bits in the latcher, excep
3151   0003   L1, 3;                    LOA -  .
3152   6000    L3, 6000;                LOB - all but -,. and error lites
3153   0023   L4, 23
3154   7320   LOA, CLA ITL;/tell CHLITE to turn off L4's
3155   7421    MQL;
3156   1351    TAD L1;/turn off all but minus & decimal point
3157   4172    CALL;
3160   2516    CHLITE;/comes back with CLL
3161   7421    MQL;/turn off all of L3
3162   4172    CALL;
3163   2516    CHLITE
3164   7320   LOB, CLA ITL;/set up to turn off L4's
3165   7421    MQL;
3166   1353    TAD L4;/turn off all but LO BATT & - & .
3167   4172    CALL;
3170   2516    CHLITE;
3171   7421    MQL; /turn off L3's
3172   1352    TAD L3;/except for HI TEMP & DATA ERROR
3173   4172    CALL;
3174   2516    CHLITE;
3175   5375    RETURN

                     CHLITE=2516
```

```
                    BR1=6440

                    *2600

                    APU DRIVER ROUTINES

                    F=164;      /Arithmetic Processor Unit
            D=161;
            A=153;
            I=156;              FLT, DIVF, ADDF, SUBF, PUSH & MULF can be
            P=145;              executed with a single instruction like
            M=150;              JMS D; where D is the RAM location for a
            WT=137;             subroutine calling program loaded by INIT
            RD=142              All the rest require, e.g., CALL; POP

2600  0400  CRA,     400        Result always in TOS if a function
2601  0003  CDI,     3
2602  0035  FLTI,    35
2603  0023  FDI,    23
2604  0020  FAD,    20
2605  0007  ATAN,    7
2606  0070  FDPD,    70
2607  0056  DMUL,    56
2610  0005  ACIN,    5
2611  0021  FIU,    21
2612  0067  FTOD,    67
2613  0022  FMUL,    22
2614  0027  FIMI,    37
2615  0057  DDIV,    57
2616  0055  DSUB,    55
2617  4172  FLT,     CALL /set up APU for command
2620  2727           CRAB
2621  1202           TAD FLTI /get FLOAT code (floats a single fixed #)
2622  4172           CALL/go do the command
2623  2734           BW
2624  5564           JMP I F/exit through address stored in Page 0
2625  4172  DIVF,    CALL /divide NOS by TOS in float
2626  2727           CRAB
2627  1203           TAD FDI
2630  4172           CALL
2631  2734           BW
2632  5561           JMP I D
2633  4172  ADDF,    CALL /add TOS & NOS in float
2634  2727           CRAB
2635  1204           TAD FAD
2636  4172           CALL
2637  2734           BW
2640  5553           JMP I A
2641  4172  SUBF,    CALL/subtract TOS from NOS in float
2642  2727           CRAB
2643  1211           TAD FSU
2644  4172           CALL
2645  2734           BW
2646  5556           JMP I S
2647  4172  PUSH,    CALL/pushes TOS to NOS in float. Last variable is lost.
2650  2727           CRAB
2651  1212           TAD FTOD
2652  4172           CALL
2653  2734           BW
2654  5545           JMP I P
```

```
2655  4172  ARTAN,  CALL /set up APU for commands
2656  2727          CRAB
2657  1205          TAD ATAN/get code for Arc tangent
2660  5334          JMP BW/exit thru BW
2661  4172  POP,    CALL/pop NOS to TOS in double precision
2662  2727          CRAB
2663  1206          TAD POPD
2664  5334          JMP BW
2665  4172  MULF,   CALL/multiply TOSxNOS in float
2666  2727          CRAB
2667  1213          TAD FMUL
2670  4172          CALL
2671  2734          BW
2672  5550          JMP I M
2673  4172  MULD,   CALL /multiply TOSxNOS in double prec. integer
2674  2727          CRAB
2675  1207          TAD DMUL
2676  5334          JMP BW
2677  4172  ARSIN,  CALL/do Arc sin in float
2700  2727          CRAB
2701  1210          TAD ASIN
2702  5334          JMP BW
2703  4172  SQRT,   CALL/do SQRT of TOS
2704  2727          CRAB
2705  7001          IAC/code for SQRT
2706  5334          JMP BW
2707  4172  FIX,    CALL/FIX the TOS from foalt to single precision
2710  2727          CRAB
2711  1214          TAD FIXS
2712  5334          JMP BW
2713  4172  DIVD,   CALL/divide NOS by TOS in double prec. integer
2714  2727          CRAB
2715  1215          TAD DDIV
2716  5334          JMP BW
2717  4172  SUBD,   CALL/subtract TOS from NOS in double prec. integer
2720  2727          CRAB
2721  1216          TAD DSUB
2722  5334          JMP BW
2723  4172  SINE,   CALL/do SINE of TOS
2724  2727          CRAB
2725  7305          CLA CLL IAC RAL
2726  5334          JMP BW
```

```
3727  7200  CRAB,    CLA /set up APU for command
3730  1300           TAD CRA/get code for FLAG1 on, all else off
3731  6445           WCRAB /write CRA of PIE B
3732  7200           CLA
3733  5575           RETURN
3734  6441  BW,      BW1/do the command
3735  6452           SKP3 /(or B53) wait for APU to do it
3736  5335           JMP .-1
3737  7200           CLA
3740  6445           WCRAB /reset PIE B for APU "DATA"
3741  5575           RETURN                                        1st byte of
3742  3010  WTAPUF,  DCA TEM /call WTAPUF by doing JMS 0137, AC=(floating # to be)
3743  6445           WCRAB /set up APU for "DATA"                  written into APU
3744  1376           TAD FM/count 4 things
3745  3022           DCA CTR1                                   arranged:
3746  1410  W1,      TAD I TEM /get 1st (or next) of 4 bytes (  1 LSB; 2--; 3--;)
3747  6441           BW1                                         4 MSB
3750  7200           CLA
3751  2022           ISZ CTR1/done 4 bytes?                     each byte:
3752  5346           JMP W1/no                                  000/00xx/xxx/xxx
3753  5537           JMP I WT/yes; exit via zero page           b0  b11
3754  7001  RDAPUF,  IAC/call RDAPUF:JMS0142
3755  3026           DCA TEM1/enter with AC=(1st byte of destination for TOS)-1
3756  6445           WCRAB /set up "DATA" for APU
3757  1376           TAD FM/count 4 things
3760  3022           DCA CTR1
3761  1026           TAD TEM1
3762  1201           TAD CDI/add 3 to address, since data comes off MSB 1st from T
3763  3026           DCA TEM1/store back in TEM1
3764  6440  R1,      BR1/1st BR1 gets up APU fo read,but puts garbage in AC
3765  7200           CLA
3766  6440           BR1/2nd BR1 actually reads it
3767  3426           DCA I TEM1/store in destination
3770  1026           TAD TEM1/decrement address pointer
3771  1377           TAD ONM
3772  3026           DCA TEM1/replace
3773  2022           ISZ CTR1/4 times?
3774  5364           JMP R1/no
3775  5543           JMP I RD/yes, exit thru RAM
3776  7774  FM,      -4
3777  7777  ONM,     -1
```

BLANK AND DISPR

```
                                WCRAA=6425
                                LOM1=4622
                                AW2=6431
                                CALL=4172
                                RETURN=5575
                                *20
0020  0000  CTR,                0
0021  0000  L4R,                0
0022  0000  CTR1,               0
0023  0000  AC,                 0
0024  0000  DISPR1,             0
0025  0000  DISPR2,             0
0026  0000  TEM1,               0
0027  0000  KEYCTR,             0
                                *3600
3600  1400  L4,                 1400
3601  0400  L2,                 0400
3602  0000  L1,                 0000
3603  7774  DP,                 7774
3604  7773  DP1,                -5
3605  7772  DP2,                -6
3606  7200  BLANK,              CLA
3607  3027          DCA KEYCTR
3610  7040          CMA
3611  3024          DCA DISPR1
3612  7040          CMA
3613  3025          DCA DISPR2
3614  4172          CALL
3615  3673          DIS3
3616  7000          NOP
3617  7200                    CLA
3620  1200                    TAD L4
3621  6425                    WCRAA
3622  7300                    CLA CLL
3623  1021                    TAD L4R
3624  0203                    AND DP
3625  6431                    AW2
3626  3021          DCA L4R
3627  5575                    RETURN
3630  3023  DISPR,            DCA AC
3631  7004                    RAL
3632  3026                    DCA TEM1
3633  1027                    TAD KEYCTR
3634  1204                    TAD DP1
3635  7650                    SNA CLA
3636  5310                    JMP KEY5
3637  1027                    TAD KEYCTR
3640  1205          TAD DP2
3641  7650                    SNA CLA
3642  5317                    JMP KEY6
3643  1025  DIS1,             TAD DISPR2
3644  7421                    MQL
3645  1203                    TAD DP
3646  3022                    DCA CTR1
3647  1024                    TAD DISPR1
```

```
3650  7104  DIS2,          CLL RAL
3651  7521                SWP
3652  7004                RAL
3653  7521                SWP
3654  3022                ISZ CTR1
3655  5250                JMP DIS2
3656  1023                TAD AC
3657  3024                DCA DISPR1
3660  7521                SWP
3661  3025                DCA DISPR2
3662  1026                TAD TEM1
3663  7650                SNA CLA
3664  5272                JMP DIS3
3665  7305                CLA CLL IAC RAL
3666  4172          CALL
3667  4622          LON1
3670  3026          DCA TEM1
3671  5243                JMP DIS1
3672  1201  DIS3,         TAD L2
3673  6425                WCRAA
3674  7200                CLA
3675  1025                TAD DISPR2
3676  6431                AWB
3677  7200                CLA
3700  1202                TAD L1
3701  6425                WCRAA
3702  7200                CLA
3703  1024                TAD DISPR1
3704  6431                AWB
3705  7300                CLA CLL
3706  1023                TAD AC
3707  5573                RETURN
3710  7100  KEY5,         CLL
3711  1023          TAD AC
3712  7006                RTL
3713  7006                RTL
3714  1024  DIS4,         TAD DISPR1
3715  3024                DCA DISPR1
3716  5272                JMP DIS3
3717  1023  KEY6,         TAD AC
3720  5314                JMP DIS4
```

```
              *3757
```

CHS

```
              CRAB=2727
```

CHange Sign

```
3757  2734  BW1,    2734    /ROM ADR OF BW
3760  0025  CHIF,   25
3761  4172  CHI,    CALL
3762  2727          CRAB
3763  1360          TAD CHIF
3764  5757          JMP I BW1
```

ANGA ANGE SYMBOL TABLE

```
A         4153
ANG       5355
ANGA      3314
ANGE      3233
ANGF      3251
AN1       3230
CALL      4173
CHI       3761
D         4161
KEYCTR    0027
P         4145
PF        3278
PI        6144
POF       3257
POOF      5474
POP       2661
RETURN    5575
S         4156
STATUS    4347
TEMB      0051
W         4137

 PC003241 MD5314 A0000 L1 D0
>32002 7002
>C
```

```
/ANGA, ANGE
```

/ANGA takes an angle in radians, converts to 0-2π radians, then gets ANG to display it in degrees

```
CALL=4173;
 RETURN=5575;
 W=4137;
 P=4145;
 STATUS=4347;
 PI=6144
 A=4153;
 ANG=5355;
 D=4161;
 S=4156;
 CHI=3761;
 TEMB=51;
 POP=2661
 POOF=5474;
 KEYCTR=27
```

/ANGE-see next page

```
 ◆3314
3314  4137  ANGA, W;/write the value
3315  4145   P;/save
3316  4173   CALL;/+ or -?
3317  4347   STATUS;
3320  7650   INF CLA;/1 if minus; 0 if plus
3321  5230   JMF AN1;
3322  4173   CALL; /-, add 2π then display it
3323  6144   PI;
3324  4173   CALL;
3325  6144   PI;
3326  4153   A;
3327  4153   A
3330  4173  AN1, CALL; /+, its OK - display it
3331  5356   ANG+1;
3332  5575   RETURN
```

```
                        /ANGE adjusts a number input by the keyboard so it is in
                         -π< a <π form in TOS
0233  4181  ANGE, D; / ÷ iso/π
0234  4145   P; /save it
0235  4172   CALL;/see which hemisphere it's in by subtracting PI & checking sign
0236  6144   PI;
0237  4156   S;
0240  4172   CALL;
0241  4347   STATUS;
0242  7640   SZA CLA;/0 if pos, 1 if neg
0243  5251   JMP ANGP/OK do it
0244  4172   CALL;/needs to have π subtracted so answer is -π< x <π
0245  6144   PI;
0246  4156   S;
0247  3051   DCA TEM8;/clear TEM8, which indicates 'ANGLE'
0250  5575   RETURN
0251  4172  ANGP, CALL; /get answer on TOS
0252  2661   POP;
0253  3051   DCA TEM8;/clear TEM8
0254  5575   RETURN

            POF        *0257  POF/point 00five used by convert to avoid round
0257  4137  POF, W; /write #                    up/down error in CONN
0260  4145   P; /save
0261  4172   CALL; /tor-?
0262  4347   STATUS;
0263  7421   MQL;/save answer in MQ
0264  1276   TAD PF;/write .005
0265  4137   W;
0266  7501   MQA;/look at MQ
0267  7650   SNA CLA;/1 if # neg, 0 if # was pos
0270  5273   JMP .+3;/pos, get add .005
0271  4172   CALL;/neg, subtr .005
0272  3761   CHI;
0273  4153   A
0274  3027   DCA KEYCTR;/zeroize KEYCTR
0275  5575   RETURN
0276  5473  PF, POOF-1/address of floating .005
```

ACC

```
                        CALL=4172
                        RETURN=5575
                        LOM1=4622
                        WCPPA=6425
                        AWB=6431
                        KPEOB=6433
                        KYBLK=6554
                        AR3=6430
                        DUM=3007
                        I IPR=3630
                        BLANK=3606
                        KEYCTR=27
                        L4R=21
                        AC=23

                        *23
0030  0000  JMPR,      0
0031  0000  MINUS,     0
0032  0000  DONEF,     0
0033  0000  KEYT,      0
0034  0000  K1,        0
0035  0000  K2,        0
0036  0000  K3,        0
0037  0000  K4,        0
0040  0000  K5,        0
0041  0000  K6,        0
0042  0000  K7,        0

                        *3300

3300  0005  FIV,       5
3301  7773  FIVE,      -5
3302  0034  K,         K1
3303  3540  A1,         ACCA
3304  7774  FOUR,      -4
3305  7771  SEVEN,     -7
3306  1400  L4,        1400
3307  1038  ACC4,      TAD DONEF
3310  7640              SZA CLA
3311  5703              JMP I A1
3312  1023              TAD AC
3313  7100              CLL
3314  4172              CALL
3315  3630              DICPP
3316  7200              CLA
3317  1027              TAD KEYCTR
3320  1302              TAD K
3321  3030              DCA JMPR
3322  1023              TAD AC
3323  3430              DCA I JMPR
3324  2027              ISZ KEYCTR
3325  1027              TAD KEYCTR
3326  1304              TAD FOUR
3327  7650              SNA CLA
3330  5336              JMP ACC1
3331  1027              TAD KEYCTR
3332  1305              TAD SEVEN
3333  7640              SZA CLA
3334  5703              JMP I A1
3335  5351              JMP ACC2
```

```
3336  1306  ACC1,   TAD L4
3337  6429          WCRAA
3340  7201          CLA IAC
3341  7040          CMA
3342  0021          AND L4R
3343  6431          RWB
3344  3021          DCA L4R
3345  7330          CLA CTL RAR
3346  3031          DCA MINUC
3347  7120          STL
3350  5357          JMP ACC5
3351  2032  ACC2,   ISZ DONEF
3352  5703          JMP I A1
3353  1027  ACC3,   TAD KEYCTR
3354  1301          TAD FIVE
3355  7820          SNL CLA
3356  5703          JMP I A1
3357  4172  ACC5,   CALL
3360  3630          DISPR
3361  3032          DCA DONEF
3362  1300          TAD FIV
3363  3027          DCA KEYCTR
3364  5703          JMP I A1

                    *3400
3400  7773  FIVM,   -5
3401  3501  KB,     KEYB
3402  0017  ACCMK,  17
3403  3353  A,      ACC3
3404  3307  A4,     ACC4
3405  1400  L4A,    1400
3406  5356  KY0,    JMP ACCC
3407  1311  KY1,    TAD KY1+3
3410  5356          JMP ACCC
3411  0001          1
3412  1314  KY2,    TAD KY2+3
3413  5356          JMP ACCC
3414  0002          2
3415  1317  KY3,    TAD KY3+3
3416  5356          JMP ACCC
3417  0003          3
3420  1322  KY4,    TAD KY4+3
3421  5356          JMP ACCC
3422  0004          4
3423  1325  KY5,    TAD KY5+3
3424  5356          JMP ACCC
3425  0005          5
3426  1330  KY6,    TAD KY6+3
3427  5356          JMP ACCC
3430  0006          6
3431  1333  KY7,    TAD KY7+3
3432  5356          JMP ACCC
3433  0007          7
3434  1336  KY8,    TAD KY8+3
3435  5356          JMP ACCC
3436  0010          10
3437  1341  KY9,     TAD KY9+3
3440  5356          JMP ACCC
3441  0011          11
```

```
3442  7120  KYP,     ITL
3443  5356           JMP ACCC
3444  1031  KYM,     TAD MINUS
3445  7710           SPA CLA
3446  5340           JMP ACCA
3447  2031           ISZ MINUS
3450  1205           TAD L4A
3451  6425           WCRAA
3452  7200           CLA
3453  1031           TAD MINUS
3454  7012           RTR
3455  7700           SMA CLA
3456  5263           JMP KYM1
3457  7001           IAC
3460  4172           CALL
3461  4622           LON1
3462  5340           JMP ACCA
3463  7201  KYM1,    CLA IAC
3464  7040           CMA
3465  0021           AND L4R
3466  6431           RWB
3467  3021           DCA L4R
3470  5340           JMP ACCA
3471  4172  KYC,     CALL
3472  3606           BLANK
3473  5333           JMP ACC6
3474  4172  KYE,     CALL
3475  3007           IUM
3476  5575           RETURN
3477  5340  KYD,     JMP ACCA
3500  5340  KYG,     JMP ACCA
3501  5242  KEYB,    JMP KYP
3502  5234           JMP KY8
3503  5220           JMP KY4
3504  5271           JMP KYC
3505  5244           JMP KYM
3506  5223           JMP KY5
3507  5207           JMP KY1
3510  5277           JMP KYD
3511  5237           JMP KY9
3512  5226           JMP KY6
3513  5212           JMP KY2
3514  5274           JMP KYE
3515  5206           JMP KY0
3516  5231           JMP KY7
3517  5215           JMP KY3
3520  5200           JMP KY0
```

```
3521  6433  ACC,    KFED3
3522  7300          CLA CLL
3523  3031  ACCB,   DCA MINUC
3524  3027          DCA KEYCTR
3525  3032          DCA DONEF
3526  3041          DCA K6
3527  3042          DCA K7
3530  7040          CMA
3531  3034          DCA K1
3532  7040          CMA
3533  3035          DCA K2
3534  7040          CMA
3535  3036          DCA K3
3536  7040          CMA
3537  3037          DCA K4
3540  6433  ACCA,   KFED3
3541  5340          JMP .-1
3542  7000          NOP
3543  7000          NOP
3544  7000          NOP
3545  7000          NOP
3546  7000          NOP
3547  7000          NOP
3550  7100  OUT,    CLL
3551  6430          AFB
3552  0203          AND ACCMK
3553  1201          TAD KB
3554  3030          DCA JMFB
3555  5762          JMP I KBK /go write ou what KYBLK is
3556  3033  ACCC,   DCA AC
3557  7630          ICL CLA
3560  5603          JMP I A
3561  5604          JMP I A4
3562  6554  KBK,    KYBLK
```

LIW /Least Significant Word

*3365 takes LWS of a floating # & displays it

```
3365  0017  MSK, 17;
3366  0224  FG1, FEG1;
3367  0223  FG1M, FEG1-1
3370  1367  LIW, TAD FG1M;/get TOS into scratchpad
3371  4142   JMS FD;
3372  1766   TAD I FG1;/get LSW
3373  0365   AND MSK;/mask off least significant 4 bits
3374  4172   CALL;/display them as a decimal #, using DISPR.  DISPR pushes the
3375  3630   DICF#;    displayed #'s to the left to make room for the new one.
3376  7200   CLA;
3377  5575   FETLAM

             ITATUC=4347;
             FEG1=224;
             FD=142
```

```
                 CONOE    /from CON time Or Enter
                 *5700
                 TEM10=54; /holds program and flashes the lights to let operator hand
                 KRB=6433;
                 ARB=6430; /any errors: pressing DISP shown the last message code
                 TEMD=75;   displayed (if "2", no errors), pressing CON will not acce
                 DISCO=3334; the current parameters.  ENT does accept them.  Must
                 BLANK=3606; enter with TEMN=0, exits with TEMN=1 if CLR/CONT presse
                 LOA=3154;                                        0 if ENT pressed
                 CHAR1=63
                 CALL=4172;
                 RETURN=5575;
                 TEMN=101;
                 LON1=4622
5700  7775       CNT, -3;
5701  7771       DSP, -7;
5702  0017       MK, 17;
5703  7765       ENT, -13
5704  1343       CONOE, TAD FLSH;/flash all the lights
5705  4172        CALL;
5706  4622        LON1
5707  6433       CN1, KRB;/wait for a KBR
5710  5307        JMP .-1;
5711  6430        ARB; /read & mask it
5712  0302        AND MK;
5713  3063        DCA CHAR1; /and store in CHAR1
5714  1063        TAD CHAR1;
5715  1300        TAD CNT;/is it CLR/CONT?
5716  7640        SZA CLA
5717  5326        JMP CN2;/no, try again
5720  2101        ISZ TEMN;/yes, indicate such in TEMN
5721  4172       0, CALL;/blank display
5722  3606        BLANK;
5723  4172        CALL; /turn off lights
5724  3154        LOA;
5725  5575        RETURN
5726  1063       CN2, TAD CHAR1;
5727  1301        TAD DSP;/is it DISP?
5730  7640        SZA CLA;
5731  5336        JMP CN3;/no, try again
5732  1075        TAD TEMD;/fetch the last displayed message
5733  4172        CALL; /and display it
5734  3334        DISCO;
5735  5307        JMP CN1/wait for another keystroke
5736  1063       CN3, TAD CHAR1;
5737  1303        TAD ENT;/is it ENTER?
5740  7640        SZA CLA;
5741  5307        JMP CN1;/no, illegal entry.  Ignore & start over
5742  5331        JMP 0 /yes, exit with TEMN=0
5743  0010       FLSH, 10
```

```
          DIPCAL   /calculates DIP angle
          PIA1=2305;
          PBUF=43;
          KEYT=33;
          DATCAL=4250;
          ARTAN=2655;
          REG4=527;
          ANG=5355;
          SQRT=2703
          STATUS=4347;
          W=4137;
          R=4142;
          P=4145;
          M=4150;
          A=4153;
          D=4161;
          YCOS=243
          XCOS=253;
          ZCOS=247
          ◆5745
5745  0243  Y, YCOS;
5746  0253  X, XCOS;
5747  0247  ZC, ZCOS;
5750  0527  P4, REG4
5751  1345  DIPCAL, TAD Y;/write Y cos
5752  4137   W;
5753  4145   P;
5754  4150   M;/YCOS^2
5755  1347   TAD ZC
5756  4137   W;
5757  4145   P;
5760  4150   M;/ZCOS^2
5761  4153   A;/YCOS^2+ZCOS^2
5762  4172   CALL;
5763  2703   SQRT;/√(YCOS^2+ZCOS^2)
5764  1346   TAD X;
5765  4137   W;
5766  4161   D;/XCOS÷√(YCOS^2+ZCOS^2)
5767  4172   CALL;
5770  2655   ARTAN /tan^-1(YCOS÷√(YCOS^2+ZCOS^2))=dip angle
5771  1350   TAD P4;/put in REG4
5772  4142   R;
5773  1350   TAD P4;/display REG4 as a -180<x<180 angle
5774  4172   CALL;
5775  5355   ANG;
5776  5575   RETURN
```

```
                GTIN        /sequences throu intitial conditions necessary
                CALL=4172;
                RETURN=5575;
                M=4710;
                L=4732;
                LOA=3154;
                E=4664
                GETIN=4463;
                MAIN2=6620;
                ILEN=4703
                *5400
5400  4172      GTIN, CALL;/lights off
5401  3154       LOA;
5402  4172       CALL;/go to BRTAB to handle INITIAL BER input
5403  4732       L;
5404  4172       CALL;/lights off
5405  3154       LOA;
5406  4172       CALL;/go to BRTAB to handle INITIAL INC input
5407  4710       M
5410  4172       CALL;/lights off
5411  3154       LOA;
5412  4172       CALL;/go to BRTAB to handle INITIAL ROD input
5413  4664       E;
5414  4172      GTIN1, CALL;/lights off
5415  3154       LOA;
5416  4172       CALL;/go to BRTAB to handle INITIAL SLEW input
5417  4703       ILEN;
5420  5266       JMP EXTEN;/patch to EXTEN (5466)
5421  6620       MAIN2 /unnecessary

                M2EX        /MAIN2 EXTENDED
                EXEC=5011;
                PROC2=4023;
                M4=6640;
                MAIN2=6620;
                TEM13=57;
                TEM11=55

5422  7040      M2EX, CMA;/disallow continue
5423  3057       DCA TEM13;
5424  4172       CALL;/wait for new data or "AR","ENTER"
5425  5011       EXEC;
5426  1055       TAD TEM11/what was it?
5427  7700       SMA CLA;
5430  5637       JMP I MN4;/new data, go back to M4
5431  4172       CALL;/AR ENTER
5432  5440       ADM;
5433  4172       CALL;/get the PROC2 values
5434  4023       PROC2
5435  5636       JMP I MN2/go back to MAIN2
5436  6620      MN2, MAIN2;
5437  6640      MN4, M4
```

```
·DATCAL

DIC3=3476;
DICPR2=29;
BLANK=3606;
DICPR=3637;
SUBD=2717;
FIX=2707
MULD=3673;
MINUC=31;
DIVD=2713;
REG1=224;
CALL=4172;
RETURN=5575
TEM3=11;
TEM4=12;
TEM=10;
TEM1=26;
BW1=6441;
WT=137;
RD=142;
SUBF=156;
LCN=4620
PUSH=145;
ADDF=153;
MULF=150;
CHI=3761;
FLT=164;
CFBB=2737;
BR1=6440;
CHLITE=2516
POP=3661;
STACK=175;
DIVF=161;
SORT=2703;
CTR=20;
CTR1=22;
XCH=3144;
LDI=3124
ADDI=3134;
MULI=3140;
CTR2=42;
REG2=230;
BW=2734;
NEXCTR=27;
NORM=2341
ICDATA=6305;
CHEK=6536;
ENT=3767;
RBAT=6520;
TEMS=6516;
FAULT=5453
```

```
                        *4300

4200  0277  REF,     277
4201  0174  AW1,     174      /YCOS
4202  0010           10
4203  0360  AM1,     360
4204  0330           330
4205  0071  AW2,     71       /ZCOS
4206  0377           377
4207  0331  AM2,     331
4210  0046           046
4211  0210  AW3,     210      /XCOS
4212  0002           2
4213  0367  AM3,     367
4214  0046           46
4215  0043  AW4,     43       /GGX (CHANGE SIGN)
4216  0000           0
4217  0014  AM4,     14
4220  0333           333
4221  0043  AW5,     43       /GGZ
4222  0000           00
4223  0020  AM5,     20
4224  0047           47
4225  0042  AW6,     42       /GGY (CHANGE SIGN)
4226  0000           0
4227  0047  AM6,     47
4230  0331           331
4231  7772  SM,      -6
4232  4200  AW,      AW1-1
4233  0243  DATL,    243
4234  7774  FM,      -4
4235  0273  TEMP,    273/downhole temperature
4236  0004  TEML, 4     /temperature limit, high end
4237  0040  MASK,    40
4240  4237  TPFA,    TPFA-1   /2.47 /reference voltage check
4241  6424           6424
4242  6636           6636
4243  6402           6402
4244  4243  TPA,     TPA-1    /.05
4245  6714           6714
4246  6714           6714
4247  6574           6574

4250  4172  DATCAL, CALL /scale the data
4251  6305           SCDATA
4252  1240           TAD TPFA/check reference voltage
4253  4137           JMS WT
4254  1200           TAD REF
4255  4137           JMS WT
4256  4156           JMS SUBF/APUTOS has 2.47-REF
4257  4172           CALL
4260  4347           STATUS
4261  7650           SNA CLA /negative?
4262  5265           JMP .+3 /no, skip ahead to 4265
4263  4172           CALL/yes, falut
4264  5452           FAULT
4265  1244           TAD TPA /subtract .05 from the remainder
4266  4137           JMS WT
4267  4156           JMS SUBF
4270  4172           CALL
```

NEEDS WORK

DATCAL DOES:

$$\frac{(\text{Data Word})\times 10000-AW}{AM} \longrightarrow \text{data}$$

CHANGED THE VALUES

```
4271  4347            STATUS
4272  7640            SZA CLA/positive?
4273  5276            JMP .+3/no, OK
4274  4172            CALL/yes, 247-rd-.05 was >0
4275  5452            FAULT/fault displays "9" & waits for a go-ahead from KBR
4276  1235            TAD TEMF/check for interrupt, load APU with temp. word
4277  4137            JMS WT
4300  1236            TAD TEML/load temperature limit (4.0 is 40°C)
4301  4172            CALL
4302  3184            LDS
4303  4184            JMS FLT /should be a JMS SUBF here
4304  4172            CALL</check if negative: 0 is x>0, 1 is x<0
4305  4347            STATUS
4306  7650            SNA CLA<——should be SZA CLA
4307  5312            JMP DAT2
4310  4172            CALL/temperature error—TEME sets HI TEMP light & puts 7777₈
4311  6526            TEME/into TEMD and 0001₈ into TEMD( 0100)
4312  1343  DAT2,     TAD BATN/get addr of neg batt voltage
4313  4137            JMS WT/write it
4314  4172            CALL/change sign
4315  3761            CMA
4316  1240            TAD TFFA/write 2.5
4317  4137            JMS WT
4320  4156            JMS SUBF/get BATN-2.5V
4321  4172            CALL/CHEK sets Lo Bat light & puts 1 into TEMP(0100) if error
4322  6536            CHEK
4323  1344            TAD BATP/write postive battery voltage
4324  4137            JMS WT
4325  1240            TAD TFFA/write 2.5V
4326  4137            JMS WT
4327  4156            JMS SUBF/get Bat p-2.5
4330  4172            CALL/CHEK sets Lo Bat light & puts 1 into TEMP(0100) if error
4331  6536            CHEK
4332  4172            CALL/check receiver battery; if OK, return; if not OK
4333  6520            RBAT/set LO BATT lite & put 1 into TEMP(0100)
4334  1231            TAD IM/load CTR2 to count 6
4335  3042            DCA CTR2
4336  1232            TAD AW/set TEM3 to point to data coefficients AV1-> AM6
4337  3011            DCA TEM3
4340  1233            TAD DATL/set AC to point to 1st data word
4341  5742            JMP I .+1
4342  4401            DAT1/end of DATCAL is located at 4401
4343  0303  BATN,     303
4344  0307  BATP,     307
4345  7775  TM,       -3
```

STATUS /checks APU TOS & exits: AC=0 if positive, AC=1 if negative

```
      *4346
4346  0100  MAK,    100
4347  4172  STATUS, CALL/get status word from APU
4350  3727            CRAB
4351  6440            BF1
4352  7200            CLA
4353  6440            BF1
4354  0346            AND MAK/mask sign info  0=positive 1=negative
4355  5575            RETURN
```

```
                 /COM        /COMPARE - works out data limits & determines if out of lim

                 I=4156;
                 W=4137;
                 TEMP=53
4356  4137       COM, W;/write 2nd parameter
4357  4156        I;/param 1 - param 2
4360  4172        CALL;/get absolute value
4361  4347        STATUS;
4362  7650        SNA CLA;
4363  5575        RETURN;/done - its positive
4364  4172        CALL;/change sign - its negative
4365  3761        CMA;
4366  5575        RETURN/done

                 /COM1

4367  4137       COM1, W;/subtract limit from parameter difference
4370  4156        I;
4371  4172        CALL;
4372  4347        STATUS;
4373  7640        SZA CLA;/error? (result of line 4370 will be neg if limit was bigg
4374  5575        RETURN;/no                                  than difference, i.e., OK)
4375  2053        ISZ TEMP; /yes, signal TEMP
4376  5575        RETURN

                 /DAT1       *4400   /DATCAL EXTENDED - does (data word)x10000-AV / AM
4400  7774       TMD,      -4
4401  3010       DAT1, DCA TEM/put start of data into TEM
4402  1010       DATX, TAD TEM
4403  4137             JMS WT/write data word
4404  4172             CALL/enter 10,000
4405  3767             ENT
4406  4150             JMS MULF/multiply
4407  4172             CALL/load & float 1st (next) coefficient (AV)
4410  4436             DOOB
4411  4156             JMS SUBF/subtract
4412  4172             CALL/load & float 2nd (next) coefficient (AM)
4413  4436             DOOB
4414  4151             JMS DIVF/divide
4415  1010             TAD TEM /point back to
4416  1200             TAD TMD /beginning of this word
4417  4142             JMS RD/replace if with adjusted value
4420  2042             ISZ CTR3 /done it 6 times?
4421  5302             JMP DATX /no, do it again
4422  1235             TAD DTL/yes, make AC point to beginning of data
4423  4172             CALL/normalize the data
4424  6570             NRMCAL
4425  5575             RETURN

4426  1411       DOOB,     TAD I TEMB /loads & floats # pointed to by TEMB
4427  6441             BWI
4430  7200             CLA
4431  1411             TAD I TEMB
4432  6441             BWI
4433  4164       JMS FLT
4434  5575             RETURN
4435  0243       DTL,      243
                         NRMCAL=6570
```

```
                REITART                 /sequence thru what values are necessary to put
                CALL=4172;               computer at an old position in the borehole;
                RETURN=5575;             will fill in value for BER1; INC1; SLEW; LAT;
                L=4732;                  DEP & Vertical Depth
                M=4710;
                H=4703;
                B=4645;
                K=4725;
                G=4676
                CTR4=73;
                TEMS=45;
                LOA=3154;
                LON=4620;
                LON1=4622;
                TEM8=51;
                D=4657
                *5125
5125  1000      PLT, 1000;
5126  0507      BNG, 507;/BER2 (not used)
5127  0513      INCL, 513;/INC2 (not used)
5130  0403      ILE, 403;
5131  0413      LAT1, 413;
5132  0423      DPT, 423;
5133  0433      VDD, 433
5134  4732      LK, L;/BER1
5135  4710      IK, M;/INC1
5136  4703      HK, H;/SLEW
5137  4645      BK, B;/LAT
5140  4725      KK, K;/DEP
5141  4676      GK, G;/VD
5142  5133      LKA, LK-1
5143  5161      RON, RIT1;
5144  4172       CALL;
5145  5464       JMP I 64;
5146  7771      IM, -7
5147  1346      RIT, TAD IM;/6 parameters (put LSZ CET4 in such a place that it
5150  3072       DCA CTR4;                 needs to count to 7)
5151  1342       TAD LKA;/start with BER address in BRTAB
5152  3011       DCA 11;/put in autoindex
5153  1343       TAD RON;/set up call routine in RAM
5154  3064       DCA 64;
5155  1344       TAD RON+1;
5156  3065       DCA 65
5157  1345       TAD RON+2;
5160  3067       DCA 67
5161  4172      RIT1, CALL;/lights off
5162  3154       LOA;
5163  1335       TAD PLT;/turn on "RS" light
5164  4172       CALL;
5165  4622       LON1;
5166  7046       JMP PTL;
5167  7006       PTL;
5170  3045       DCA TEMS;/signal "INITIAL" to KYSR (TEMS>0) AC=7767 L=1 and INC1,BER1
5171  1411       TAD I 11
5172  3066       DCA 66;
5173  2072       ISZ CTR4;
5174  5065       JMP 65;
5175  4172       CALL; /all done/turn off lights
5176  3154      XXXXXX JMP I+1 (5776)
5177  5575      XXXXXX 6440
```

```
                    BRTBE        BRANCH TABLE
            TEM7=50;
            CHLITE=3516;
            CALL=4172;
            RETURN=5575;
            TEM6=46;
            TEM8=51;
            TEM5=45;
            KYSR=5611
            KYSRC=5647;
            KYSR2=5631
            *4600
4600  5240  DIP, JMP A;/branch table
4601  5245  LAT, JMP B;
4602  5765  TEST, JMP I KR;/ignore, start over at KYSR (5611)
4603  5766  INIT, JMP I K2;/initial into service with KYSR2 (5631)
4604  5252  VIEW, JMP C;
4605  5257  THD, JMP D
4606  5765  ADRD, JMP I KR;/ignore, start over at KYSR (5611)
4607  5264  ROD, JMP E;
4610  5271  LDEV, JMP F;
4611  5276  VD, JMP G;
4612  5303  CLEN, JMP H;
4613  5310  INC, JMP M
4614  5320  SOT, JMP J;
4615  5325  DEP, JMP K;
4616  5765  RI, JMP I KR;/ignore
4617  5332  BER, JMP L
4620  7100  LON, CLL;
4621  7410   IAC;
4622  7120  LON1, RTL;
4623  7421   MQL;
4624  7501   MQA;
4625  4172   CALL;
4626  3516   CHLITE;
4627  5575   RETURN
4630  3046  ANGL, DCA TEM6;/put value in TEM6
4631  7040   CMA;/signal it's an angle by putting somethin in TEM8
4632  3051   DCA TEM8;
4633  5764   JMP I KC /back to KYSR to finish (5647)
4634  3046  END, DCA TEM6;/put value in TEM6
4635  3051   DCA TEM8;/clear TEM8
4636  5764    JMP I KC /back to KYSR to finish (5647)
```

call LON writes an L1 LED latch with contents of AC

call LON1 writes an L2 LED latch with contents of AC

```
                 *4640
4640   7001   A, IAC RTL;/turn on DIP light
4641   4172    CALL;
4642   4620    LON;
4643   1346    TAD DP;/get addr of DIP
4644   5230    JMP ANGL/exit (angle)
4645   1342   B, TAD LTL;/turn on LAT light
4646   4172    CALL;
4647   4622    LON1;
4650   1347    TAD LT;/get addr of LAT
4651   5234    JMP END/exit
4652   1350   C, TAD VV;/turn on V DEVIATION
4653   4172    CALL;
4654   4620    LON;
4655   1351    TAD VDE;/get addr of VDEV
4656   5234    JMP END
4657   1345   D, TAD THDL;/turn on THD
4660   4172    CALL;
4661   4622    LON1;
4662   1352    TAD TH;/get addr of THD
4663   5234    JMP END/exit
4664   1374   E, TAD RDL;/turn on ROD
4665   4172    CALL;
4666   4620    LON;
4667   1354    TAD RD;/get addr of ROD
4670   5234    JMP END/exit
4671   1355   F, TAD LD;/turn on HOR DEVIATION
4672   4172    CALL;
4673   4620    LON;
4674   1356    TAD LV;/get contents of LDEV
4675   5234    JMP END/exit
4676   1344   G, TAD VDL;/turn on VD (vertical depth)
4677   4172    CALL;
4700   4622    LON1;
4701   1357    TAD VDE;/get contents of VD
4702   5234    JMP END/exit
4703   1360   H, TAD SL;/turn on string length
4704   4172    CALL;
4705   4620    LON;
4706   1361    TAD STE;/get contents of SLEW
4707   5234    JMP END/exit
4710   7105   M, CLL IAC RAL;/turn on INCLINATION
4711   4172    CALL;
4712   4620    LON;
4713   1045    TAD TEM5;/"INITIAL"
4714   7440    SZA;/DO NOT CLA
4715   1362    TAD TM;/yes, subtract 16_10(if "INITIAL" TEM5=-1) or 24_10(if RESTART
4716   1363    TAD AVI;/no, just load     TEM5=9 DOES THIS) from AVI (addr of AVINC)
4717   5230    JMP ANGL/exit  AVI -> AC(addr  to make it addr AINC or INC1
4720   1367   J, TAD RT;/turn on ROTATION light
4721   4172    CALL;
4722   4620    LON;
4723   1370    TAD RTA;/get addr of ROT
4724   5230    JMP ANGL/exit (angle)
4725   1343   K, TAD DPL;/turn on DEPARTURE light
4726   4172    CALL;
4727   4622    LON1;
4730   1371    TAD DE;/get addr of DEP
4731   5234    JMP END/exit
```

```
4732  1372  L, TAD BR;/turn on BEARING light
4733  4172   CALL;
4734  4620   LOM;
4735  1045   TAD TEM5;/"INITIAL" pressed?
4736  7440   SZA;/do not CLA
4737  1362   TAD TM;/yes,subtr 16₁₀(if "INITIAL" TEM5=-1) or 24₁₀(if RESTART TEM5
4740  1373   TAD AWB;/no, just load addr of    does this) from addr of AVBER & pu
4741  5230   JMP ANGL/exit  AVBER into AC      in 4C (induce it A-BER) or BER1
                            (angle)
4742  0040  LTL, 40;
4743  0100  DPL, 100;
4744  0200  VDL, 200;
4745  0400  THDL, 400;
4746  0317  DP, 317;
4747  0413  LT, 413;
4750  0400  VW, 400;
4751  0453  VDE, 453;
4752  0443  TH, 443
4753  0100  PO, 100;
4754  0367  PD, 367;
4755  0010  LD, 10;
4756  0463  LW, 463;
4757  0433  VDP, 433;
4760  0030  IL, 30;
4761  0403  ITP, 403;
4762  7761  TM, -17;/-15₁₀
4763  0523  AVI, 523/AVINC
4764  5647  PC, KYSPC;
4765  5611  PR, KYCP;
4766  5631  P2, KYCP2;
4767  0300  PT, 300;
4770  0333  PTA, 333;
4771  0423  DE, 423;
4772  0040  BR, 40;
4773  0517  AWB, 517/AVBER
4774  0100  PDL, 100
```

```
                 INIT        INITIALIZATION
                 *5510
                 SETUP=7706;
                 CHR=125;
                 LON=4620;
                 LOA=3154;
                 CALL=4172;
                 RETURN=5575;
                 BLANK=3606
                 L4R=44;
                 L3R=21;
                 AON=5440;
                  APUCF=6600
                 W=4137;
                 R=4142;
                 F=4164;
                 LDI=3124;
                 STUP=71;
                 INP=70;
                 BR2=6450
5510  5253       CH, -3525;
5511  1000       MI, 1000;
5512  5522       TF, TNF-1;
5513  0347       MG, 347;
5514  5516       PIOT, PIOT-1;
5515  0217       TEMF, 217;
5516  0373       PIT, 373
5517  6732       PIOT, 6732;/π/2 float
5520  6417        6417;
5521  6711        6711;
5522  6401        6401;
5523  6400       TNF, 6400;/10 float
5524  6400        6400;
5525  6640        6640;
5526  6404        6404;
5527  7706       ITR, SETUP
5530  5534       INBA, IN2
5531  1330       INIT, TAD INBA;/start. set up return addr
5532  3071        DCA ITUP;/in 0071 so you can
5533  5727        JMP I ITR/do 7706 routine in MONITOR
```

```
5534  3044  IN2, DCA L4R;/OK, clear LAR & L3R
5535  3021   DCA L3R;
5536  4172   CALL;/lights off
5537  3154   LOA;
5540  4172   CALL;/blank display
5541  3806   BLANK;
5542  1125   TAD CHK;/check memory valid
5543  1310   TAD CH;
5544  7650   SNA CLA/OK?
5545  5354   JMP IN1;/yes
5546  1311  TAD MI;/no, turn on memory invalid light
5547  4172   CALL;
5550  4620   LON;
5551  1310   TAD CH;/put correct value in mean check location (125)
5552  7041   CIA;
5553  3125   DCA CHK
5554  4172  IN1, CALL;/turn on APU
5555  5440   AON;
5556  4172   CALL;/load a single 0 into APU
5557  3124   LDC;
5560  4164   F; /float it
5561  1313   TAD MG;/put in MAGNETIC VECTOR
5562  4142   F;
5563  1312   TAD TF;/put 10 floated into TENF
5564  4137   W;
5565  1315   TAD TENF;
5566  4142   F
5567  1314   TAD POT;/put π/2 floated into PIT
5570  4137   W;
5571  1316   TAD PIT;
5572  4142   F;
5573  5470   JMP I INP/jump wherever calling routine wants to go
```

```
EXEC      EXECUTIVE
          BI2=6443;
          BI4=6453;
          RDT=7035;
          CHAR1=63;
          CALL=4173;
          RETURN=5575;
          BLANK=3606
          TEM11=55;
          AR2=6430;                    Exits with TEM11=0 got a data clock
          KYBR=5511;                                 1 "continue" pressed
          TEM13=57;                              7777₈ "ADD ROD","ENT" pressed
          KR1=6433;
          STEST=6413;
          RST=5147
          DISCO=3334;
          KR2=6433;
           LOA=3154;
           APUOF=6600;
           AON=5440;
           BKPT=4167
           KYSRC=6210;
           RSTC=6222;
           STESTC=6215;
           EXEX=6200;
           EXITE=6244
          ◆5000
5000  7771  DISP, -7;
5001  0017  MEM, 17;
5002  7035  DATR, RDT;
5003  7775  CONT, -3;
5004  7776  TEST, -2;
5005  7772  AR, -6;
5006  7761  TTY, -17;
5007  7762  RI, -16;
5010  7765  ENT, -13
5011  5612  EXEC, JMP I .+1;/patch to 6200
5012  6200   EXEX;/CAF, turn on "RESET" lite, turn off APU
5013  3055   DCA TEM11;/clear TEM11
5014  6433   KR2;/KBR request?
5015  5551   JMP E4;/no
5016  6430   AR2; /yes, mask & save
5017  0201   AND MEM;
5020  3063   DCA CHAR1
5021  1063   TAD CHAR1;/recall
5022  1200   TAD DISP;/was it DISPLAY request?
5023  7640   SZA CLA;
5024  5337   JMP E2;/no, check further
5025  4173   CALL;/yes
5026  6210   KYSRC
5027  1206  E2, TAD TTY;/was it MONITOR request?
5030  1063   TAD CHAR1;
5031  7640   SZA CLA;
5032  5336   JMP E3;/no, check further
5033  6453   BI4; /yes, see if TTY plugged in
5034  7000   NOP;
5035  5602   JMP I DATR /doesn't matter - go to RDT (7038) - calls out raw data
```

```
5036  1203  E3, TAD CONT;/"CONTINUE" pressed?
5037  1063   TAD CHAR1;
5040  7100   CLL;
5041  7640   SZA CLA;
5042  5251   JMP E4; /no, go on
5043  1057   TAD TEM13/yes, is "CONTINUE" allowed? (TEMB=0 allowed
5044  7640   SZA CLA;                                  ≠1 disallowed
5045  5251   JMP E4;/no, go on
5046  7101   CLL IAC; /yes, put a 1 in TEM11 to signal "CONTINUE"
5047  3055   DCA TEM11;
5050  5724   JMP I EXIT/exit to 6246
5051  6432  E4, KRS;/KBL request? (if it was any other KBR, program flow just
5052  5322   JMP E5;/no, go on                          clears it out)
5053  6430   KRB;/yes
5054  0201   AND MEK; /mask & save
5055  3063   DCA CHAR1;
5056  1063   TAD CHAR1;/recall
5057  1204   TAD TEST;/"TEST" pressed?
5060  7640   SZA CLA
5061  5264   JMP E6; /no, go on
5062  4173   CALL;/yes, run "self test"
5063  6215   STEST0
5064  1063  E6, TAD CHAR1;
5065  1207   TAD RG; /was "RG" pressed?
5066  7640   SZA CLA;
5067  5272   JMP E7;/no, go on
5070  4173   CALL;/do "RESTART"
5071  6222   RSTO
5072  1063  E7, TAD CHAR1;
5073  1205   TAD AR; /was "ADD ROD" pressed?
5074  7640   SZA CLA;
5075  5322   JMP E5; /no, go on
5076  4173   CALL;/yes, lights off
5077  3154   LOP;
5100  7001   IAC;/message "1"
5101  4173   CALL;
5102  3234   DISCO;
5103  7200   CLA;
5104  6433   KRB/wait for a KBR
5105  5304   JMP .-1
5106  6430   KRB;/yes, mask & test
5107  0201   AND MEK;
5110  1210   TAD ENT;/enter pressed?
5111  7640   SZA CLA;
5112  5320   JMP E3; /no, go on
5113  7040   CMA; /yes
5114  3055   DCA TEM11; /signal "AR","ENTER" pressed by loading TEM11 with 7777
5115  4173   CALL;/blank & return
5116  3606   BLANK;
5117  5575   RETURN
5120  4173  E3, CALL;/blank on general principles
5121  3606   BLANK
5122  5733  E5, JMP I BATCHK;/go to the battery check stuff, which will
5123  6502   BATCHK, 6502/recycle back to EXEC
5124  6246  EXIT, EXITE+2
```

```
MSIN
INF=70;
ANG=5355;
PIT=374;
BLANK=3604;
TEM5=45;
TEM13=57;
TEM11=55;
DATA=2405;
TEMP=100
DIFCAL=5751;
LOA=3154;
EXEC=5011;
LDI=3124;
R=4142;
CTR3=47;
TEM10=54;
F=4164
A=4153;
M=4150;
D=4167;
P=4145;
S=4156;
W=4137;
L=4732;
M=4710;
E=4564;
TEMH=101
POTCTR=52;
TEM7=50;
AVGV=4555;
CONOE=5704;
COM=4356;
COM1=4367;
PAKL=4441
SLEG=403;
M2EN=5420;
STIM=5400
PROC1=2031;
DIICO=3234;
PROC2=4022;
INIT=5531;
IDLE=5765;
STEIT=6407;
LON=4620
PRINIT=7773;
PRPO=7773;
CALL=4173;
RETURN=5575
DATCAL=4350;
GETIN=4483;
TEM9=53;
APUOF=6600;
AON=5440;
WCPAR=5429;
BWB=6451
MA15V=6237
```

```
                *5200                                   NEEDS WORK
5200  5213  MNA, MN1;
5201  0005  ID, 5;                                      CTR3=>counts # of shots for
5202  0317  DIPP, 317;                                  DIP averaging
5203  5531  INTA, INIT;
5204  0527  RG4, 527;
5205  0004  DP, 4;
5206  4441  PRL, PRL;
5207  0403  CLEN, CLEG
5210  1300  MAIN1, TAD MNA;/start.  put return addr from "INIT" in loc 0070
5211  3070   DCA INP;
5212  5603   JMP I INTA /go do INIT
5213  6425  MN1, WCRAA; /set up PIE
5214  6451   BW2;
5215  5616   JMP I .+1;/patch to 6227
5216  6227   MA1EX /if KBL, continue @ MN; if KBR, go to MAIN2 @ MAZ; also clears
5217  3047  MN, DCA CTR3;/clear CTR3
5220  7100   CLL;
5221  1201   TAD ID;/turn on "DIP" LED + "INITIAL" LED
5222  4172   CALL;
5223  4620   LON;
5224  3057   DCA TEM13;/a-low "continue"
5225  1202   TAD DIPP;/display current dip value
5226  4172   CALL;
5227  5355   ANG;/displays # stored as binary radians is 0-368 angle
5230  7040   CMA
5231  3045   DCA TEM5;
5232  4172   CALL;/go to EXEC for further instructions
5233  5011   EXEC
5234  1055   TAD TEM11;/data received? (i.e., TEM11=0?)
5235  7640   SZA CLA;
5236  5336   JMP M2;/no, go on
5237  3742   DCA I DIP1;/clear "DIP" @ LOC 0320
5240  3743   DCA I DIP2;
5241  3744   DCA I DIP3;
5242  3745   DCA I DIP4
5243  4172  M1, CALL;/go get new data set
5244  2405   DATA;/ACZO, timeout error. AC=1
5245  3054   DCA TEM10;/TEM10 now has error information from DATA
5246  3100   DCA TEMP;/clear TEMP
5247  4172   CALL; /turn on APU
5250  5440   AON;
5251  4172   CALL;/do data calibration
5252  4250   DATCAL;
5253  4172   CALL;/calculate dip & put it in ROG4 & display it
5254  5751   DIPCAL
5255  1100   TAD TEMP;/is there a battery or other CHEK error?
5256  7640   SZA CLA;
5257  5261   JMP .+2;/yes
5260  5264   JMP .+4;/no
5261  1054   TAD TEM10;/yes, get TEM10
5262  7040   CMA;/complementing TEM10 make sure it indicates an error, no matter
5263  3054   DCA TEM10;/how DATA came out
5264  1305   TAD DP;/light up DIP light only
5265  4172   CALL
5266  4630   LON;
5267  1304   TAD RG4;/get AC to point to REG4 for ANG
5270  4172   CALL;/display REG4 as an angle
5271  5355   ANG;
5272  6600   APUOF;/turn off APU
```

```
5273  3101   DCA TEMN;/clear TEMN
5274  4172   CALL;/go to CONOE to handle any data error
5275  5704   CONOE;
5276  1101   TAD TEMN/CLR/CONT or ENT pressed?
5277  7650   SNA CLA;
5300  5306   JMP M8;/ENT pressed, go on
5301  7040   CMA/CLR/CONT pressed, put 7777₈ into TEM13 to disallow CONT
5302  3057   DCA TEM13;/in EXEC
5303  4172   CALL;/wait for operator requests or DATA. Assumes you didn't
5304  5011   EXEC;/like that Dip reading. It gets thrown away
5305  5243   JMP M1;/got a data clock, back to M1
5306  1047   M8, TAD CTR3;/we are continuing with a valid DIP reading
5307  3053   DCA TEM9;/put current CTR3 into TEM9 for AVGV
5310  1204   TAD RG4;/point to current value of dip
5311  3055   DCA TEM11/put in TEM11 for AVGV
5312  1202   TAD DIFF;/make TEM7 point to accumulated average for AVGV
5313  3050   DCA TEM7;
5314  4172   CALL;/turn on APU
5315  5440   ACN
5316  4172   CALL; /do the current average for DIP
5317  4555   AVGV;
5320  1205   TAD DF;/turn on DIP light
5321  4172   CALL;
5322  4620   LCN;
5323  1202   TAD DIFF; /get current DIP average
5324  4172   CALL; /display as an angle
5325  5355   ANG;
5326  3057   DCA TEM13/allow continue
5327  4172   CALL; /wait for operator command or data
5330  5011   EXEC;
5331  1055   TAD TEM11/what happened?
5332  7640   SZA CLA;
5333  5336   JMP M2;/continue pressed (actually "AR","ENT" will get here too)
5334  2047   ISZ CTR3;/increment average counter
5335  5243   JMP M1/do it again
5336  7040  M2, CMA;
5337  3045   DCA TEM5;/signal "INITIAL" by making TEM5≠0
5340  5741   JMP I .+1;
5341  5400   GTIN/go on
5342  0320  DIP1, 320;
5343  0321   DIP2, 321;
5344  0322   DIP3, 322;
5345  0323   DIP4, 323
```

```
                  /ANG, AWG
                  CONW=5014;
                  REG5=5353;
                  CON=5604
                  W=4137;
                  A=4153;
                  D=4161;
                  P=4145;
                  RETURN=5575;
                  CALL=4172;
                  M=4150;
                  NEXT=33
                  STATUS=4347;
                  PBUF=43;
                  R=4142
                  /ANG
                  *5353
5353  5603        CN, CON-1;
5354  0533        RG5, REG5
5355  4137        ANG, W;/write REG4
5356  1353         TAD CN;/write ISO/π
5357  4137         W;
5360  4150         M;/do REG4x180
5361  1354         TAD RG5;/stroe in REG5
5362  4142         R;
5363  1354         TAD RG5;/point to REG5
5364  4172         CALL;/display # in REG5
5365  6014         CONW;
5366  5575         RETURN
                  /AWG
                  TWO=2025
5367  2024        TWOT, TWO-1
5370  4137        AWG, W;
5371  4153         A;
5372  1367         TAD TWOT;
5373  4137         W;
5374  4161         D;
5375  4145         P;
5376  5575         RETURN
```

```
                *KEYSR                KEY SERVICE
                KR2=6433;
                KR1=6432;
                AR2=6430;
                CHAR=61;
                TEM8=51;
                TEM7=50;
                TEM5=45;
                TEM14=62
                DISCO=3234;
                ADC1=3523;
                KEYCTR=27;
                CALL=4172;
                RETURN=5575;
                LOA=3154;
                CONV=6014
                TEM6=46;
                LON=4620;
                ANG=5355;
                M=4150;
                R=4142;
                W=4137;
                KYEX=6341;
                BLANK=3606;
                D=4161
                ANGE=2233
                *5600
5600  0017      MINK, 17;
5601  7775      IN1, -3;
5602  4600      DI, 4600;
5603  5603      CN, CON-1;
5604  6740      CON, 6740;
5605  6456       6456;
5606  6745       6745;
5607  6406       6406
5610  0007      CE, 7
5611  4172      KYSR, CALL;/lights off
5612  3154       LOA;
5613  4172       CALL;/blank display
5614  3606       BLANK;                          0-not "INITIAL"
5615  3045       DCA TEM5;/clear TEM5-used for else-"INITIAL"
5616  3051       DCA TEM8;/clear TEM8-used for 0=not an angle
5617  6007       CAF/clear any requests          else-an angle
5620  6432       KR1;/wait for KBL request
5621  5220       JMP .-1;
5622  6430       AR2;/read keyboard
5623  0200       AND MINK;/mask least significant 4 bits
5624  3061       DCA CHAR;/save
5625  1061       TAD CHAR/recall
5626  1301       TAD IN1;/was "INITIAL" pressed?
5627  7640       IAC CLA;
5630  5243       JMP KYSR1/no, go on
5631  7001      KYSR2, IAC; /yes, light "INITIAL" light
5632  4172       CALL;
5633  4620       LON;
5634  7040       CMA;
5635  3045       DCA TEM5/load TEM5 with 7777
```

```
5636  6432  KYCP3, KP1;/next press?
5637  5236   JMP .-1;
5640  6430   KP2;/get it
5641  0200   AND MSK;
5642  3061   DCA CHAR/save it
5643  1061  KYCP1, TAD CHAR
5644  1202  KYCPA, TAD DI; /add branch table starting addr to it
5645  3062   DCA TEM14;/put in RAM
5646  5462   JMP I TEM14/jump to branch table, 4600+ CHAR
5647  4172  KYCPC, CALL;/patch: KYEX displays value & gets another one in
5650  6341   KYEX /TOS of "INITIAL"
5651  7200  CLA;
5652  1027   TAD KEYCTR;/get KYCTR≠if new value has been keyed in
5653  7650   SNA CLA;
5654  5575   RETURN/return if no change to selected variable
5655  1045   TAD TEM5;/"INITIAL" selected?
5656  7650   SNA CLA;
5657  5272   JMP KF/no; ∴ error...can't change parameter w/o "INITIAL"
5660  1051   TAD TEM3;/is it an angle?
5661  7650   SNA CLA;
5662  5267   JMP KH;/no
5663  1203   TAD CN;/yes, load 180/π
5664  4137   M;
5665  4172   CALL;/do the conversion fromdegrees to radians (o°-360°)
5666  2233   ANGE
5667  1046  KH, TAD TEM6;/puts result in parameter pointed to by TEM6
5670  4142   R;
5671  5575   RETURN
5672  1210  KF, TAD CE;/signal "7" error message (never does this)
5673  4172   CALL;
5674  3234   DISCO;
5675  7200   CLA;
5676  5575   RETURN
```

can do without, just make KR, RETURN

```
                 GETIN        /GET initial conditions does initial calculations
                 W=4137;       GTIN actually gets parameters
                 P=4145;
                 R=4142;
                 I=4156;
                 SINE=2723;
                 COS=6136;
                 M=4150;
                 CALL=4172;
                 RETURN=5575
                 *4442
4442   6400      PARL, 6400;
4443   6400       6400;
4444   6640       6640;
4445   6405       6405;
4446   0403      ILEN, 403;
4447   0413      LT1, 413;
4450   0423      DEPRT, 423;
4451   0373      PITT, 373
4452   0477      ABER, 477;
4453   0503      AINC, 503;
4454   0467      BER1, 467;
4455   0507      BER2, 507;
4456   0473      INC1, 473;
4457   0513      INC2, 513;
4460   0517      AVBER, 517
4461   0523      AVINC, 523;
4462   0433      VDH, 433/vd
4463   1252      GETIN, TAD ABER;/write ABER
4464   4137       W;
4465   4145       P;
4466   1254       TAD BER1;/put ABER into BER1
4467   4142       R;
4470   4145       P;
4471   1260       TAD AVBER;/and AVBER
4472   4142       R;
4473   1255       TAD BER2;/and BER2
4474   4142       R;
4475   1253       TAD AINC;/put AINC into INC1
4476   4137       W
4477   4145       P;
4500   1256       TAD INC1;
4501   4142       R;
4502   4145       P;
4503   1261       TAD AVINC;/and AVINC
4504   4142       R;
4505   1257       TAD INC2;/and INC2
4506   4142       R;
4507   1253       TAD AINC;
4510   4137       W;
```

```
4511  1251   TAD PITT;/get AINC-π/2
4512  4137   W;
4513  4156   I;
4514  4145   P
4515  4172   CALL;
4516  2723   SINE;/sin (AINC-π/2)
4517  1246   TAD SLEN;
4520  4137   W;
4521  4150   M;/slewxsin(AINC-π/2)=VD
4522  1262   TAD VDH;/VD—>0434-0437
4523  4142   R;
4524  4172   CALL;/cos(AINC-π/2)
4525  6136   COS;
4526  1246   TAD SLEN;
4527  4137   W;
4530  4150   M;/slewxcos(AINC-π/2)
4531  4145   P;
4532  1250   TAD DEPPT/store in DEPPT
4533  4142   R
4534  1252   TAD ABER;
4535  4137   W;
4536  4172   CALL;
4537  6136   COS;
4540  4150   M;/cos(ABER)xslewxcos(AINC-π/2)
4541  1247   TAD LT1;
4542  4142   R;/put in LAT
4543  1250   TAD DEPPT;
4544  4137   W;
4545  1252   TAD ABER;
4546  4137   W;
4547  4172   CALL;
4550  2723   SINE
4551  4150   M;/sin ABERxslewxcos(AINC-π/2)—>DEP
4552  1250   TAD DEPPT;
4553  4142   R;
4554  5575   RETURN
```

```
                  ⌿PROC3
                  ADDF=153;
                  ARSIN=2677;
                  ARTAN=2659;
                  CALL=4173;
                  CHS=3761;
                  DIVF=161;
                  KEYT=33;
                  MULF=150
                  VDVT=3256;
                  DETT=6156;
                  AVG=5370
                  PBUF=43;
                  PIAS=3305;
                  POP=3661;
                  PUSH=145;
                  RD=142;
                  RETURN=5575;
                  SQRT=2703;
                  STATUS=4347
                  SUBF=156;
                  XCH=3144;
                  WT=137;
                  A=JMS ADDF;
                  D=JMS DIVF;
                  P=JMS PUSH
                  R=JMS RD;
                  S=JMS SUBF;
                  M=JMS MULF;
                  W=JMS WT;
                  SINE=2733;
                  COS=6136;
                  PBUF=43

                  ⌿PROC2
                  *4000
4000   0467       BEP1, 467;
4001   0503       AINC, 503;
4002   0517       AVBEP, 517;
4003   0403       ILEG, 403;
4004   0367       RODL, 367;
4005   0413       LAT1, 413
4006   0473       INC1, 473;
4007   0523       AVINC, 523;
4010   0423       DEPT, 423;
4011   0433       VD, 433;
4012   0443       THDR, 443
4013   0477       ABEP, 477;
4014   0327       LAD, 327;
4015   0463       LIEW, 463;
4016   0223       COZ, 223;
4017   0227       COA, 227;
4020   0233       IIB, 233;
4021   0323       IIA, 323
```

```
4022  1206  PROC2, TAD INC1;
4023  4137   W;
4024  1207   TAD AWINC;
4025  4172   CALL;
4026  5370   AWG;
4027  4172   CALL;
4030  6136   COI;
4031  1221   TAD SIA;
4032  4142   P
4033  4172   CALL;
4034  2723   SINE;
4035  1217   TAD COA;
4036  4142   P /SIN&COS REVERSED TO CONV AWINC TO THETA
4037  1204  TAD RODL;
4040  4137   W;
4041  1203   TAD SLEG;
4042  4137   W;
4043  4153   A;
4044  1203   TAD SLEG;
4045  4142   P
4046  1200  TAD BER1;
4047  4137   W;
4050  1202   TAD AWBER;
4051  4172   CALL;
4052  5370   AWG;
4053  4172   CALL;
4054  2723   SINE;
4055  1220   TAD SIB;
4056  4142   P
4057  4172   CALL;
4060  6136   COI;
4061  4145   P;
4062  1216   TAD COB;
4063  4142   P
4064  1217  TAD COA;
4065  4137   W;
4066  4150   M;
4067  1204   TAD RODL;
4070  4137   W;
4071  4150   M;
4072  1205   TAD LAT1;
4073  4137   W;
4074  4153   A;
4075  4172   CALL;
4076  4347   STATUS;
4077  3043   DCA PBUF
4100  1205   TAD LAT1
4101  4172  CALL;
4102  6156   DETT
4103  1211  TAD WD;
4104  4137   W;
4105  1204   TAD RODL;
4106  4137   W;
4107  1221   TAD SIA;
4110  4137   W;
4111  4150   M;
4112  4156   I;
4113  1211   TAD WD;
4114  4142   P
```

```
4115  1205  TAD LAT1:
4116  4137   W:
4117  4145   P:
4120  4150   M:
4121  1210   TAD DEPT:
4122  4137   W:
4123  4145   P:
4124  4150   M:
4125  4153   A:
4126  4145   P:
4127  4172   CALL:
4130  2703   IORT:
4131  1214   TAD LAD:
4132  4142   P:
4133  1211   TAD VD
4134  4137   W:
4135  4145   P:
4136  4150   M:
4137  4153   A:
4140  4172   CALL:
4141  2703   IORT:
4142  1212   TAD THDH:
4143  4142   P
4144  1210  TAD DEPT:
4145  4137   W:
4146  1205   TAD LAT1:
4147  4137   W:
4150  4161   D:
4151  4172   CALL:
4152  2655   ARTAN:
4153  4172   CALL:
4154  2305   PIRI
4155  1213   TAD ABER:
4156  4137   W:
4157  4156   I:
4160  4145   P:
4161  4172   CALL:
4162  6136   COI:
4163  4172   CALL:
4164  3144   XCH:
4165  4172   CALL:
4166  2723   SINE
4167  1214  TAD LAD:
4170  4137   W:
4171  4150   M:
4172  1215   TAD LDEV:
4173  4142   P
4174  1201   TAD PINC:
4175  4172   XXXXXXXX    JMPI+1 (5776)
4176  3256   XXXXXXXX    6431
4177  5575  XXXXXXXX
```

AVGV, SYMBOL TABLE

```
A        4153
AWGV     4555
CALL     4172
D        4161
F        4164
LDI      3124
M        4150
R        4142
RETURN   5575
TEM11    0055
TEM7     0050
TEM9     0053
W        4137

 PC00241 MD5214 A0000 U3155 L1 D0
>13003 7002
>C
```

```
          AWGV    /from AVeraGe Value
           TEM9=53;                 Enter with TEM7—> (current value)
           TEM11=55;                           TEM9—> # of iterations (0=1st time)
           TEM7=50;                           TEM11—> (average value)
           LDI=3124;                Exit with  TEM7—> (unchanged)
           W=4137;                             TEM9—> unchanged
           M=4150;                            TEM11—> (new average value)
           F=4164;
           A=4153;
           D=4161
           CALL=4172;
           RETURN=5575;
           R=4142
           *4555
4555  1053  AWGV, TAD TEM9;/fetch current # of iterations (N)
4556  4172   CALL;/load & float
4557  3124   LDI;
4560  4164   F;
4561  1050   TAD TEM7;/point to accumulated average (AV)
4562  4137   W;
4563  4150   M;/(NxAV)
4564  1055   TAD TEM11;/write current value (CV)
4565  4137   W;
4566  4153   A/(NxAV)+CV
4567  1053   TAD TEM9;/load N+1
4570  7001   IAC;
4571  4172   CALL;
4572  3124   LDI;
4573  4164   F;
4574  4161   D;/ (NxAV)+CV / N+1 = new AV
4575  1050   TAD TEM7;/put the result in loc pointed to by TEM7
4576  4142   R;
4577  5575   RETURN
```

```
                BATCHK  /check batteries
                DISCO=3234;
                LON1=4622;
                CALL=4172;
                RETURN=5575;
                BS1=6442;
                BS2=6443;
                TEMP=100
                STATUS=4347;
                EXITE=6244
                *6500
6500  0020      LB, 20;
6501  5012      EXEC1, 5012;
6502  6442      BATCHK, BS1;/processor battery low?
6503  5313       JMP .+8;/no, go on
6504  1300       TAD LB; /yes, turn on "LO BATTERY"
6505  4172       CALL;
6506  4622       LON1;
6507  4172       CALL;/display a "0" code
6510  3234       DISCO
6511  7000       NOP;
6512  7000       NOP;
6513  5714       JMP I .+1; /continue with EXITE
6514  6244       EXITE;
6515  7000       NOP
```

```
                 /RBAT          /Receiver Battery Check
6516  0004  STTM, 4;
6517  0314  RSTAT, 314;
6520  1717  RBAT, TAD I RSTAT; /get receiver status word
6521  0316   AND STTM;/mask off bit 9
6522  7650   SNA CLA;/battery OK?
6523  5325   JMP .+2 /no
6524  5575   RETURN;/yes, return
6525  5343   JMP CHEK2 /exit thru CHEK2 to turn on LO BATTERY
                         /lite and set TE =1
                 /TEME          /TEMPERATURE ERROR HANDLER
                 TEMD=75
6526  7132  TEME, STL RTR; /turn on HI TEMP
6527  4172   CALL;
6530  4620   LON;
6531  7040   CMA; /put 7777₈ into TEMD
6532  3075   DCA TEMD;
6533  5350   JMP CHEK3 /exit thru CHEK3 to set TEMP=1

                 /CHEK          /used to handle battery check
                 TEM10=54;
                 LON=4620
6534  0020  LITE, 20;
6535  0010  DIS, 10
6536  4172  CHEK, CALL; /number in TOS negative?
6537  4347   STATUS;
6540  7650   SNA CLA;
6541  5575   RETURN/yes
6542  1335  CHEKA, TAD DIS /no, display "8" code
6543  4172  CHEK2, CALL;
6544  3334   DISCO;
6545  1334   TAD LITE; /turn on "LO BATT" lite
6546  4172   CALL;
6547  4622   LON1 /LON1 turns on L4 lites
6550  7001  CHEK3, IAC; /put a "1" in TEMP
6551  3100   DCA TEMP;
6552  5575   RETURN

                 /KYBLK
                 BLANK=3606;
                 JMPR=30;
                 KEYCTR=27;
                 MINUS=31
                 *6553
6553  4264  ENTER, -3514
6554  1031  KYBLK, TAD MINUS;
6555  1027   TAD KEYCTR;
6556  7640   SZA CLA;
6557  5430   JMP I JMPR;
6560  1353   TAD ENTER;
6561  1030   TAD JMPR
6562  7650   SNA CLA;
6563  5430   JMP I JMPR;
6564  4172   CALL;
6565  3606   BLANK;
6566  5430   JMP I JMPR
```

```
                 /KYEX;
                 TEM5=45;
                 LON=4620;
                 TEM8=51;
                 TEM6=46;
                 CONV=6014;
                 CALL=4172;
                 RETURN=5575;
                 ACC=3521
                 ANG=5355;
                 CONV=6014;
                 KEYCTR=27;
                 AON=5440;
                 APUOF=6600;
                 ANGA=2214
                 *6341
6341   4172   KYEX, CALL;/turn on APU
6342   5440    AON;
6343   1051    TAD TEM8;/is it an angle?
6344   7650    SNA CLA;
6345   5352    JMP KYSRD; /no
6346   1046    TAD TEM6;/yes, display as 0°-360°
6347   4172    CALL;
6350   2214    ANGA;
6351   5355    JMP KE
6352   1046   KYSRD, TAD TEM6;/display as a length in feet
6353   4172    CALL;
6354   6014    CONV
6355   6600   KE, APUOF;/turn off APU
6356   1045    TAD TEM5;/"INITIAL"?
6357   7650    SNA CLA;
6360   5373    JMP KM; /no
6361   7001    IAC;/yes, turn on "INITIAL" lite
6362   4172    CALL;
6363   4620    LON;
6364   4172    CALL;/get a # from operator
6365   3521    ACC;
6366   7000    NOP
6367   1027    TAD KEYCTR;/was a new # entered?
6370   7650    SNA CLA;
6371   5373    JMP KM;/no
6372   5575    RETURN
6373   3027   KM, DCA KEYCTR;/zeroize keycounter
6374   5575    RETURN

6375   7000   PRINIT, NOP;
6376   5575    RETURN
6377   7000   PRPO, NOP;
6400   5575    RETURN
```

```
                 APUOF=6600;
                  EXEC=5013;
                  STEST=6412;
                  KYSR=5611;
                  RST=5147;
                  CALL=4172;
                  RETURN=5575
                  LON1=4622;
                  TEMS=57
                 /EXEX
                 *6200
6200  6007      EXEX, CAF;/clear all requests
6201  6600       APUOF;/turn off APU
6202  1207       TAD RDY; /turn on RESET lite
6203  4172       CALL;
6204  4622       LON1;
6205  5606       JMP I EXE /return to EXEC
6206  5013      EXE, EXEC;
6207  2000       RDY,2000
                 /KYSRC
6210  4172      KYSRC, CALL;/calling routine for KYSR
6211  6246       EXITE+2;
6212  4172       CALL;
6213  5611       KYSR;
6214  5575       RETURN
                 /STESTC
6215  4172      STESTC, CALL; /calling routine for STEST
6216  6246       EXITE+2;
6217  4172       XXXXX    JMPI.+1 5620
6220  6412       STEST;
6221  5575       RETURN
                 /RSTC
6222  4172      RSTC, CALL; /calling routine for RST
6223  6246       EXITE+2;
6224  4172       CALL;
6225  5147       RST;
6226  5575       RETURN
```

```
                /MA1EX          /MAIN1 EXTENSION
                KR1=6432;
                 KR2=6433;
                 MA2=6632;
                 MN=5217;
                 DISCO=3234
6227  6007  MA1EX, CAF; /clear all requests
6230  1200   TAD EXEX; /display "T"
6231  4172   CALL;
6232  3234   DISCO;
6233  6432   KR1;/KBL?
6234  5236   JMP MA1EX1;/no, try KBR
6235  5643   JMP I MNA /yes, back to MAIN1 @ MN
6236  6433  MA1EX1, KR2; /KYBR?
6237  5227   JMP MA1EX; /no, start over
6240  3057   DCA TEM5; /yes, clear TEM5
6241  5642   JMP I MA2N; /back to MAIN2 @ MA2
6242  6632  MA2N, MA2;
6243  5217  MNA, MN
              /EXITE
              BS2=6443;
               CHLITE=2516
6244  6443  EXITE, BS2; /this is not done
6245  5201   JMP EXEX+1;
6246  7320   CLA STL;/turn off RESET lite
6247  7421   MQL;
6250  1254   TAD RDYO;
6251  4172   CALL
6252  2516   CHLITE;
6253  5575   RETURN; /return
6254  5777  RDYO, 5777
              /PROPA  /change to PROC1 to call 0° down
              W=4137;        see PROC1 for explanation
               XCH=3144;
               S=4156;
               CHS=3761;
               A=4153
              *6260
6260  4137  PROPA, W;
6261  4172   CALL;
6262  3144   XCH;
6263  4172   CALL;
6264  3761   CHS;
6265  4153   A    /S IF 0 DEGREES IS UP
6266  5667   JMP I  .+1;/back to PROC1 @ 2042
6267  2042   2042
```

```
CTR2=42;
TEM=10;
LDS=3124;
WT=137;
ADDS=3134;
MULS=3140;
FLT=164
BW1=6441;
DIVF=161;
CHS=3761;
RD=142;
CALL=4172;
RETURN=5575
```

SCDATA *6300 /Scale Data

```
6300  0243  R,       243
6301  0005  FI,      5
6302  7774  TMD,     -4
6303  0007  TFS,     7
6304  7766  TE,      -12
6305  1304  SCDATA, TAD TE/make CTR2 count 10₁₀ times
6306  3042           DCA CTR2
6307  1300           TAD R /put addr of 1st data loc (244-247) into T
6310  3010           DCA TEM
6311  1301  SCA,     TAD FI/load 5 into TOS
6312  4172           CALL
6313  3124           LDS
6314  1010  TAD TEM  /load 1st (next) data word [D.W.] as 32 bit
6315  4137  JMS WT
6316  4172           CALL/create 16 bit # (single) for DW
6317  3134           ADDS
6320  4172           CALL /DW (single) x5 (single)
6321  3140           MULS
6322  4164  JMS FLT /float the result
6323  7040           CMA /load 2047₁₀ (float)
6324  6441           BW1
6325  0303           AND TFS
6326  6441           BW1
6327  4164  JMS FLT      D.W.x5
6330  4161  JMS DIVF/get 2047₁₀ (float)
6331  4172           CALL/change sign to compensate for downhole inver
6332  3761           CHS
6333  1010  TAD TEM /WT advances the addr in TEM, so get it
6334  1302  TAD TMD /back and load with the scaled data
6335  4142  JMS RD
6336  2042  ISZ CTR2 /10 times?
6337  5311  JMP SCA/no, do it again
6340  5575           RETURN /yes, return
```

```
                    /SELF TEST CALLS AND PATCHES

                    STEST=5800;
                     LON=4620;
                     LON1=4622;
                     MEMCW=6100;
                     MEMNOR=6500;
                     CALL=4172
                     RETURN=5575;
                     DATA=2405;
                     ACM=5440;
                     APUCF=6600;
                     CONV=6014;
                     RET=5663;
                     TEMP=101

                    *6400
6400  7240          START, CLA CMA;
6401  4172           CALL;
6402  4620           LON;
6403  7040           CMA;
6404  4172           CALL;
6405  4622           LON1;
6406  6100           MEMCW;
6407  5610           JMP I.+1;
6410  5800           STEST
6411  6500          STST0, MEMNOR;
6412  4172           CALL;
6413  2405           DATA;
6414  6100           MEMCW;
6415  5616           JMP I .+1;
6416  5663           RET
6417  6500          STST1, MEMNOR;
6420  4172           CALL;
6421  5440           ACM;
6422  1101           TAD TEMP;
6423  4172           CALL;
6424  6014           CONV;
6425  5270           JMP END;
6426  7000           NOP;
6427  7000           NOP

                    /INITIAL CONDITIONS PRINT ROUTINE

                    INCO=4400;
                     MAIN2=6620
6430  6100          INITCO, MEMCW;
6431  5632           JMP I .+1;
6432  4400           INCO
6433  6500          INIT1, MEMNOR;
6434  4172           CALL;
6435  2406           BLANK;
6436  5637           JMP I .+1;
6437  6620           MAIN2
```

```
                  /REITART PRINT ROUTINE

                  LOA=3154;
                   RST=4412
6440   4172      REITR, CALL;
6441   3154       LOA;
6442   6100       MEMSW;
6443   5644       JMP I .+1;
6444   4412       RST
6445   6500      REITR1, MEMNOR;
6446   4172       CALL;
6447   3606       BLANK;
6450   5575       RETURN

                  /SURVEY PRINT ROUTINE

                  VDVT=3256;
                   SUR=4424;
                   BLANK=3606
6451   4172      SURVEY, CALL;
6452   3256       VDVT;
6453   6100       MEMSW;
6454   5655       JMP I .+1;
6455   4424       SUR
6456   6500      SURV1, MEMNOR;
6457   4172       CALL;
6460   3606       BLANK;
6461   5575       RETURN


                  /USED BY PRINT CALLER


                  ANGA=2214
6462   6500      STSTA, MEMNOR;
6463   4172       CALL;
6464   5440       ADN;
6465   1101       TAD TEMN;
6466   4172       CALL;
6467   2214       ANGA;
6470   6600      END, APUOF;
6471   6100       MEMSW;
6472   7300       CLA;
6473   5575       RETURN
```

```
/CONV   /displays a # as a decimal #

                    *6000/enter with # to be diaplayed in TOS

6000  0004  FOUR,   4
6001  7000  BLK,    7000
6002  0217  TENF,   217 /addr of 10 floated
6003  7773  FI,     -5
6004  0240  HTH,    240
6005  0206          206
6006  0001          1
6007  0000          0
6010  6003  HTHL,   HTH-1 /addr of HTH for WT routine
6011  0230  RG2,    REG2
6012  0227  RG2M,   REG2-1/addr of REG2 for WT routine
6013  0001  TW,     1
6014  4172  CONV,   CALL/if is ≥xxxx.xx5, rounds up. <xxxx.xx5, rounds down
6015  2257          POF
6016  1203          TAD FI/make CTR2 count to 5
6017  3042          DCA CTR2
6020  4172          CALL/blank display
6021  3606          BLANK
6022  1202          TAD TENF/load 10
6023  4137  JMS WT
6024  4145  JMS PUSH
6025  4150  JMS MULF
6026  4150  JMS MULF/create #x100
6027  4172          CALL /plus or minus?
6030  4347          STATUS
6031  7650          SNA CLA
6032  5236          JMP .+4 /plus
6033  4172          CALL/minus, change sign, &
6034  3761          CHS
6035  7013          IAC RTR /put 1 in MSB of AC
6036  3031          DCA MINUS/store in MINUS
6037  4172          CALL /FIX (double precision -16 bits) the #
6040  6130          FIXD
6041  1210          TAD HTHL/write 100,000
6042  4137  JMS WT
6043  7100  C2,     CLL
6044  2027          ISZ KEYCTR/increment keystroke counter
6045  1212          TAD RG2M/put TOS into REG2 (will have the next power of 10
6046  4142  JMS RD
6047  4145  JMS PUSH/push the working number
6050  1212          TAD RG2M/get the power of 10 back
6051  4137  JMS WT
6052  4172          CALL /÷ by the power of 10, truncate fractional part
6053  2713          DIVD
6054  4145  JMS PUSH/save it in the stack
6055  4172          CALL/picks off the 4 LSB's of TOS & uses DISPR to display
6056  3370          LSW                          it as a decimal #. Throws
6057  1212          TAD RG2M /get power of 10    out TOS
6060  4137  JMS WT
6061  4172          CALL /multiply by truncated integer
6062  2673          MULD
6063  4172          CALL /remove MSD from working #
6064  2717          SUBD
6065  2042          ISZ CTR2/done 5 times?
6066  5273          JMP C3 /no
6067  2027          ISZ KEYCTR /causes DISPR to put in decimal pt. after 4 #s
6070  4172          CALL/goes to DISPR with 6th digit
6071  3370          LSW
6072  5312          JMP EXIT
```

```
6073  1212  C3,     TAD RGEM /create next lower power of 10
6074  4137  JMS WT
6075  1202          TAD TENF
6076  4137  JMS WT
6077  4172          CALL
6100  6130          FIXD
6101  4172          CALL
6102  2713          DIVD
6103  1213          TAD TW/is this the 4th time?
6104  1042          TAD CTR2
6105  7640          SZA CLA
6106  5243          JMP C2/no, do it again
6107  4172          CALL/yes, DISPR will push digits over 2 places S
6110  3630          DISPR /put in a decimal point, then return
6111  5243          JMP C2/do it again
6112  1031  EXIT,   TAD MINUS /negative #?
6113  7650          SNA CLA
6114  5575          RETURN/no, return
6115  1025          TAD DISPR2/yes, make sure MSD of display is bl
6116  1201          TAD BLK/so minus sign may appear
6117  3025          DCA DISPR2
6120  4172          CALL
6121  3672          DIS3
6122  7240  CLA CMA/turn on minus sign
6123  7421          MQL
6124  7121          IAC STL
6125  4172          CALL
6126  2516          CHLITE
6127  5575          RETURN/done
6130  4172  FIXD,   CALL/the "fix double" APU routine
6131  2727          CRAB
6132  1335          TAD .+3
6133  5734          JMP I .+1
6134  2734          BW
6135  0036          36

                    /COS

6136  4172  COS,    CALL/the cosine routine
6137  2727          CRAB
6140  1343          TAD .+3
6141  5742          JMP I .+1
6142  2734          BW
6143  0003          3

                    /PI

6144  4172  PI,     CALL/puts PI in TOS
6145  2727          CRAB
6146  1351          TAD .+3
6147  5750          JMP I .+1
6150  2734          BW
6151  0032          32
```

```
                    EDT
                   *AR2=6433;
                    AR3=6430;
                    F=4164;
                    CALL=4172;
                    RETURN=5575;
                    W=4137;
                    R=4143;
                    ADN=5440
                    CHAR1=63;
                    CT=102;
                    CONV=6014;
                    BC4=6453;
                    M=4150;
                    ARUOF=6600;
                    DICRR2=25;
                    DIGG=3672
                    D=4161;
                    BW=2734;
                    CRAB=2727;
                    A=4153;
                    CTR=27;
                    P=4145;
                    MEMNOR=6500;
                    EXITE=6246
                   *7010
7010  0243  LIST, 243;
7011  0247   247;
7012  0253   253;
7013  0257   257;
7014  0263   263;
7015  0267   267;
7016  0273   273;
7017  0277   277;
7020  0303   303;
7021  0307   307
7022  7007  START, LIST-1;
7023  0314   ROWR, 314;
7024  0217   TEN, 217;
7025  0567   DEBUG, 567;
7026  7766   CONT, -12;
7027  0017   MSK, 17
7030  7771   DICR, -7;
7031  0377   MK, 377;
7032  0003   MK1, 3;
7033  5011   EMSC, 5011;
7034  7770   EM, -10
7035  5371  EDT, JMP AHD;
7036  6433   BK, AR2;
7037  5336   JMP .-1;
7040  6430   AR3;
7041  0327   AND MSK;
7042  3063   DCA CHAR1;
7043  1063   TAD CHAR1
7044  1330   TAD DICR;
7045  7640   ICA CLA;
7046  5350   JMP NEXT;
7047  7100   CLL;
7050  1326   TAD CONT;
7051  3102   DCA CT;
7052  1322   TAD START;
7053  3011   DCA 11
```

```
7055  5440   AON;
7056  1411   TAD I 11;
7057  4137   W;
7060  1224   TAD TEN;
7061  4137   W;
7062  4150   M;
7063  1224   TAD TEN;
7064  4137   W;
7065  4150   M;
7066  1225   TAD DEBUG;
7067  4142   R
7070  1225   TAD DEBUG;
7071  4172   CALL;
7072  6014   CONV;
7073  6600   APUCF;
7074  6433   KR2;
7075  5274   JMP .-1;
7076  2102   ISZ CT;
7077  5254   JMP BACK
7100  6500  REC, MEMNOR;
7101  4172   CALL;
7102  5440   AON;
7103  1353   TAD TTF;
7104  4137   W;
7105  1623   TAD I POWR;
7106  7012   RTR;
7107  7421   MQL;
7110  1232   TAD MK1;
7111  7501   MQA
7112  6441  6441;
7113  7002   BSW;
7114  7012   RTR;
7115  0227   AND MSK;
7116  6441   6441;
7117  4164   F;
7120  4161   D;
7121  4172   CALL;
7122  7164   LOG;
7123  1224   TAD TEN;
7124  4137   W;
7125  4145   E;
7126  4153   A;
7127  4150   M;
7130  4145   E;
7131  4153   A
```

```
7132  1623   .TAD I POWR;
7133  7012    PTR;
7134  7012    PTR;
7135  7630    IOL CLA;
7136  5342    JMP .+4;
7137  1360    TAD THY;
7140  4137    W;
7141  4153    A
7142  1225    TAD DEBUG;
7143  4142    R;
7144  1225    TAD DEBUG;
7145  4172    CALL;
7146  6014    CONV;
7147  5633    JMP I EXEC
7150  6453   NEXT, BS4;
7151  5633    JMP I EXEC;
7152  4167    4167
7153  7152   TTF, TTF-1;
7154  6400    6400;
7155  6600    6600;
7156  6413    6413;
7157  0010    LG, 10
7160  7157   THY, THY-1;
7161  6400    6400;
7162  6750    6750;
7163  6405    6405
7164  4172   LOG, CALL;
7165  3727    CPAB;
7166  1357    TAD LG;
7167  5770    JMP I .+1;
7170  3734    BW
7171  6007   AAD, CAF;
7172  4172    CALL;
7173  6246    EXITE;
7174  5236    JMP BK
```

```
%MAIN2
IR=70;
ANG=5355;
PIT=374;
BLANK=3606;
TEM5=45;
TEM13=57;
TEM11=55;
DATA=2405;
TEMP=100
DIPCAL=5751;
LDA=3154;
EXEC=5011;
LDS=3124;
R=4142;
CTR3=47;
TEM10=54;
F=4164
A=4153;
M=4150;
D=4167;
P=4145;
S=4156;
W=4137;
TEMN=101
ROTCTR=52;
TEM7=50;
AVGV=4555;
CONDE=5704;
COM=4356;
COM1=4367;
PAKL=4441
SLEG=403;
M2EM=5422;
GTIN=5400;
AON=5440;
APUOF=6600
PROC1=2031;
DISCO=3234;
PROC2=4022;
INIT=5531;
IDLE=5765;
STEST=6407;
LON=4620
PRINIT,=7772;
PRPO=7772;
CALL=4172;
RETURN=5575
DATCAL=4250;
GETIN=4463;
TEMP=53
```

```
6600  0467  B1, 467;
6601  0507  B2, 507;
6602  0473  I1, 473;
6603  0513  I2, 513;
6604  6603  BR, BR-1; /Bearing limit - should be approx. 1.5°
6605  6400   6400;6567
6606  6600   6600;6726   1.5° in radians* IS ON ROM 2/22/80
6607  6477   6477;6573
6610  6607  IN, IN-1;/inclination limit - should be approx. 1.5°
6611  6400   6400;6772
6612  6600   6600;6616  2° in radians* IS ON ROM 2/22/80
6613  6477   6477;6574
6614  0003  THR, 3;
6615  0517  AVBR, 517;
6616  0523  AVIN, 523;
6617  0002  INL, 2
6620  4172  MAIN2, CALL;/turn on APU
6621  5440   AON;
6622  1215   TAD AVBR;
6623  4137   W;                /replace BER1 with AVBER
6624  1200   TAD B1;
6625  4142   R;
6626  1216   TAD AVIN;
6627  4137   W;                /replace INC1 with AVINC
6630  1202   TAD I1;
6631  4142   R
6632  4172  MA2, CALL; /wait for new data
6633  5011   EXEC;
6634  1055  MA2N, TAD TEM11;/make sure pressing "AP","ENT" does not
6635  7640   SZA CLA;/move the program on; only new data
6636  5232   JMP MA2;
6637  3052   DCA ROTCTR/clear rotation counter
```

*- to get change these values: (1) on front panel, set initial dip to value you want (e.g., 2°)

(2) read locations 0321, 0322 & 0323 for the 3 octal #'s for that angle

```
6640  4172  M4, CALL; / get DATA
6641  2405   DATA;
6642  3054   DCA TEM10; /store DATA's error-message
6643  3100   DCA TEMP; /zeroize TEMP
6644  4172   CALL; /APU ON
6645  5440   AON
6646  4172   CALL;/calibrate data
6647  4250   DATCAL;
6650  1100   TAD TEMP;/any DATCAL errors? (TEMP = 1?)
6651  7640    SZA CLA;
6652  5254   JMP .+2 /yes
6653  5257   JMP .+4;/no
6654  1054   TAD TEM10;/complement TEM10 so it will indicate error
6655  7040   CMA; /however DATA left it
6656  3054   DCA TEM10
6657  4172  M5, CALL;/calculate BER2 and INC2
6660  2031   PROC1;
6661  3053   DCA TEM9;/ clear TEM9, used here as error store for COM1
6662  1201   TAD B2; /compare BER2 with BER1 to see if it in limits
6663  4137   W;
6664  1200   TAD B1;
6665  4172   CALL;
6666  4356   COM;
6667  1204   TAD BR;
6670  4172   CALL;
6671  4367   COM1
6672  1203   TAD I2; /compare INC2 with INC1
6673  4137   W;
6674  1202   TAD I1;
6675  4172   CALL;
6676  4356   COM;
6677  1210   TAD IN;
6700  4172   CALL;
6701  4367   COM1
6702  1053   TAD TEM9
6703  7650   SNA CLA; /out of limits?
6704  5317   JMP M6; /no, go on
6705  3053   DCA TEM9;/yes
6706  1214   TAD THR; /display "3" code
6707  4172   CALL;
6710  3234   DISCO;
6711  6433   KRB; /wait for KBR to show operator acknowledge
6712  5311   JMP .-1
6713  4172   CALL;/lights off
6714  3154   LOA;
6715  4172   CALL;/APU on (unnecessary)
6716  5440   AON
```

```
6717  1217  M6, TAD INL;/turn on INC lite
6720  4172   CALL;
6721  4620   LON
6722  1203   TAD I2;/display INC2
6723  4172   CALL;
6724  5355   ANG;
6725  6600   APUOF  /AUP off
6726  3101  DCA TEMN;/clear TEMN
6727  4172   CALL; /blink the lights and wait for operator "ENT" or "CLR"
6730  5704   CONOE; /
6731  1101   TAD TEMN; /TEMN = 1 if CLR, 0 if ENT
6732  7650   CMA CLA;/1 ENT?
6733  5341   JMP M7; /yes, go on
6734  7040   CMA; /no, disallow "CONTINUE"
6735  3057   DCA TEM13 /and wait for new data
6736  4172   CALL; /Pressing "AR", "ENT" here will cause a time out error
6737  5011   EXEC;
6740  5240   JMP M4 /go back to M4 with new data
6741  1052  M7, TAD ROTCTR; /get Rotation counter
6742  3053   DCA TEM9; /set up AVGV (average value) routine
6743  1201   TAD B2;
6744  3055   DCA TEM11; /with ROTCTR, BER2 AND AVBER
6745  1315   TAD AVBER;
6746  3050   DCA TEM7
6747  4172   CALL;
6750  5440   AON;/APU on
6751  4172   CALL
6752  4555   AVGV; /get new average (AVBER)
6753  1203   TAD I2;/now do it for INC
6754  3055   DCA TEM11;
6755  1316   TAD AVIN;
6756  3050   DCA TEM7;
6757  4172   CALL;
6760  4555   AVGV; /get new avinc
6761  2052   ISZ ROTCTR /advance ROTCTR
6762  1217   TAD INL;/turn on "INC"lite
6763  4172   CALL;
6764  4620   LON
6765  1316   TAD AVIN; /display average inclination
6766  4172   CALL;
6767  5355   ANG;
6770  5771   JMP I  .+1; /jump to the MAIN2 patch, MZEX
6771  5433   MZEX
```

```
DD PC01163 MD6111 A0304 L1 D0
>2
>2
>10000 2002
>200G

IC   0200   AT   0200

AON       5440
CALL      4172
MEMNOR    6500
MEMOW     6100
RETURN    5575
SCDATA    6305
STZ       6270

 PC00241 MD5214 A0000 L1 D0
>12002 7002
>C
 PC01505 MD5227 A0000 L0 D0
>17002 7002
>C
```

```
/SCDATA CALL

MEMNOR=6500;
 MEMOW=6100;
 CALL=4172;
 RETURN=5575;
 AON=5440;
 SCDATA=6305

*6270

6270   6500   STZ  MEMNOR;
6271   4172    CALL;
6272   5440    AON;
6273   4172    CALL;
6274   6305    SCDATA;
6275   6100    MEMOW;
6276   5575    RETURN
```

MONITOR

```
                        /SYMBOL DEFINITION

                        CALL=JMS CALLX
                        RETURN=JMP I RETX
                        WCRAA=6425
                        WCRBA=6435
                        WCRAB=6445
                        WCRBB=6455
                        RWT=6421
                        RCK=6423
                        KCK=6422
                        KRD=6420

                        *7776
7776   5210             RESET,  5210
7777   5776                     JMP I .-1

                        *7200

7200   7567   J4A,      J4
7201   7773   NCTR,     -5
7202   7770   CHK,      -10
7203   7520   CH1,     -250
7204   7561   F,       FAULT
7205   0007   OCTMK,    7
7206   1200   PACK1,   TAD J4A
7207   3131             DCA NCTR1
7210   1201             TAD NCTR
7211   3005             DCA CTR
7212   2005   BEG,      ISZ CTR
7213   5215             JMP NUMB
7214   5575             RETURN
7215   4172   NUMB,     CALL
7216   7747             READ
7217   1127             TAD CHAR
7220   0202             AND CHK
7221   1203             TAD CH1
7222   7640             SZA CLA
7223   5604             JMP I F
7224   1127             TAD CHAR
7225   0205             AND OCTMK
7226   7100             CLL
7227   5531             JMP I NCTR1
7230   6420   CRLF,     KRI
7231   7200             CLA
7232   1241             TAD CRA
7233   4173             CALL
7234   7742             PRINT
7235   1242             TAD LFA
7236   4173             CALL
7237   7742             PRINT
7240   5575             RETURN
7241   0275   CRA,      275 1 = sign to save paper
7242   0275   LFA,      275 1 = sign to save paper
```

```
                        /READER

                        TRI=6420
                        SKIP=6422
                        EXIT=7
                        CTR1=6
                        CTR=5
                        DEST=4
                        TEM=3

7343  7772  LD,       ST
7344  7266  B11,      B4
7345  7273  B2,       B3
7346  7332  B70,      B7
7347  7335  B80,      B8
7350  7756  CT1,      -32
7351  7777  MONE,     -1
7352  0077  MSK,      77
7353  6420  READER,   TRD
7354  6422            SKIP
7355  7000            NOP
7356  7300            CLA CLL
7357  1344            TAD B11
7360  3003            DCA TEM
7361  1345            TAD B2
7362  3007            DCA EXIT
7363  3005            DCA CTR
7364  1350            TAD CT1
7365  3006            DCA CTR1
7366  2005  B4,       ISZ CTR
7367  5273            JMP B3
7370  2006            ISZ CTR1
7371  5273            JMP B3
7372  5643            JMP I LD
7373  7200  B3,       CLA
7374  6422            SKIP
7375  5403            JMP I TEM
7376  6420            TRD
7377  7006            RTL
7300  7006            RTL
7301  7104            CLL RAL
7302  7430            SZL
7303  5407            JMP I EXIT
7304  7004  B1,       RAL
7305  7421            MQL
7306  7420            SNL
7307  5313            JMP B5
7310  1346            TAD B70
7311  3004            DCA DEST
7312  5315            JMP B6
7313  1347  B5,       TAD B80
7314  3004            DCA DEST
```

```
7315  7501  B6,     MQA
7316  7012          RTR
7317  7012          RTR
7320  7012          RTR
7321  0252          AND MSK
7322  7002          BSW
7323  7421          MQL
7324  6432          SKIP
7325  5324          JMP .-1
7326  6420          TFD
7327  0252          AND MSK
7330  7501          MQA
7331  5404          JMP I DEST
7332  1251  B7,     TAD MONE
7333  3010          DCA 10
7334  7410          SKP
7335  3410  B8,     DCA I 10
7336  1243          TAD .
7337  3007          DCA EXIT
7340  1245          TAD B2
7341  3003          DCA TEM
7342  5273          JMP B3
7343  0000  JMSI,   0
7344  5541          JMP I WT+2
7345  2742          2742
7346  0000          0
7347  5544          JMP I PI+2
7350  2754          2754
7351  0000          0
7352  5547          JMP I PUSH+2
7353  2647          2647
7354  0000          0
7355  5552          JMP I MULF+2
7356  2665          2665
7357  0000          0
7360  5555          JMP I ADDF+2
7361  2633          2633
7362  0000          0
7363  5560          JMP I SUBF+2
7364  2641          2641
7365  0000          0
7366  5563          JMP I DIVF+2
7367  2635          2635
7370  0000          0
7371  5566          JMP I FLT+2
7372  2617          2617
7373  0000          0
```

```
                        *7400
7400  7524  CP1,       -254
7401  0272  CO,        272
7402  7540  IP,        -240
7403  0240  IPAC,      240
7404  7477  A,         -301
7405  7642  AC1,       AC2
7406  7646  AC3,       AC4
7407  7476  B,         -302
7410  7471  G,         -307
7411  7520  CHK1,      -260
7412  4167  JMPIN,     JMS JMPI
7413  7521  CLACH,     -257
7414  0136  NUM2,      NUM1
7415  0277  QUEIT,     277
7416  7300  BEGIN,     CLA CLL
7417  4172             CALL
7420  7706             SETUP
7421  4172             CALL
7422  7230             CRLF
7423  1201             TAD CO
7424  4172             CALL
7425  7742             PRINT
7426  7300             CLA CLL
7427  3130             DCA NUM
7430  4172             CALL
7431  7206             PACKS
7432  4172  NEXT,      CALL
7433  7747             READ
7434  1127             TAD CHAR
7435  1202             TAD CP
7436  7450             SNA
7437  5256             JMP DISP
7440  7200             CLA
7441  1127             TAD CHAR
7442  1207             TAD B
7443  7650             SNA CLA
7444  5333             JMP BKPT
7445  1127             TAD CHAR
7446  1210             TAD G
7447  7650             SNA CLA
7450  5606             JMP I AC3
7451  1127             TAD CHAR
7452  1204             TAD A
7453  7650             SNA CLA
7454  5605             JMP I AC1
7455  5361             JMP FAULT
7456  7100  DISP,      CLL
7457  4172             CALL
7460  7614             OUTC
7461  4172  NEXT1,     CALL
7462  7747             READ
7463  1130             TAD NUM
7464  3136             DCA NUM1
7465  1127             TAD CHAR
7466  1213             TAD CLACH
7467  7650             SNA CLA
7470  5276             JMP MOD
7471  1127             TAD CHAR
7472  1200             TAD CP1
7473  7650             SNA CLA
7474  5312             JMP MOD1
7475  5361             JMP FAULT
```

```
7476  3130  CD,     DCA NUM
7477  4172           CALL
7500  7206           RACKO
7501  4172           CALL
7502  7747           READ
7503  1127           TAD CHAR
7504  1200           TAD CP1
7505  7850           CMA CLA
7506  5310           JMP MOD2
7507  5361           JMP FAULT
7510  1130  MOD2,   TAD NUM
7511  3536           DCA I NUM1
7512  1136  MOD1,    TAD NUM1
7513  7001           IAC
7514  3136           DCA NUM1
7515  1214           TAD NUM2
7516  3130           DCA NUM
7517  4172           CALL
7520  7230           CRLF
7521  4172           CALL
7522  7614           OUTS
7523  1203           TAD SPAC
7524  4172           CALL
7525  7742           PRINT
7526  1136           TAD NUM1
7527  3130           DCA NUM
7530  4172           CALL
7531  7614           OUTS
7532  5261           JMP NEXT1
7533  1135  BKPT,    TAD INSTR
7534  3526           DCA I LOC
7535  1130           TAD NUM
7536  3136           DCA LOC
7537  1530           TAD I NUM
7540  3135           DCA INSTR
7541  1212           TAD JMPIN
7542  3530           DCA I NUM
7543  5216           JMP BEGIN
7544  3132  BKPT1,   DCA AC5
7545  1377           TAD AAC
7546  3130           DCA NUM
7547  7521           SWP
7550  3133           DCA MQ
7551  7004           RAL
7552  3134           DCA LINK
7553  4172           CALL
7554  7614           OUTS
7555  4172           CALL
7556  7230           CRLF
7557  5216           JMP BEGIN
7560  0200  STK,     200
7561  1360  FAULT,   TAD STK
7562  3176           DCA 176
7563  1215           TAD QUEST
7564  4172           CALL
7565  7742           PRINT
7566  5216           JMP BEGIN

7567  7004  J4,      RAL
7570  7006           RTL
7571  7004           RAL
7572  7006           RTL
7573  7004           RAL
7574  7006           RTL
7575  5776           JMP I .+1
```

```
                        *7577
7577  0132  AAC,        AC5
7600  1130              TAD NUM
7601  3130              DCA NUM
7602  1131              TAD NCTR1
7603  7001              IAC
7604  7001              IAC
7605  3131              DCA NCTR1
7606  5607              JMP I .+1
7607  7212              BEG
7610  7625  JSAI,       J5
7611  7773  NCTRI,      7773
7612  0007  OCTMKI,     7
7613  0260  ZERO,       260
7614  1210  OUTS,       TAD JSAI
7615  3131              DCA NCTR1
7616  1211              TAD NCTRI
7617  3005              DCA CTR
7620  2005  OUTS1,      ISZ CTR
7621  5223              JMP OUTS2
7622  5575              RETURN
7623  1530  OUTS2,       TAD I NUM
7624  5531              JMP I NCTR1
7625  7010  J5,         RAR
7626  7012              RTR
7627  7010              RAR
7630  7012              RTR
7631  7010              RAR
7632  7012              RTR
7633  0212              AND OCTMKI
7634  1213              TAD ZERO
7635  4172              CALL
7636  7742              PRINT
7637  2131              ISZ NCTR1
7640  2131              ISZ NCTR1
7641  5220              JMP OUTS1
7642  1130  AC2,        TAD NUM
7643  3132              DCA AC5
7644  5645              JMP I .+1
7645  7416              BEGIN
7646  4172  AC4,        CALL
7647  7230              CRLF
7650  1134              TAD LINK
7651  7010              RAR
7652  7200              CLA
7653  1133              TAD MQ
7654  7421              MQL
7655  1132              TAD AC5
7656  5530              JMP I NUM
7657  3177  CALLY,      DCA AC
7660  2176              ISZ STACK
7661  1172              TAD CALLX
7662  7001              IAC
7663  3576              DCA I STACK
7664  1572              TAD I CALLX
7665  3172              DCA CALLX
7666  1177              TAD AC
7667  5572              JMP I CALLX
7670  3177  RETY,       DCA AC
7671  1576              TAD I STACK
7672  3172              DCA CALLX
7673  7080              CMA CML
7674  1176              TAD STACK
7675  3176              DCA STACK
7676  1177              TAD AC
```

```
7700  4360  CPEGBA,  -1360
7701  4600  CPEGBB,  4600
7702  7342  CODE,    JMII-1
7703  0136  COD,     136
7704  7747  CT,      -31
7705  7761  CD,      JII-1
7706  6421  SETUP,   PWT
7707  6420           KPD
7710  7200           CLA
7711  6445           WCPAB
7712  6435           WCPAA
7713  1301           TAD CPEGBB
7714  6455           WCPBB
7715  7200           CLA
7716  1300           TAD CPEGBA
7717  6435           WCPBA
7720  7200           CLA
7721  1304  TAD CT
7722  3005           DCA CTR
7723  1302           TAD CODE
7724  3010           DCA 10
7725  1303           TAD COD
7726  3011           DCA 11
7727  1410  XX,      TAD I 10
7730  7040           CMA
7731  7450           IAC
7732  5526           JMP I LOC
7733  7040           CMA
7734  3411           DCA I 11
7735  2005           ISZ CTR
7736  5327           JMP XX
7737  1305           TAD CD
7740  3010           DCA 10
7741  5327           JMP XX
7742  6423  PRINT,   PCK
7743  5342           JMP .-1
7744  6421           PWT
7745  7300           CLA CLL
7746  5575           RETURN
7747  7200  READ,    CLA
7750  6422           KCK
7751  5350           JMP .-1
7752  6420           KRD
7753  0361           AND .+6
7754  3127           DCA CHAR
7755  1127           TAD CHAR
7756  4172           CALL
7757  7742           PRINT
7760  5575           RETURN
7761  0377           377
7762  5571  JII,     JMP I CALLX-1
7763  7544           SHPT1
7764  0000           0
7765  5574           JMP I CALLX+2
7766  7657           CALLY
7767  7670           RETY
7770  0200           ITACK+2
7771  7777           7777
7772  1375  IT,      TAD BE
7773  3136           DCA LOC
7774  5306           JMP SETUP
7775  7416  BE,      BEGIN
```

```
                        *137
0137  0000  WT,         0
0140  5541              JMP I .+1
0141  2742              2742
0142  0000  RD,         0
0143  5544              JMP I .+1
0144  2754              2754
0145  0000  PUSH,       0
0146  5547              JMP I .+1
0147  2647              2647
0150  0000  MULF,       0
0151  5552              JMP I .+1
0152  2665              2665
0153  0000  ADDF,       0
0154  5555              JMP I .+1
0155  2633              2633
0156  0000  SUBF,       0
0157  5560              JMP I .+1
0160  2641              2641
0161  0000  DIVF,       0
0162  5563              JMP I .+1
0163  2625              2625
0164  0000  FLT,        0
0165  5566              JMP I .+1
0166  2617              2617
0167  0000  JMPI,       0
0170  5571              JMP I .+1
0171  7544              BKPT1
0172  0000  CALLX,      0
0173  5574              JMP I.+1
0174  7657              CALLY
0175  7670  RETX,       RETY
0176  0200  STACK,      .+2
0177  0000  AC,         0
                        /RAM
                        *126
0126  0000  LOC,        0
0127  0000  CHAR,       0
0130  0000  NUM,        0
0131  0000  NCTR1,      0
0132  0000  ACS,         0
0133  0000  MQ,         0
0134  0000  LINK,       0
0135  0000  INSTR,      0
0136  0000  NUM1,       0
```

```
                    /PRINT
                   /EQUATES
                   CALL=4172;
                    RETURN=5575;
                    BACTR=100;
                    AUTO=10;
                    ALPHA=102;
                    DICPR1=24;
                    DICPR2=25
                    BA=103;
                    S=123;
                    D=114;
                    O=115;
                    J=116;
                    T=117;
                    ROCTR=120;
                    ELCTR=121;
                    DICTR=122
                    A=77;
                    ADR=100;
                    ADR1=101;
                    C=124;
                    CTR3=47
                    DINC=1461;
                    WCRAA=6425;
                    BW2=6451;
                    DISCO=3234
                   /CONSTANTS
                   *5000
5000  0037         MSK1, 37;
5001  4000          DIGIT, 4000;
5002  7775          FOURM, -3;
5003  0017          MSK2, 17;
5004  5236          DOTIM, DOTS
5005  5256          CHARM, CHAR;
5006  0102          BAA, BA-1
5007  7776           RO, -2;
5010  7772          ROS, -6;
5011  7773          EL, -5;
5012  7771          DP, -7;
5013  0040          PWR, 40;
5014  0004          FOUR, 4
5015  5212          PEE12, P12;
5016  5204          PEE14, P14;
5017  5103          PES, P5
5020  4172         PPINT, CALL;
5021  5400          PON;
5022  3120          DCA ROCTR;
5023  3121          DCA ELCTR;
5024  7300          CLA CLL
5025  1206          TAD BAA;
5026  3010          DCA AUTO;
```

```
5030  7430   CCL;
5031  7002   BSW;
5032  0200   AND MSK1;
5033  3410   DCA I AUTO;
5034  7630   CCL CLA
5035  5240   JMP P2;
5036  7120   STL;
5037  5227   JMP P1;
5040  1025  P2, TAD DISPP2;
5041  4172   CALL;
5042  5443   DISSUB;
5043  1024   TAD DISPP1;
5044  4172   CALL;
5045  5443   DISSUB
5046  1214   TAD FOUR;
5047  4172   CALL;
5050  3234   DISCO
5051  1217  START, TAD PES;
5052  3101   DCA ADR1
5053  7330  P6, CLA STL RAR;
5054  3114   DCA D;
5055  3122   DCA DISTR;
5056  1206   TAD BAA;
5057  3010   DCA AUTO
5060  1410  P11, TAD I AUTO;
5061  7104   CLL RAL;
5062  1205   TAD CHARM;
5063  3117   DCA T;
5064  1120   TAD ROSTR;
5065  1202   TAD FOURM
5066  7640   SZA CLA;
5067  5272   JMP .+3;
5070  1217   TAD PES;
5071  3101   DCA ADR1;
5072  7620   SNL CLA
5073  5275   JMP .+2;
5074  2117   ISZ T;
5075  1517   TAD I T;
5076  5501   JMP I ADR1
5077  7012  P4, RTR;
5100  7012   RTR;
5101  7012   RTR;
5102  7012   RTR
5103  0203  P5, AND MSK2;
5104  1204   TAD DOTSM;
5105  3100   DCA ADR;
5106  1201   TAD DIGIT;
5107  6425   WCPAA
5110  7200   CLA;
5111  1114   TAD D;
5112  6451   BW2
5113  7201  P20, CLA IAC;
5114  3124   DCA C;
5115  3121   DCA ELCTR
5116  6425  P8, WCPAA
5117  1124  P9, TAD C;
5120  0500   AND I ADR;
5121  7450   SNA;
5122  5327   JMP P7;
5123  1213   TAD PWR;
5124  6451   BW2;
5125  4172   CALL;
5126  5412   BURN
```

```
5130  7104   CLL RAL;
5131  3124   DCA C;
5132  2121   ISZ ELCTR;
5133  1121   TAD ELCTR
5134  1211   TAD EL;
5135  7640   SZA CLA;
5136  5317   JMP P9;
5137  3121   DCA ELCTR
5140  2122  P10, ISZ DICTR;
5141  1114   TAD D;
5142  7110   CLL RAR;
5143  3114   DCA D;
5144  1122   TAD DICTR
5145  1207   TAD P0;
5146  7650   SNA CLA;
5147  5340   JMP P10;
5150  1201   TAD DIGIT;
5151  6425   WCRAA;
5152  7200   CLA
5153  1114   TAD D;
5154  6451   BWZ;
5155  7200   CLA;
5156  1122   TAD DICTR;
5157  1212   TAD DP;
5160  7640   SZA CLA;
5161  5616   JMP I PEE14
5162  1120   TAD ROCTR;
5163  7640   SZA CLA;
5164  5340   JMP P10;
5165  1204   TAD DOTSM
5166  7001   IAC;
5167  7001   IAC;
5170  3100   DCA ADF;
5171  5313   JMP P20


            *5200
5200  7776  ROT, -2;
5201  7766   DI, -12;
5202  7772   ROSN, -6;
5203  5053   PEE6, P6
5204  1201  P14, TAD DI;
5205  1122   TAD DICTR;
5206  7650   SNA CLA;
5207  5212   JMP P12;
5210  5611   JMP I .+1;
5211  5060   P11
5212  1101  P12, TAD ADR1;
5213  1200   TAD ROT;
5214  3101   DCA ADR1
5215  2120   ISZ ROCTR;
5216  4172   CALL;
5217  5424   MOTOR;
5220  1202   TAD ROSN;
5221  1120   TAD ROCTR;
5222  7640   SZA CLA
5223  5603   JMP I PEE6;
5224  4172   CALL;
5225  5424   MOTOR;
5226  4172   CALL;
5227  5424   MOTOR;
5230  6451   BWZ;
5231  5575   RETURN
```

```
                 DOT AND CHARACTOR TABLE
                 .5236
5236  0060       DOTO, 60; /includes bit 6 for power on
5237  0050        50;
5240  0044        44;
5241  0041        41;
5242  0052        52;
5243  0061        61;
5244  0062        62;
5245  0051        51;
5246  0045        45;
5247  0056        56;
5250  0063        63;
5251  0071        71;
5252  0065        65;
5253  0076        76;
5254  0057        57;                          BRANCH ADDRESS
5255  0077        77
5256  5131       CHAR, 5131;   "0"             0₈
5257  4674        4674;
5260  1042        1042;        "2"             2₈
5261  1042        1042;
5262  1157        1157;
5263  4521        4521;
5264  0016        0016;        "3"             3₈
5265  7015        7015;
5266  7400        7400;        "4"             4₈
5267  2525        2525;
5270  0016        0016;        "5"             5₈
5271  7476        7476
5272  2531        2531;        "6"             6₈
5273  4476        4476;
5274  0442        0442;        "7"             7₈
5275  7400        7400;
5276  2531        2531;        "8"             10₈
5277  4531        4531;
5300  6411        6411;        "9"             11₈
5301  4525        4525;
5302  7525        7525;        "A"             12₈
5303  1105        1105;                                putting 1312 into 0102  prints
5304  3156        3156;        "B"             13₈     xxxx.xx
5305  7151        7151
5306  3156        3156;        "D"             14₈     DISPR2 DISPR1
5307  7146        7146
5310  1477        1477;        "E"             15₈
5311  7476        7476;
5312  2525        2525;        "H"             16₈
5313  2537        2537;
5314  1051        1051;        "I"             17₈
5315  4442        4442;
5316  1477        1477;        "L"             20₈
5317  1463        1463;
5320  5525        5525;        "N"             21₈
5321  2654        2654;
5322  4165        4165;        "R"             22₈
5323  7136        7136
5324  0016        0016;        "S"             23₈
5325  4471        4471;
5326  1042        1042;        "T"             24₈
5327  7442        7442;
5330  2102        2102;        "V"             25₈
5331  2525        2525;
5332  7777        7777;                        26₈
5333  7777        7777         ROOM FOR 18 MORE CHARACTERS
```

```
                CTR4=72
                *5400;
5400  7300     PON, CLA CLL;
5401  6425      WCRAA;
5402  1266      TAD PWRI;
5403  6451      BW2
5404  7200      CLA;
5405  1265      TAD DEL
5406  3072      DCA CTR4;
5407  2072      ISZ CTR4;
5410  5207      JMP .-1;
5411  5575      RETURN;
5412  7200     BURN, CLA;
5413  1264      TAD BRST;
5414  6425      WCRAA;
5415  7200      CLA
5416  1263      TAD BUR;
5417  3047      DCA CTR3;
5420  2047      ISZ CTR3;
5421  5220      JMP .-1;
5422  6425      WCRAA;
5423  5575      RETURN;
5424  7200     MOTOR, CLA;
5425  1271      TAD MOT
5426  6425      WCRAA;
5427  7200      CLA;
5430  1270      TAD MOTO;
5431  3047      DCA CTR3;
5432  6451     MOT1, BW2;
5433  1267      TAD MOTIM;
5434  3072      DCA CTR4;
5435  2072      ISZ CTR4
5436  5235     JMP .-1;
5437  2047      ISZ CTR3;
5440  5232      JMP MOT1;
5441  6425      WCRAA;
5442  5575      RETURN;
5443  3077     DISSUB, DCA A;
5444  1273      TAD THR
5445  3047      DCA CTR3;
5446  1077     DISS, TAD A;
5447  0272      AND MSK;
5450  7104      CLL RAL;
5451  7006      RTL;
5452  7006      RTL;
5453  3410      DCA I AUTO;
5454  1077      TAD A
5455  7006      RTL;
5456  7006      RTL;
5457  3077      DCA A;
5460  2047      ISZ CTR3
5461  5246      JMP DISS;
5462  5575      RETURN
5463  5577     BUR, 5577;
5464  7000      BRST, 7000;
5465  0320      DEL, 320;
5466  0040      PWRI, 40;
5467  7300      MOTIM, 7300
5470  7774      MOTO, -4;
5471  2000      MOT, 2000;
5472  7400      MSK, 7400;
5473  7775      THR, -3
```

```
                  /IC, BIT AND CURVEY PRINT ROUTINES

                  CALL=4172;
                   RETURN=5575;
                   ALPHA=102;
                   INIT1=6433;
                   RESTR1=6445
                  CURV1=6456;
                   AUTO1=13;
                   AUTO2=14;
                   CTR6=15;
                   STOR=30

                  *4400
4400   7200   INCO, CLA;
4401   1211    TAD INI;
4402   3102    DCA ALPHA;
4403   1334    TAD ADD2;
4404   3030    DCA STOR;
4405   4172    CALL;
4406   4436    PRINIT;
4407   5610    JMP I .+1
4410   6433    INIT1;
4411   2117    INI, 2117

4412   7200   BIT, CLA;
4413   1223    TAD B3;
4414   3102    DCA ALPHA;
4415   1333    TAD ADD3;
4416   3030    DCA STOR;
4417   4172    CALL;
4420   4436    PRINIT;
4421   5622    JMP I .+1
4422   6445    RESTR1;
4423   2322    B3, 2322

4424   7200   SUR, CLA;
4425   1234    TAD SV;
4426   3102    DCA ALPHA;
4427   3030    DCA STOR;
4430   4172    CALL;
4431   4436    PRINIT;
4432   5633    JMP I .+1;
4433   6456    CURV1;
4434   2523    SV, 2523
```

```
                    ITEST
                   CALL=4172;
                    RETURN=5575;
                    AON=5440;
                    LON=4620;
                    LON1=4622;
                    DIS3=3672
                    AUTO=17;
                    ITCLK=6600;
                    IONOP=6047;
                    WORAB=6445;
                    WORBB=6455;
                    DATA=2405
                    SCDATA=6305;
                    BSS=6443;
                    M=4150;
                    W=4137;
                    CTR3=47;
                    CTR4=16;
                    TEMN=101
                    R=4142;
                    TEMP=100;
                    DISPR1=24;
                    DISPR2=25;
                    CONV=6014;
                    LOR=3154
                    STPRT=5046;
                    ELCTR=121;
                    POCTR=120;
                    PON=5400;
                    STSTD=6411;
                    STSTC=6417
                    APUOP=6600;
                    STC=6270
                   *5600
5600  7200   STEST, CLA;
5601  1366    TAD EIGHT;
5602  3024    DCA DISPR1;
5603  1365    TAD EIGHTS
5604  3025    DCA DISPR2;
5605  4172    CALL;
5606  3672    DIS3;
5607  7200    CLA;
5610  1356    TAD FIV;
5611  4172    CALL;
5612  5340    DELAY;
5613  4172    CALL;
5614  3154    LOR;
5615  1327    TAD SIXT;
5616  3047   DCA CTR3
5617  1331    TAD DATAA;
5620  3017    DCA AUTO;
5621  1330   CT1, TAD TWEL;
5622  3016    DCA CTR4
5623  1417    TAD I AUTO;
```

```
5624  6147   [illegible]
5625  6600   ITCLK;
5626  7010   RAR;
5627  2047    ISZ CTR3;
5630  5232   JMP .+2;
5631  5236   JMP .+5
5632  2016   ISZ CTR4;
5633  5224   JMP IT2;
5634  7200   CLA;
5635  5221   JMP ST1;
5636  7200   CLA
5637  1352   TAD CONNC;
5640  6445   WCRAB;
5641  7200   CLA;
5642  1355   TAD FIF;
5643  4172   CALL;
5644  5340   DELAY
5645  1353   TAD BONNC;
5646  6445   WCRAB;
5647  7200   CLA;
5650  1356   TAD FIV;
5651  4172   CALL;
5652  5340   DELAY
5653  1354   TAD DATS;
5654  6445   WCRAB;
5655  7200   CLA;
5656  6007   CAF;
5657  6443   BSB;
5660  5257   JMP .-1
5661  5662   JMP I .+1;
5662  6411   STSTD;
5663  7200  PET, CLA;
5664  1326   TAD NUMR;
5665  3017   DCA AUTO;
5666  1362   TAD TEN;
5667  3016   DCA CTR4
5670  1325  BACK, TAD BLK;
5671  3417   DCA I AUTO;
5672  2016   ISZ CTR4;
5673  5270   JMP BACK
5674  4172   CALL;
5675  5400   PON;
5676  3121   DCA ELCTR;
5677  3120   DCA RDCTR;
5700  4172   CALL;
5701  5046   ITRRT
5702  4172   CALL;
5703  6270   ST2;
5704  6600   RPUCF;
5705  7200   CLA;
5706  1362   TAD TEN;
5707  3100   DCA TEMP;
5710  1357   TAD CHAN
5711  3101   DCA TEMN;
5712  4172  DICP, CALL;
5713  6417   ITITC;
5714  1362   TAD TEN;
5715  4172   CALL;
5716  5340   DELAY
5717  1101   TAD TEMN;
5720  1363   TAD FOUR;
5721  3101   DCA TEMN;
5722  2100   ISZ TEMP;
5723  5312   JMP DICP;
5724  5764   JMP I RDTRED
```

```
5725  0026  BLK, 26;
5726  0102   NUMR, 102
5727  7400  CINT, -400;
5730  7764   TWEL, -14;
5731  5731   DATAA, .;
5732  5415     5415;
5733  0323     0323;
5734  7473     7473;
5735  7777     7777;
5736  7777     7777
5737  7774    7774;
5740  1475    1475;
5741  1467    1467;
5742  4643    4643;
5743  3111    3111;
5744  0226    0226;
5745  3100    3100;
5746  2146    2146;
5747  1146    1146;
5750  2463    2463;
5751  5314    5314
5752  2000  CSYNC, 2000;
5753  4000   BSYNC, 4000;
5754  6000   DATS, 6000;
5755  7563   FIF, -215
5756  7721   FIV, -57;
5757  0243   CHAN, 243;
5760  2024   TWO, 2024;
5761  0567   DEBUG, 567;
5762  7766   TEN, -12;
5763  0004   FOUR, 4;
5764  7100   FDTREC, 7100
5765  0210  EIGHTS, 210;
5766  4210   EIGHT, 4210
            *5340
            DELAY
5340  3047  DELAY, DCA CTR3;
5341  3016   DCA CTR4;
5342  2016   ISZ CTR4;
5343  5342   JMP .-1;
5344  2047   ISZ CTR3;
5345  5342   JMP .-3;
5346  5575   RETURN
```

```
/PROM BURNER
/PUT HIGH ADR IN 1000
/PUT LOW ADR IN 1001
/PUT PROM START ADR IN 1002
/ENTER 1200 FOR WRITE
/THEN, PRESS "C" TO READ, OR ,
/ENTER 1230 FOR READ
/BELL RINGS ON ERROR, PRINTS D IF OK
/ERROR LOC IS IN 1025, PROM DATA IS IN 1023,
/        "SHOULD BE" IS IN 1021.
/HALTS AFTER START TO GIVE TIME FOR -40V, 100MA LIMIT
/        VOLTAGE TO BE TURNED ON.

PCK=6113
PWT=6111
WCRA=6465
WCRB=6475
P1=6460
W1=6461

*1000
1000   0000   HI,      0
1001   0000   LO,      0
1002   0000   PROM,    0
1003   0360   W,       360
1004   6400   F1,      6400
1005   7400   F2,      7400
1006   2400   F3,      2400
1007   0400   F4,      400
1010   6000   F5,      6000
1011   0207   BELL,    207
1012   0304   D,       304
1013   0000   JUM,     0
1014   1064   J1,      JUMP
1015   7776   HUN,     -2
1016   0000   CTR1,    0
1017   5513   C15,     5513
1020   7133   C5,      7133
1021   0000   HLD,     0
1022   0000   CTR,     0
1023   0000   HLD1,    0
1024   0000   L,       0
1025   0000   P,       0
1026   0017   MASK,    17
```

1200 G must be executed before turning on 40 vo

To step in the middle of a burn, turn off -40 v
first, then hit break.

```
1030  6111          RWT
1031  1203          TAD W
1032  6475          WCRB
1033  7200          CLA
1034  1202          TAD PPOM
1035  3225          DCA P
1036  1201          TAD LO
1037  3224          DCA L
1040  1204          TAD F1
1041  6465          WCRA
1042  7402  FB,     HLT
1043  7200  P6,     CLA
1044  1215          TAD HUN
1045  3216          DCA CTR1
1046  7604  P5,     LAS
1047  1214          TAD J1
1050  3213          DCA JUM
1051  1225          TAD P
1052  6461          W1
1053  7200          CLA
1054  1205          TAD F2
1055  6465          WCRA
1056  7200          CLA
1057  1204          TAD F1
1060  6465          WCRA
1061  7200          CLA
1062  1624          TAD I L
1063  5613          JMP I JUM
1064  7012  JUMP,    RTR
1065  7012          RTR
1066  7012          RTR
1067  7012          RTR
1070  0226          AND MASK
1071  3221          DCA HLD
1072  1221  JUMP1,   TAD HLD
1073  6461          W1
1074  7200          CLA
1075  1206          TAD F3
1076  6465          WCRA
1077  7200          CLA
1100  1207          TAD F4
1101  6465          WCRA
1102  7200          CLA
1103  1217          TAD C15
1104  3222          DCA CTR
1105  2222  P1,     ISZ CTR
1106  5305          JMP P1
1107  1206          TAD F3
1110  6465          WCRA
1111  7200          CLA
1112  1220          TAD C5
1113  3222          DCA CTR
1114  2222  P2,     ISZ CTR
1115  5314          JMP P2
```

```
1116  1204  F21.   TAD F1
1117  6465        WCRA
1120  7200        CLA
1121  1210        TAD F5
1122  6465        WCRA
1123  6460        F1
1124  0226        AND MASK
1125  3223        DCA HLD1
1126  1204        TAD F1
1127  6465        WCRA
1130  7200        CLA
1131  1221        TAD HLD
1132  7041        CMA IAC
1133  1223        TAD HLD1
1134  7640        SZA CLA
1135  5337        JMP P3
1136  5346        JMP P4
1137  2216  P3.   ISZ CTR1
1140  5246        JMP P5
1141  1211  F31.  TAD BELL
1142  6113        PCK
1143- 5342        JMP .-1
1144  6111        PWT
1145  7402        HLT
1146  2225  P4.   ISZ P
1147  2224        ISZ L
1150  7000        NOP
1151  1200        TAD HI
1152  7040        CMA
1153  1224        TAD L
1154  7640        SZA CLA
1155  5243        JMP P6
1156  1212        TAD D
1157  6113        PCK
1160  5357        JMP .-1
1161  6111        PWT
1162  7402        HLT
1163  6111        6111
1164  6113        6113
1165  7000        NOP
1166  5767        JMP I .+1
1167  1230        READ

                  T=TAD BELL
                  H=TAD HLD
                  J4=JMP P4
                  J=JMP F21

                  *1200
```

```
1200   7200   WRITE,   CLA
1201   1216            TAD C7
1202   3615            DCA I C6
1203   1214            TAD C5
1204   3613            DCA I C4
1205   1221            TAD C10
1206   3620            DCA I C9
1207   5612            JMP I C3

1210   1211   C1,      T
1211   5316   C2,      J
1212   1027   C3,      BEGIN
1213   1072   C4,      JUMP1
1214   1221   C5,      H
1215   1141   C6,      F31
1216   5346   C7,      J4
1217   7000   C8,      NOP
1220   1042   C9,      FB
1221   7402   C10,     HLT
                       *1230

1230   7200   READ,    CLA
1231   1211            TAD C2
1232   3613            DCA I C4
1233   1210            TAD C1
1234   3615            DCA I C6
1235   1217            TAD C8
1236   3620            DCA I C9
1237   5612            JMP I C3

        ONES FILLER
       /HI ADR IN 400
       /LO ADR IN 401

                       *400

0400   0000   HIGH,    0
0401   0000   LOW,     0
0402   7200   ONES,    CLA
0403   1201            TAD LOW
0404   3010            DCA 10
0405   7040   ON,      CMA
0406   3410            DCA I 10
0407   1200            TAD HIGH
0410   7040            CMA
0411   1010            TAD 10
0412   7640            SZA CLA
0413   5205            JMP ON
0414   7402            HLT
```

GENERAL DISCUSSION

Consider a right-handed rectangular coordinate system X, Y, Z, defined by the local magnetic north direction (X-axis) with the Z direction being the local gravitationally defined vertical.

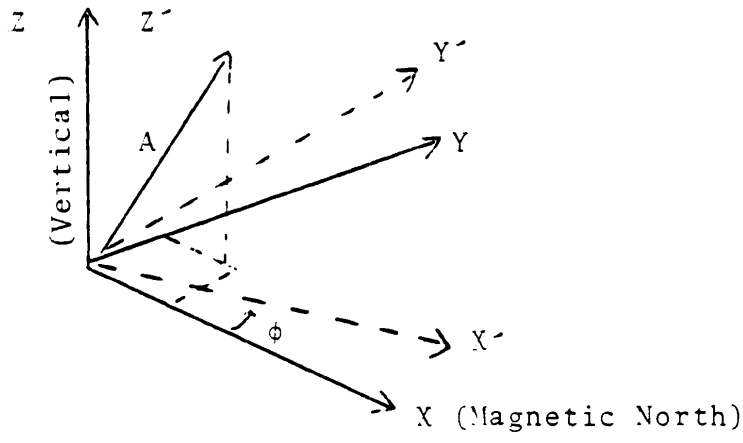

Figure 1

Let the components of an arbitrary vector $\vec{A}$ be given by A_x, A_y, and A_z in this coordinate system. Our first objective is to be able to calculate the components of this vector in another right-handed coordinate system defined by three successive and independent rotations:

a. A rotation ϕ about the Z axis $(-\pi \leq \phi \leq +\pi)$
b. A rotation θ about the new Y' axis $(-\pi/2 \leq \theta \leq \pi/2)$
c. A rotation ψ about the new X'' axis $(-\pi \leq \psi \leq \pi)$

Prepared by Walter Hernandez, Ph.D., Chief Scientist, ENSCO ESS/SAS Divisions.

Let $\vec{A}'$ denote the components of $\vec{A}$ in the new coordinate system defined by the first rotation about Z axis of Figure 1. Then we have:

$$
\begin{aligned}
A'_z &= A_z \\
A'_x &= A_x\cos\phi + A_y\sin\phi \qquad (1) \\
A'_y &= -A_x\sin\phi + A_y\cos\phi
\end{aligned}
$$

Next, let A'' denote the components of $\vec{A}$ in the coordinate system defined by the second rotation about the Y' axis (see figure below).

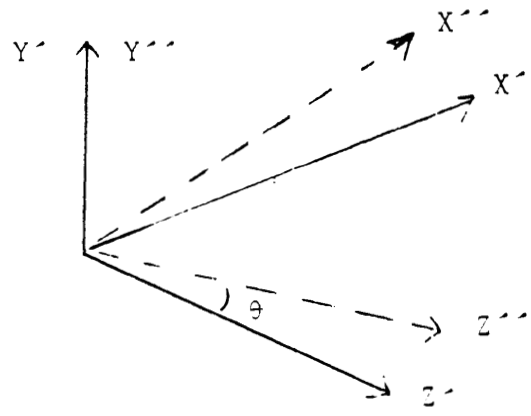

Figure 2

Thus:

$$
\begin{aligned}
A''_y &= A'_y \\
A''_z &= A'_z\cos\theta + A'_x\sin\theta \qquad (2) \\
A''_x &= -A_z\sin\theta + A'_x\cos\theta
\end{aligned}
$$

Finally, let $\vec{A}'''$ denote the components of $\vec{A}$ in the coordinate system defined by the third rotation about the X'' axis (see figure below).

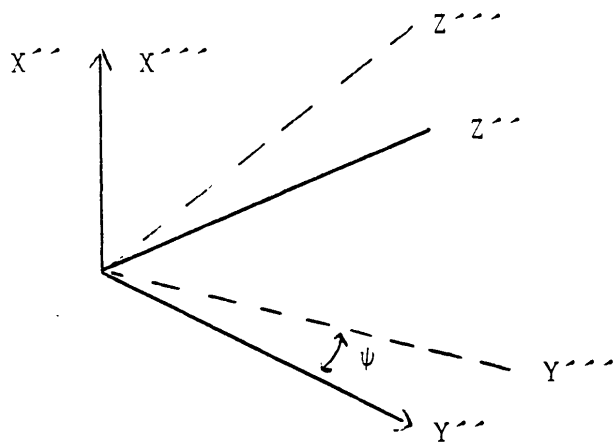

Figure 3

Again we have:

$$
\begin{aligned}
A_x''' &= A_x'' \\
A_y''' &= A_y''\cos\psi + A_z''\sin\psi \qquad (3) \\
A_z''' &= -A_y''\sin\psi + A_z''\cos\psi
\end{aligned}
$$

In matrix form, these rotations can be expressed as

$$\vec{A}' = [R_\phi]\vec{A}$$
$$\vec{A}'' = [R_\theta]\vec{A}' \qquad (4)$$
$$\vec{A}''' = [R_\psi]\vec{A}''$$

where the R's are defined by the above equations.

$$R_\phi = \begin{bmatrix} \cos\phi & \sin\phi & 0 \\ -\sin\phi & \cos\phi & 0 \\ 0 & 0 & 1 \end{bmatrix}$$

$$R_\theta = \begin{bmatrix} \cos\theta & 0 & -\sin\theta \\ 0 & 1 & 0 \\ \sin\theta & 0 & \cos\theta \end{bmatrix} \qquad (5)$$

$$R_\psi = \begin{bmatrix} 1 & 0 & 0 \\ 0 & \cos\psi & \sin\psi \\ 0 & -\sin\psi & \cos\psi \end{bmatrix} .$$

The transformation from $\vec{A}$ to the final $\vec{A}'''$ is defined by:

$$\vec{A}''' = [R_\psi][R_\theta][R_\phi]\vec{A} \qquad (6)$$

Thus the matrix product

$$[R] = [R_\psi][R_\theta][R_\phi] \tag{7}$$

defines the general matrix for transforming coordinates from the initial to final coordinate system. Performing the successive matrix multiplications yields:

$$[R] = \begin{bmatrix} \cos\theta\cos\phi & \cos\theta\sin\phi & -\sin\theta \\ -\cos\psi\sin\phi + \sin\psi\sin\theta\cos\phi & \cos\psi\cos\phi + \sin\psi\sin\theta\sin\phi & \sin\psi\cos\phi \\ \sin\psi\sin\phi + \cos\psi\sin\theta\cos\phi & -\sin\psi\cos\phi + \cos\psi\sin\theta\sin\phi & \cos\psi\cos\theta \end{bmatrix} \tag{8}$$

Our second objective is the following. Let the local magnetic field $\vec{F}$ be defined and known in the (XYZ) coordinate system as

$$\begin{aligned} F_x &= F\cos\alpha \\ F_y &= 0 \\ F_z &= -F\sin\alpha \end{aligned} \tag{9}$$

where α=dip angle ($0 \leq \alpha \leq \pi/2$). F_y is zero since the X-axis is defined as the magnetic north. Let the local gravitational field be known and defined as

$$\begin{aligned} G_x &= 0 \\ G_y &= 0 \\ G_z &= -G \end{aligned} \tag{10}$$

Now assume that we are given measured components of $\vec{F}$ along the $(X'''Y'''Z''')$ coordinate system (or the direction cosines since magnitude F is known). Also, we are given the components of $\vec{G}$ along the $(X'''Y'''Z''')$ coordinate system.

From this information we are to estimate the values of the rotation parameter ϕ, θ, and ψ. That is, calculate the orientation of the $(X'''Y'''Z''')$ coordinate system.

Using the rotation matrix [R] given by equation (8), we get for the magnetic field components

$$
\begin{aligned}
X\cos &= \cos\theta\cos\phi\cos\alpha + \sin\theta\sin\alpha \\
Y\cos &= -\cos\psi\sin\phi\cos\alpha + \sin\psi[\sin\theta\cos\phi\cos\alpha-\cos\theta\sin\alpha] \\
Z\cos &= +\sin\psi\sin\phi\cos\alpha + \cos\psi[\sin\theta\cos\phi\cos\alpha-\cos\theta\sin\alpha]
\end{aligned}
\tag{11}
$$

where

$$
\begin{aligned}
X\cos &= F_x'''/F \\
Y\cos &= F_y'''/F \\
Z\cos &= F_z'''/F
\end{aligned}
\tag{12}
$$

For the gravitational field we get

$$G_x''' = (+\sin\theta)G \tag{13}$$

<u>θ PARAMETER</u>

Given the G_x''' and G values, equation (13) gives:

$$\theta = \sin^{-1}\left(\frac{G_x'''}{G}\right) \tag{14}$$

Given that G and G_x''' are well defined and $G>0$ and that θ is restricted to $-\pi/2 \leq \theta + \pi/2$, we have a valid and unique estimation for θ .

ϕ PARAMETER

The first equation of equations (11) can be solved for $\cos\phi$ as

$$\cos\phi = \frac{X\cos - \sin\theta\sin\alpha}{\cos\theta\cos\alpha} \tag{15}$$

where θ and α are known quantities.

The second and third of equations (11) are solved for $\sin\phi$:

$$Y\cos(\cos\psi) = -\cos^2\psi\sin\phi\cos\alpha + A$$

$$Z\cos(\sin\psi) = \sin^2\psi\sin\phi\cos\alpha + A$$

where: $A = \sin\psi\cos\psi[\sin\theta\cos\phi\cos X - \cos\theta\sin\alpha]$

subtracting the two, and solving for $\sin\phi$:

$$\sin\phi \quad \frac{\sin\psi Z\cos - \cos\psi Y\cos}{\cos\alpha}$$

$$\text{or } \phi = \tan^{-1}\left[\frac{\sin\phi}{\cos\phi}\right] \tag{16}$$

ψ PARAMETER

The ψ parameter is derived from the components of the $\vec{G}$ in the direction of G_Y and G_Z as follows:

$$\psi = \tan^{-1} \frac{-G_Y}{-G_Z}$$

θ is inclination $-\pi/2$, ϕ is bearing and ψ is package rotation.

NORMALIZATION

Each of the three sensor values from the magnetometers and the accelerometers must be normalized as in the following example:

$$Xcos_{norm} = \frac{Xcos}{\sqrt{Xcos^2 + Ycos^2 + Zcos^2}}$$

Therefore, all of the operational algorithms use normalized values.

THE SURVEY EQUATIONS

The following are used for survey equations. This is a straight line between points, angle averaging method, and the assumed rod length normally is 10 feet to minimize errors.

Survey

$$\cos(\overline{INC})\cos(\overline{BER})\ rod1 + LAT2 = LAT1$$

$$\cos(\overline{INC})\sin(\overline{BER})\ RODL + DEP2 = DEP1$$

$$VD2 - \sin(\overline{INC})\ RODL = VD1$$

$$\sqrt{(VD1)^2 + (LAT1)^2 + (DEP1)^2} = THD$$

$$\sin\left(TAN^{-1}\left(\frac{DEP1}{LAT1}\right) - ABER\right) \cdot \sqrt{(LAT1)^2 + (DEP1)^2} = HDEV$$

$$VD1 - \sin(AINC - \pi/2)\cos\left(TAN^{-1}\left(\frac{DEP1}{LAT1}\right) - ABER\right)\sqrt{(LAT1)^2 + (DEP1)^2} = VDEV$$

Initial Hole Conditions

$$\sin(AINC-\pi/2)SLEN = VD1$$

$$\sin(ABER)\cos(AINC - \pi/2)SLEN = DEP1$$

$$\cos(ABER)\cos(AINC - \pi/2)SLEN = LAT1$$

where

ABER = initial bearing
AINC = initial indication
$\overline{BER}$ = average bearing, previous survey and current survey
$\overline{INC}$ = average inclination, previous survey and current survey
VD1 = current vertical depth
VD2 = previous vertical depth
LAT1 = current latitude
LAT2 = previous latitude
DEP1 = current departure
DEP2 = previous departure
RODL = rod length
THD = tone hole depth
HDEV = horizontal deviation
VDEV = vertical deviation
SLEN = string length