RI 9646 REPORT OF INVESTIGATIONS/1998

Concluding Evaluation of a Continuous Haulage Guidance Sensor

U.S. DEPARTMENT OF HEALTH AND HUMAN SERVICES
Public Health Service
Centers for Disease Control and Prevention
National Institute for Occupational Safety and Health

Report of Investigations 9646

Concluding Evaluation of a Continuous Haulage Guidance Sensor

John J. Sammarco

U.S. DEPARTMENT OF HEALTH AND HUMAN SERVICES
Public Health Service
Centers for Disease Control and Prevention
National Institute for Occupational Safety and Health
Pittsburgh Research Laboratory
Pittsburgh, PA

November 1998

International Standard Serial Number
ISSN 1066-5552

CONTENTS

Page

Abstract . . . 1
Introduction . . . 2
Background . . . 2
Current operating scenario . . . 2
Proposed operating scenario . . . 3
Requirements analysis . . . 5
  Environmental requirements . . . 5
  Operational requirements . . . 5
Potential systems . . . 6
Candidate system . . . 6
Testing . . . 7
  Static tests . . . 7
  Dynamic tests . . . 8
Results . . . 10
  Static test results . . . 10
  Dynamic test results . . . 10
    Target loss tests . . . 10
    Accuracy analysis . . . 11
Other mining applications . . . 12
Future work . . . 13
Conclusions . . . 13
Acknowledgments . . . 13
References . . . 13
Appendix A.—DynaSight technical specifications . . . 14
Appendix B.—Machine tram characteristics . . . 15
Appendix C.—Serial communication details . . . 16

ILLUSTRATIONS

1. Room-and-pillar mining chevron pattern . . . 3
2. Loading zone for the continuous mining and haulage machines . . . 4
3. Crosscut parameters . . . 5
4. The DynaSight sensor . . . 7
5. Sensor and active target range of orientation . . . 7
6. Dynamic testing setup . . . 9
7. Raw and corrected data for a single active target oriented at 45° and without the optical window . . . 10
8. Testing in airborne dust showed less than 0.8% accuracy (worst case) degradation compared with accuracies at 0 mg/m^3 for a single active target . . . 10
9. Target loss for sump and shear . . . 11
10. Along-track comparison . . . 11
11. Sump distance accuracy . . . 12
C-1. Communications block diagram . . . 16
C-2. Sensor's coordinate system . . . 17

TABLES

1. Error data using the multitarget adapter . . . 11

UNIT OF MEASURE ABBREVIATIONS USED IN THIS REPORT

A	ampere	mm	millimeter
cm	centimeter	m/min	meter per minute
ft	foot	ppm	part per million
g	gram	s	second
Hz	hertz	V ac	volt, alternating current
in	inch	%	percent
m	meter	°	degree
mg/m^3	milligram per cubic meter		

Mention of any company name or product does not constitute endorsement by the National Institute for Occupational Safety and Health.

To receive additional information about mining issues or other occupational safety and health problems, call 1-800-35-NIOSH (1-800-356-4674), or visit the NIOSH Home Page on the World Wide Web at http://www.cdc.gov/niosh

CONCLUDING EVALUATION OF A CONTINUOUS HAULAGE GUIDANCE SENSOR

By John J. Sammarco[1]

ABSTRACT

The mining industry has the highest average annual fatality rate among major U.S. industries. To address this, the National Institute for Occupational Safety and Health, Pittsburgh Research Laboratory (PRL), is conducting major research programs to reduce the hazard exposure of miners. One of the recently concluded programs at PRL developed the enabling technology for remote-controlled mining. An application involves the manual process of extracting and hauling coal where operators, in the tight confines of a mine, can be struck or caught by mobile machinery. The approach to remedy this problem uses a guidance system on the continuous haulage equipment so that it follows the continuous mining machine that extracts coal. This, in essence, involves sensor-based docking of the machines. Sensors functioning in the hostile mine environment of dust, methane gas, and water play the key role. Computer analysis of the mining machine's movements and empirical machine characterizations established operating requirements and spatial limitations to ensure proper loading of coal into the haulage equipment. These data served in the selection of a guidance sensor. Technologies such as scanning laser systems and ultrasonic sensors have frequently been used in other applications, but were found unacceptable. However, a near-infrared sensor employing active targets met the requirements. The sensor has a nominal 75° conical field of view and a range from 0.1 to 18.0 m. For the single-target mode, nominal range accuracy was 4.3% at a distance of 3.65 m. Correction algorithms were generated, which reduced the error to 0.6%. Airborne dust testing showed less than an additional 0.8% accuracy (worst case) degradation at dust levels up to 15 mg/m^3. Using four targets, the nominal range accuracy was 0.4% without correction algorithms. Analysis of dynamic testing of a continuous miner and haulage showed that accuracy was maintained and total target loss did not occur. A guidance system for the haulage system to follow the mining machine does not exist commercially. Such a system can reduce fatalities, injuries, and exposure to dust and noise.

[1]Electrical engineer, Pittsburgh Research Laboratory, National Institute for Occupational Safety and Health, Pittsburgh, PA.

INTRODUCTION

Coal-fired generation plants provide about 60% of U.S. electricity, thus making the mining industry a vital part of our national interests. The mining of this coal is quite dangerous for workers. The mining industry has the highest annual average fatality rate among major U.S. industries, totaling 31.9 per 100,000 workers [NIOSH 1993].

To address this situation, a program was initiated to develop the enabling technology for a reduced exposure mining system (REMS) [McClelland et al. 1994].[2] The objectives were to reduce hazard exposure and improve the safety and health of miners working at the face, the most hazardous area of the mine. With REMS, sensor and computer technology enables operators to be placed at a safe distance from the working face. REMS research was concluded with an open industry briefing in September 1997.

BACKGROUND

REMS targets underground coal mining, specifically, room-and-pillar methods. Researchers integrated the extraction and haulage processes so that the coal can be properly loaded from the continuous mining machine into the continuous haulage system (CHS). This task requires the CHS to maintain a critical position and orientation as it follows the continuous miner (CM).

Positioning mobile equipment is not unique to mining; it is a generalized problem [Borenstein et al. 1995]. Sandia National Laboratories conducted research on sensor-based docking of large payloads [Drotning 1992]. Sensor-based programmable vehicles are used for the transport of hazardous materials and for operation in hazardous environments. Other applications involve military ground vehicle operations [Gage and Pletter 1987], where sensor-based vehicles follow a lead vehicle.

CURRENT OPERATING SCENARIO

Coal mining utilizes specialized methods and machines. A common method is known as "room-and-pillar" mining, in which tunnels are cut according to a predefined manner, such as a rectangular grid or a chevron pattern. Figure 1 depicts a small section of a chevron pattern and the equipment used for mining. The main tunnels are "main entries"; the side tunnels are "crosscuts." Main entries are 5.5 to 6.0 m wide; crosscuts are typically 5.5 m. The main entry distances between crosscuts are typically 18.2 m. The major stages of operation are initial alignment, advancing the face, turning crosscuts, and backing out of an entry.

1. *Initial alignment:* The CHS operator manually positions and controls the CHS behind the tail end of the CM by using a remote-control pendant. The objective is to have the tail end of the conveyor placed directly over the hopper car of the CHS, thus ensuring proper loading of coal.

2. *Advancement:* The operator, using a remote-control pendant, controls the CM to cut coal and advance the main entries and crosscuts. In developing the main entries, the CM makes two cuts to obtain the desired width. Crosscuts are developed after the main entries. During advancement of main entries and crosscuts, the CHS operator's job is to maintain the position of the hopper car under the CM's conveyor.

3. *Turning a crosscut:* The CM begins in the main entryway. To develop crosscuts, a considerable amount of positioning and maneuvering is needed because this involves a large machine in a tightly confined space. A typical "footprint" of the CM is 3.3 m by 6.0 m. Also, movement is restricted because the CHS follows closely behind.

4. *Backout:* The CM and CHS are backed out to begin the next set of cuts. The primary objective is to ensure that the two machines do not collide as they back out. The operators must work together to prevent this.

The CHS used in our research is a Joy 3FCT-4 machine. It is a flexible belt system that winds its way through the mine under control of an operator. The tail end discharges coal onto the section or main belt while the receiving end, called the hopper, is guided by the operator to follow the rear of the CM. Operators are in the dangerous area where the roof could fall and where they can be struck or pinned by moving machinery. This situation is made more dangerous because visibility is reduced by dust, obstructions, and low levels of light. Significant levels of noise, especially during the cutting of coal, can impair hearing and communication between the operators.

[2]This research originated under the former U.S. Bureau of Mines prior to transferring to the National Institute for Occupational Safety and Health in 1996.

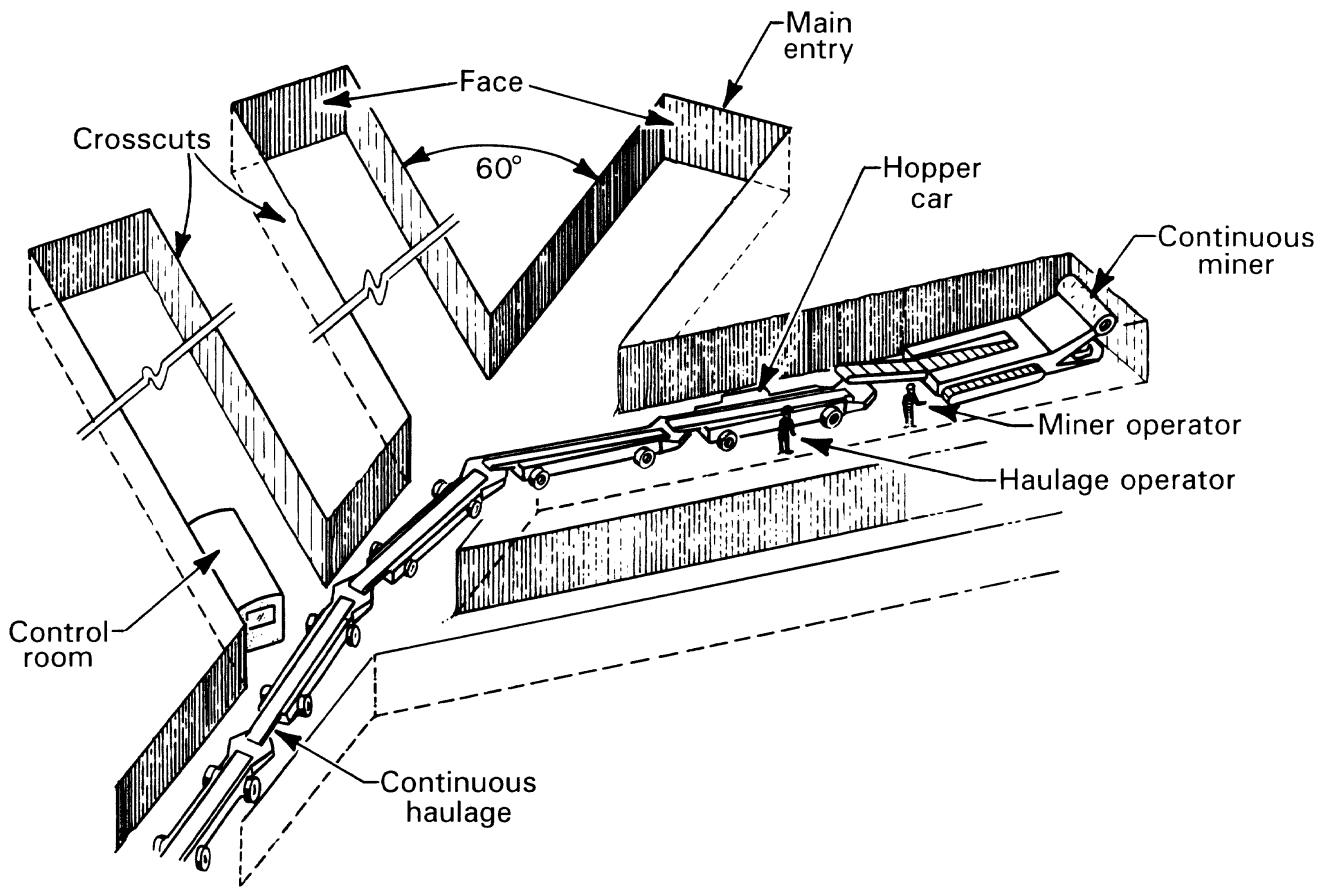

Figure 1.—Room-and-pillar mining chevron pattern.

PROPOSED OPERATING SCENARIO

The proposed operating scenario employs a hybrid approach combining manual and computer-assisted control. Initial machine alignment is done by manual line-of-sight control because much maneuvering is needed and this is the most effective approach. Remote pendants for the CHS and CM are used for this stage. Manual line-of-sight alignment also enables visual inspection of the machines before operation from a remote location, such as a control room. The exposures to hazards are fewer at this stage because the machine is not cutting coal; thus, dust and noise are minimal. The operator is still exposed to potential roof and rib falls during manual alignment; however, total exposure time has been reduced. The proposed scenario has electrical cables and water hoses tethered between the CM and CHS.

The second part of this hybrid control uses computer and sensor technology for proper positioning of the CHS and for assisting in control of the CM. A sensing system is needed to measure the *relative* x, y, and z position and yaw of the hopper car with respect to the CM. For reference, the coordinate system for mining is depicted in figure 2 where y is forward, x is at a right angle to y, and z is up. Yaw is the horizontal angle referenced to y.

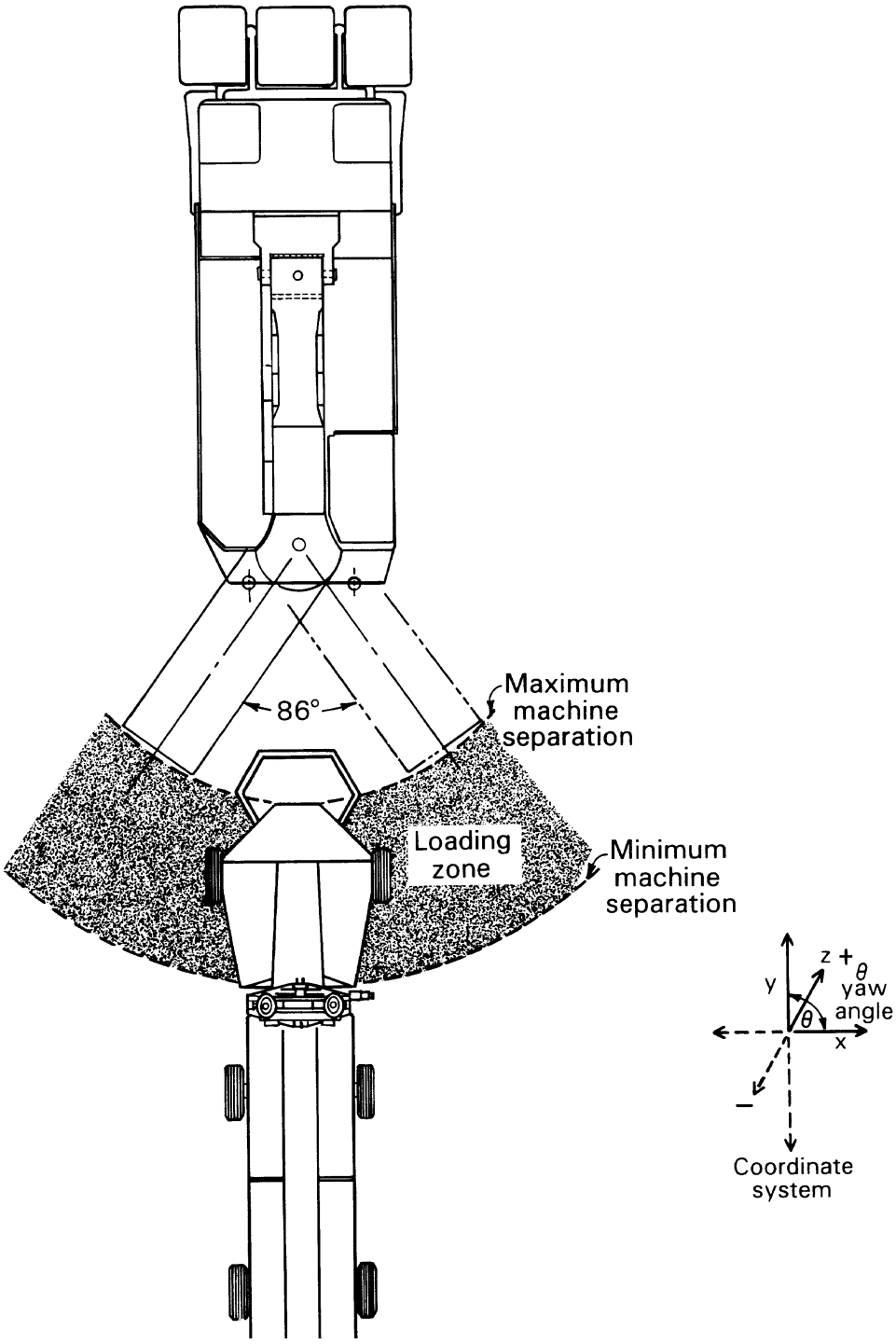

Figure 2.—Loading zone for the continuous mining and haulage machines.

REQUIREMENTS ANALYSIS

Foremost is the need to determine the machine's position and orientations, which presents a challenging problem because underground mining has a dynamic environment of potentially explosive atmospheres and changing physical configurations as new areas are mined. Changes in the physical layout may limit measurement ranges, and the presence of dust may degrade measurement accuracy. Sensors must not only provide accurate measurement data, but also operate safely and reliably in the mine.

ENVIRONMENTAL REQUIREMENTS

1. *Dust:* Airborne dust concentrations vary in relation to the particular mining task. Federal law, mandated by the Mine Safety and Health Administration, sets a maximum level of 2 mg/m^3 for human exposure.

2. *Moisture:* The sensor will be subjected to water from splashing or dripping from the roof. Relative humidity can exceed 95%.

3. *Explosive atmosphere:* Methane gas is often present in mines along with airborne coal dust. This mixture can present an explosive atmosphere depending on the fuel-to-air ratio and is ignitible by electrical and thermal energy. Therefore, the sensor must be of intrinsically safe design or made permissible.

OPERATIONAL REQUIREMENTS

Computer analysis of the movements of the CM and CHS and empirical machine characterizations established operating requirements and spatial constraints.

Each operational stage needs x, y, and yaw data. Additionally, z data are of use for special situations. For example, it is expected that the CM and CHS will be separated beyond the loading zone of figure 2 during the mining process. Z data become useful to detect when the conveyor height of the CM is below the top of the hopper car to avoid ramming the CM's conveyor into the hopper car when returning the machines to the loading zone. Uneven floors could cause this situation; under ideal conditions, the maximum adjustable vertical clearance between the hopper car and conveyor is only 22.9 cm.

The general operational needs are that (1) the relative positions of the machines are maintained within the loading zone during coal cutting and (2) the tethered cables between the machines are not overextended. Operation involves advancement, backout, and turning a crosscut.

1. *Advancement:* Figure 2 depicts the loading zone for the two vehicles. A 15.2-cm trajectory of coal from the end of the conveyor is used as a nominal value. Empirically, the conveyor full-scale swing is 86° and the maximum separation (y) between machines is 121.9 cm (given x, z, and yaw = 0), with the conveyor positioned fully up. A minimum separation of 18 cm provides a "cushion," thus preventing contact between the machines.

2. *Backout:* The most critical factor for backout is to ensure that the machine separation distance does not damage the tethered power cable. The maximum separation is 3.65 m. Exceeding this is possible because the machines move at different rates. The CHS travels at 19.5 m/min in reverse versus 16.2 m/min for the CM. When backing out of a 12.2-m section, three to four stops of the CHS are needed to avoid exceeding maximum separation.

3. *Turning a crosscut:* This is a very difficult operation to coordinate between the machines. Analysis of such a cut shows a maximum yaw of the CHS angle between the machines of 41°. Secondly, the maximum length of cable between the two machines is 3.65 m, thus giving a second constraint for turning the crosscut (see figure 3).

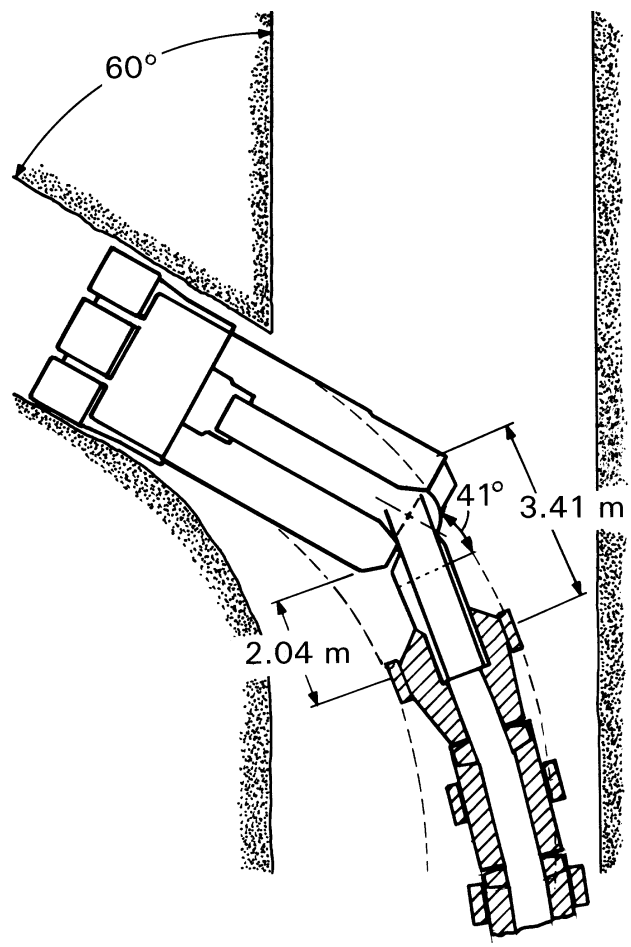

Figure 3.—Crosscut parameters.

POTENTIAL SYSTEMS

Everett [1995] and Borenstein et al. [1995] present overviews of various sensors for positioning mobile vehicles. These include gyroscopes, radio-frequency (RF) position location systems, and ultrasonic and optical systems. For example, an active laser-ring gyroscope-based system called the Modular Azimuth and Positioning System (MAPS) has been produced by Honeywell Military Avionics. Prior research [Sammarco 1993] investigated MAPS for mining applications. Additional development and refinement of the system [Schiffbauer 1996] shows this to be a viable method of determining machine position; however, the cost is prohibitive for this application.

Ground-based RF systems exist from Harris and Motorola as described by Everett [1995] and Borenstein et al. [1995]. Complete system cost ranges from $75,000 to $100,000; however, the resolution range (0.1 to 0.3 m) is unacceptable for mining applications. Obviously, satellite-based systems also will not work for underground mining applications.

Ultrasonic sensors, ubiquitous in industrial applications, were investigated by the Pittsburgh Research Laboratory (PRL) for navigation of underground mobile mine equipment [Strickland and King 1993]. Results were favorable for distance measurements to mine features such as ribs, corners, and intersections. The application for underground haulage guidance differs in the characteristics of the target, which is the back bumper of the CM. It is a smooth piece of metal, 29.2 cm high and 195.6 cm long. The bumper's bottom is 38.1 cm high from ground level. From crosscut analysis, two parameters—incidence angle and range—become very important in the selection of an ultrasonic transducer. The maximum incidence angle is 41°, as seen in figure 3; therefore, the beam angle of the transducer must exceed this value to receive the echo from the bumper. Let the beam angle be 45° and target distance equal 3.41 m. With these parameters, the spot diameter (D) of the ultrasonic beam is calculated as

$$D = 2R.\tan(0.5 \propto),$$

where R = target range

and $\propto$ = beam angle.

Spot diameter is calculated as 282.49 cm. One quickly realizes that the large spot diameter overshadows the 29.21-cm-high bumper, thus causing target recognition problems. The sensor could possibly read specular reflections from the mine walls, floor, and ceiling and from the conveyor of the CM.

A commercial device for docking consists of a vehicle-docking computer and a vehicle-docking head using ultrasonic transducers and infrared (IR) transponders. The ultrasonic beam angle of 15° is much less than the 41° needed during crosscuts. Therefore, this system is also unacceptable because an echo will not be returned to the sensor once the incidence angle exceeds 15°. Other position systems are noted in *Frequently Asked Questions* (FAQ) by Dowling [1996], which lists sensors for measuring three or six degrees of freedom; the systems include electromagnetics and scanning optical systems. Electromagnetic devices were found unacceptable when Sammarco [1990] documented the difficulties with these devices for a mining machine.

Anderson [1989] investigated a scanning laser system with passive targets for position measurement of a mining machine. Favorable accuracy results were obtained; however, there is concern about the physical robustness of the scanning mirror mechanism. The sensor, in the haulage application, would be mounted on either the haulage or the mining machine. Both machines encounter significant shock and vibration that may become problematic for a scanning sensor.

DynaSight, a near-IR sensor, was identified as a potential system. A review of the manufacturer's specifications and subsequent discussions led to in-depth examination.

CANDIDATE SYSTEM

DynaSight is a low-cost, commercial, electro-optic sensor designed to measure x, y, and z of passive or active target. Optionally, with an active target adapter (ATA) the sensor can track multiple active targets. The sensor uses eye-safe IR in the wavelength of 890 mm and has a nominal 75° conical field of view (FOV) with the origin at the fiduciary mark on the sensor's front panel. Optionally, the FOV can be factory set for 50°.

With passive retro reflective targets, IR light is emitted from two optical transceivers separated by a known distance at the front of the sensor's optical head, as shown in figure 4. X, y, and z data are measured with a single passive target and sensor. Yaw is *calculated* with two targets and sensors. The measurement range is proportional to the target size; a 75-mm targetenables measurements to 6 m. The orientation of a passive target is limited to about ±45° due to the target spectral response. With active targets, IR light is emitted from an active target and received by the sensor. The useful active target orientation is ±90°.

The sensor's orientation is ±35° (given a 70° FOV) about vertical axis through the sensor's fiduciary mark. Therefore, the sensor and targets can undergo a substantial range of orientation relative to each other, as seen in figure 5. This is important because during crosscuts, depicted in figure 3, the sensor and target will vary in orientation.

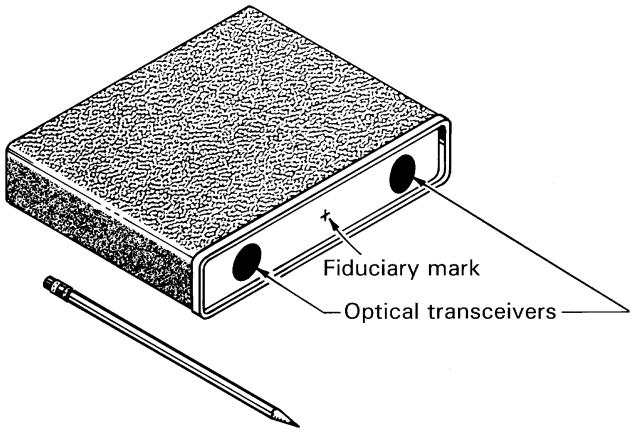

Figure 4.—The DynaSight sensor.

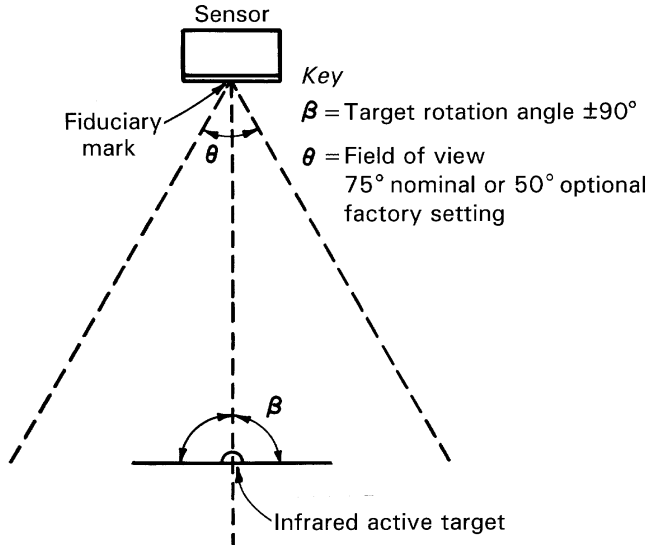

Figure 5.—Sensor and active target range of orientation.

With the ATA and at least two active targets, calculation of yaw is possible. More than two targets enable redundancy, but decreases target update rates. With four targets, the update rate is 16 Hz for each target, or a 4-Hz total update rate.

Because the mining machines move slowly, this update rate is acceptable. The maximum CM machine forward speed was measured at 17.5 m/min when moving in free space on a concrete floor. Thus, the maximum machine movement between updates is less than 7.6 cm for the CM and 8.3 cm for the CHS. Because the minimum separation between both machines is set to 18 cm, the CHS would receive at least one position update within this 18-cm "cushion."

1. *Sensor diagnostics:* Diagnostic data, for passive or active targets, are given in two forms. First is a visual indication using a single light-emitting diode (LED); second is a digital status word embedded within the sensor's RS-232C output.

Diagnostics are given for four conditions: search, coast, caution, and track. During the search mode, the LED is red. During the coast mode, the sensor has locked on (found) a target, but has lost it and is attempting to reacquire it. During coast, the LED is red. During the caution mode, conditions are marginal and target loss is imminent. This caution status can be extremely helpful for the mining application. If target loss is imminent, the controller of the mining machine can take alternative action or invoke an orderly stop. During caution, the LED alternates between red and green. During the track mode, the signal-to-noise ratio of sensor data is acceptable and target loss is not imminent. For this mode, the LED is green.

2. *Redundancy:* An effective means to reduce consequences of component failure or erroneous data is to use redundancy. Multiple active targets are used because they are most likely to be damaged when mounted to the rear bumper of the CHS. Four active targets are used. This enables detection of erroneous target data by comparison voting schemes. Total failure of an active target can be addressed by switching out the failed target. With four active targets, the position update rate is 4 Hz, which was shown earlier to be acceptable.

TESTING

Testing of the DynaSight sensor was conducted in the controlled environments of a laboratory and in a dust gallery at PRL. Two types of tests were conducted: static and dynamic. Static tests investigated the feasibility of the technology for mining applications and focused on accuracy and adaptability for mining. Dynamic tests subjected the system to actual operating conditions where machine translations, rotations, vibration, and random obstructions occur. In both cases, the sensor was interfaced to a personal computer (PC) for control and data acquisition.

STATIC TESTS

Laboratory tests were designed to address the following questions: Should passive or active targets be used, and what were the associated accuracies? Next, assuming the sensor's accuracy was sufficient, could the sensor be approvable for operation in a mine environment of dust and methane? The sensor could be approvable if mounted in an explosion-proof enclosure fitted with an optical window. However, would the optical window impede proper sensor operation and degrade

accuracy? Lastly, what would be the effect of airborne dust on accuracy and system robustness?

1. *Passive target tests:* The basic equipment setup consisted of the sensor connected to a PC via RS-232C. The PC ran software written in the "C" programming language to acquire sensor data and display the output in real time.

Testing used 22- and 75-mm target sizes at distances of 0.31, 2.44, and 3.65 m. Measurements were taken with targets perpendicular (a target angle of 0°) to the sensor's optical head. Next, the target was rotated to 45° and the tests were repeated. This is of interest because the requirements analysis showed the targets could be at a 41° incidence angle during crosscuts.

Next, testing was repeated using an optical window needed for the explosion-proof enclosure. The window was a 1.26-cm-thick, fire-polished, borosilicate glass with ground and chamfered edges. Our intent was to determine accuracy and range degradation due to the window.

Finally, tests were conducted involving false target rejection and target obstructions. Multiple sources of false targets exist in this mining application; however, two were of prime concern —incandescent lighting and retro reflective tape, both of which are present on miners' caps and mining machines.

Target obstructions could occur as roof material falls or if coal is improperly discharged from the conveyor into the haulage equipment. Of interest was whether and how quickly the sensor locks on (finds) the actual target rather than the false targets. Debris could fall within the sensor's FOV, causing a target obstruction.

2. *Active target tests:* Testing of the active targets followed the same format as that for passive targets. The main changes involved the measurement ranges. The minimum distance was changed from 0.3 to 0.6 m because the sensor did not provide reliable measurements for distances less than 0.6 m. The maximum distance was increased to 4.4 m to accommodate a distance of 1.2 m from the sensor's mounting location to the front bumper of the haulage machine. In other words, at a machine separation of 3.7 m, the target reference point is 4.9 m from the sensor's fiduciary mark (assuming x, z, and yaw = 0).

The first group of tests used a single active target. The next group used the ATA with four active targets arranged in a linear array. Spacing was 30.5 cm between each target; thus, the distance from target 1 to 4 was 91.4 cm. Target measurements were referenced to the center of the array located 45.7 cm from the outermost targets.

3. *Dust tests:* Laboratory tests for a single active target were repeated within a dust gallery. The sensor was mounted within a dust-tight enclosure fitted with the borosilicate lens. A dust mixture was introduced into the gallery at concentrations ranging from 0 to 15 mg/m^3, the maximum obtainable by the test apparatus. For each level of dust, the targets were oriented at 0°, 20°, and 40° relative to the sensor. These orientations were set for each target distance of 0.6 m, 2.5 m, 3.6 m, and 4.9 m.

DYNAMIC TESTS

These tests emulate a typical in-mine operation where the sensor must track a CM as it moves, cuts coal, and loads coal into the CHS. The primary objectives of the tests concern (1) target loss and (2) accuracy. Target loss can occur from obstructions or vibration. Obstructions primarily consist of debris falling from the conveyor and into the sensor's FOV. Vibration can be severe during the sump and shear cycles of cutting coal, thus preventing the sensor from locking onto a target. With regard to accuracy, we are primarily interested in x, y position. It is anticipated that position accuracy could be affected by machine vibration, dust during the cutting process, or debris falling from the conveyor.

The basic test scenario aligns the CHS behind the CM. Next, the CM is advanced approximately 1.5 m while sumping and shearing during its normal operations. It is during this opera-tion that the data are collected for dynamic testing.

1. *Test setup:* The tests were conducted at PRL. Figure 6 depicts the overall setup. During dynamic tests, the CM cuts a block of "coalcrete," which is simulated coal consisting of coal, fly ash, and cement. The sensor was mounted on the front end of the CHS. Connected to it was a single-board computer that acquired and processed data. The data were logged for analysis purposes at a rate of approximately 1.2 Hz. Next, on the back bumper of the CM, four active IR targets were mounted colinearly for the sensor to track. Vibration measurements were made by accelerometers shown in figure 6. To measure vibration of the sensor, an accelerometer was mounted onto the sensor mounting plate. To measure vibration of the active targets, an accelerometer was mounted on the target bracket. To establish a baseline reference for the position of the CM and CHS, an electronic automated tracking transit (ATT) was employed. The system used a prism mounted on the CM and a prism mounted on the CHS. The ATT automatically tracks the prism as a machine moves. ATT data are expressed as northing and easting, which can be translated into along-track and cross-track data. Also located on the CM was the Honeywell Ore Recovery and Tunneling Aid (HORTA) [Schiffbauer 1996], which provides navigation information, such as northing, easting, yaw, and altitude. The ATT accuracy is ±10 mm ±5 ppm for distance and ±1 second of arc. All of the data collected was time-stamped, including data from the HORTA, ATT, DynaSight, and accelerometers.

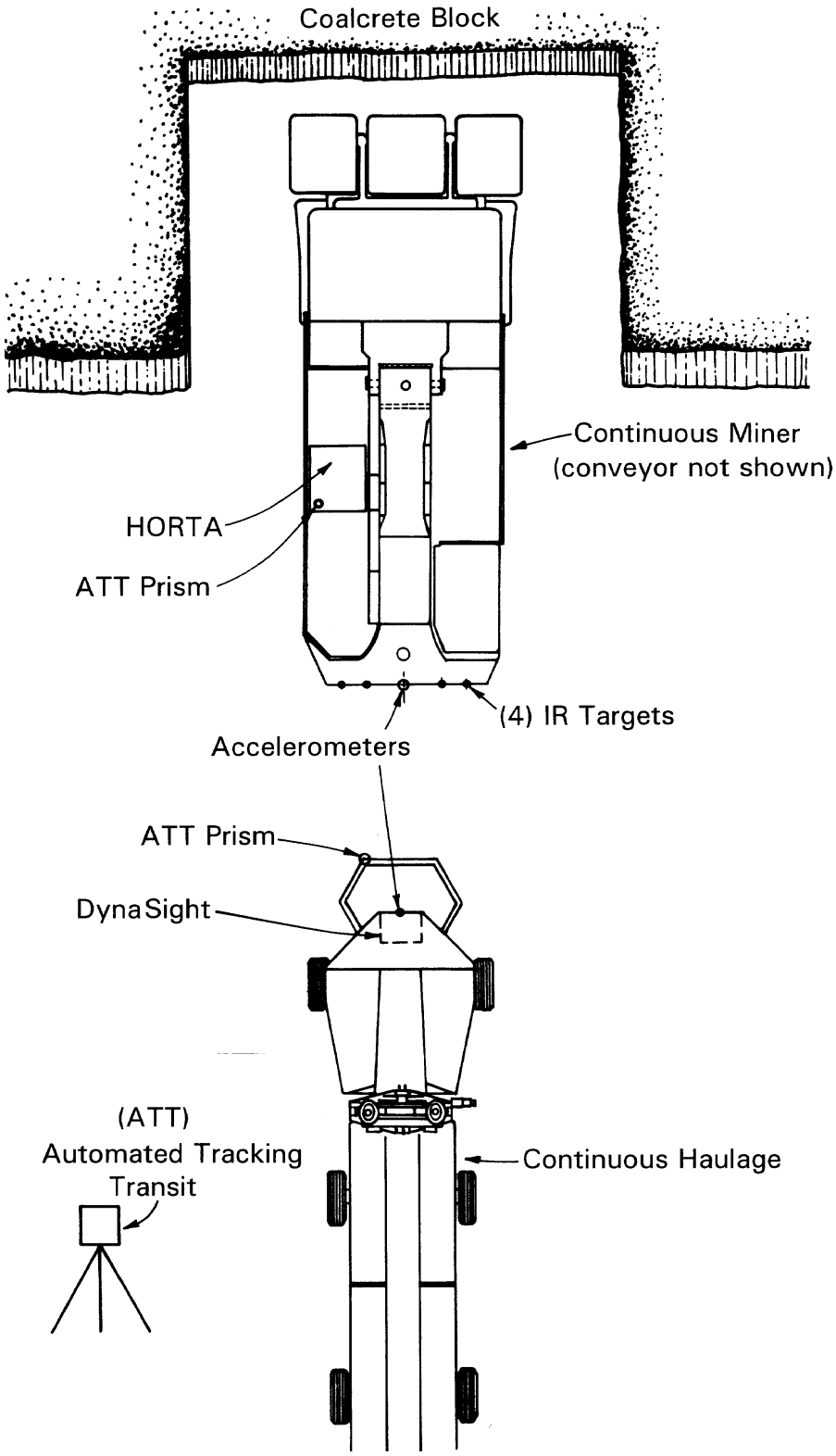

Figure 6.—Dynamic testing setup.

RESULTS

STATIC TEST RESULTS

1. *Passive targets:* The test results are for a 22-mm target. Of interest was the sensor's accuracy at varying distances when the target angle was 0° and 45°. These conditions were repeated with and without the optical window.

In general, errors increased as distance increased. The worst-case error was 10 cm at a distance of 3.6 m where the target was at 0° and without the optical window. It was expected that errors would increase as the target was rotated or when the optical window was used. In some cases, such as at Y = 0.6 m, this was true. Overall, no generalized pattern for errors, dependent on the window or target rotation, was evident through the range of measurements.

At this point, attention focused on false target recognition. False target sources, such as a miner's cap lamp, were introduced into the sensor's FOV while the sensor was locked on the actual passive target. At distances of 0.6 m, 2.5 m, and 3.6 m, the sensor did not detect the cap lamp. Even if an obstacle obstructed the target, the sensor would, within 0.3 s, lock back onto the passive target, not the cap lamp. Tests with reflective tape on a miner's cap showed that when the target was obstructed, the sensor would lock onto the false target of reflective tape. Thus, the passive target was deemed unacceptable.

2. *Single active target results:* Our test results show that target rotation has a minor effect on the accuracies. Again, error was directly related to y. Given the repeatability of the errors, a single second-order polynomial was generated for error correction of y data for target rotations of 0°, 20°, and 45°. The equation is

$$\text{Compensation factor} = .0003Y^2 - .9933Y + .7796,$$

where the goodness of fit measure $R^2 = .996$.

Applying this compensation reduced errors significantly. At 3.6 m, the maximum separation between the machines during advance, the worst-case error decreased from 4.3% to 0.6%, as seen in figure 7.

3. *Dust tests:* Dust test results (figure 8) showed a maximum error increase of less than an additional 0.8% with respect to readings at 0 mg/m^3 of dust. Note that 15 mg/m^3 was the maximum attained by the test gallery. Dust at the rear bumper of a CM ranges from 5 to 15 mg/m^3. Dust test results showed very good accuracy at all dust levels; therefore, airborne dust is not expected to be problematic. An ac-cumulation of dust on the sensor's lens was noted at the end of the testing. Long-term field testing is needed to determine the sensor's operation as dust accumulates on the lens.

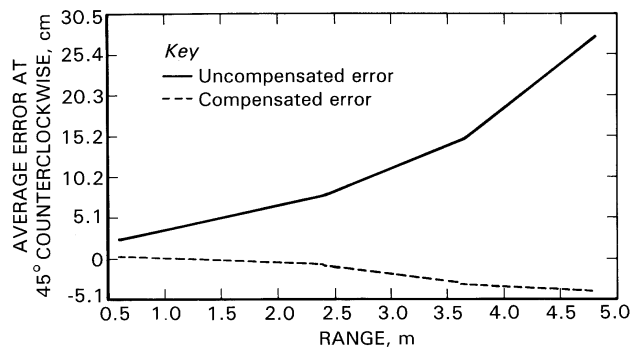

Figure 7.—Raw and corrected data for a single active target oriented at 45° and without the optical window.

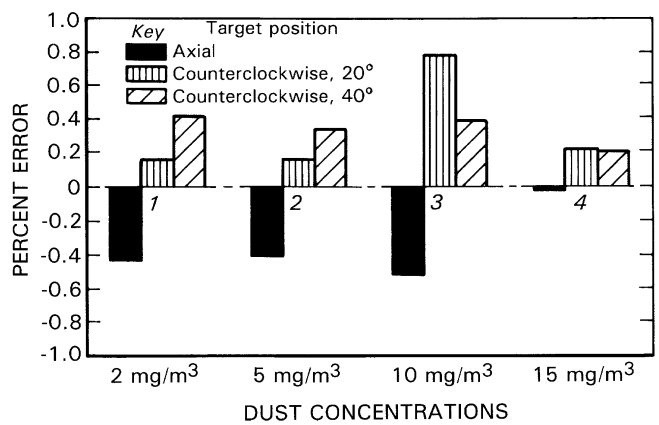

Figure 8.—Testing in airborne dust showed less than 0.8% accuracy (worst case) degradation compared with accuracies at 0 mg/m^3 for a single active target. (Percent error is relative to 0 mg/m^3 readings.)

4. *Multitarget tests:* Next, laboratory tests were conducted using the ATA and four targets. For the tests, x and z were fixed at 0.5 cm and 1.2 cm, respectively; y and target yaw were varied. The data are presented in table 1. Worst cases and best cases are identified.

Significant accuracy improvements are evident in comparisons of the single-target error of figure 7 and the multitarget error data of table 1. For comparison, corrected y errors at 3.65 cm (expressed as a percentage of reading) were nominally 0.6% for single-target data; multitarget uncorrected error was 0.2 cm, or 0.4%. Yaw error was nominally 0.67° for the multitarget data.

DYNAMIC TEST RESULTS

Target Loss Tests

If the targets are continually lost by the sensor, accuracy of the system becomes irrelevant. Data from at least two targets

are needed to calculate yaw. Four targets were used to provide redundancy. Target loss is most likely to occur during sump and shear operations, when vibration and target obstructions are most prevalent. Videotape recordings during tests confirmed this by showing significant amounts of debris falling within the FOV of the sensor as coal was loaded into the hopper. Analysis of test data showed that *total target* loss never occurred. There were times, however, where one or two of the four targets were lost, as seen in figure 9; therefore, position and yaw data were always available. During the test, target loss was infrequent and occurred for less than 1.2 s. One factor contributing to target loss is vibration. During this same test period, vibration levels of the sensor were less than 0.5 g of vibration. The targets located on the back of the CM, on the other hand, typically measured from 2.5 to 3 g of vibration during the cutting cycle. In examining the test results, it seems that vibration is not a significant contributor to target loss. Inspection of videotapes of the area between the CHS and CM showed that target loss was most probably due to large pieces of debris blocking the target area, as can be seen in the videotape. In summary, total target loss did not occur, and loss of one or two of the targets occurred infrequently. Therefore, the DynaSight is able to track during the sump and shear cycles of the CM.

Table 1.—Error data using the multitarget adapter

Y actual, m	Y error, cm	Yaw actual, °	Yaw error, °	X error, cm	Z error, cm
1.22	[1]-10.0	0	-1.7	-2.8	0.3
1.22	-5.8	20	[1]6.9	[1]4.8	-0.7
1.22	NAp	45	NAp	NAp	NAp
2.44	0.5	0	-1.6	0.08	[2]0.0
2.44	0.4	20	4.8	-2.7	0.1
2.44	3.7	45	[2]-1.2	-4.6	0.1
3.65	2.4	0	-1.6	-1.3	[1]0.8
3.65	[2]0.2	20	4.8	-3.7	0.8
3.65	2.0	45	-1.2	3.8	0.8
4.87	-1.2	0	-1.7	[2]0.0	0.8
4.87	1.0	20	-1.9	-2.6	0.8
4.87	1.6	45	-3.5	-4.2	0.8

NAp Not applicable.
[1]Worst case.
[2]Best case.

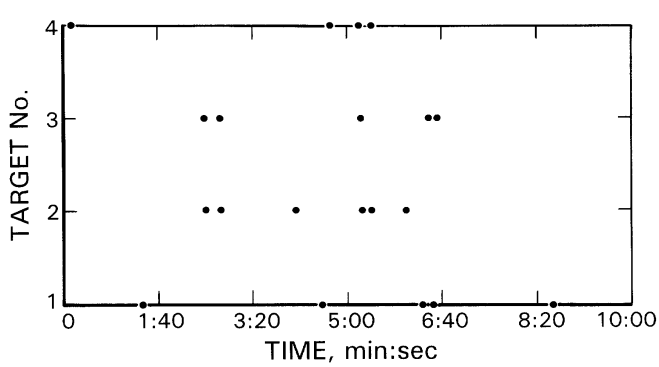

Figure 9.—Target loss for sump and shear. (Note: Total target loss did not occur.)

Accuracy Analysis

The ATT served as the baseline reference, as stated earlier, and provided x, y position in terms of northing and easting. The ATT thus provides "absolute" measurements of position. The DynaSight, on the other hand, provides measurements of position "relative" to the fiduciary mark on the front of the sensor. To compare data, the ATT readings were converted to measurements of cross-track and along-track relative to a starting position of the mining machine. We can correlate the sensor and the ATT such that the cross-track and the along-track both begin at zero for the initial position of the mining machine, thus enabling direct comparisons of data. To convert the northing and easting readings of the ATT, it is necessary to obtain the mining machine's yaw from HORTA, mounted on the CM. Therefore, cross-track and along-track were calculated using these equations:

$$\text{cross-}track = (\Delta\, easting)\cos(\Delta\, yaw) - (\Delta\, northing)\sin(\Delta\, yaw)$$

$$\text{along-}track = (\Delta\, northing)\cos(\Delta\, yaw) - (\Delta\, easting)\sin(\Delta\, yaw)$$

As Δ yaw approaches zero, cross-track approaches the value of Δ easting and along-track approaches Δ northing values. The maximum Δ yaw measured by HORTA was about 0.15° when cutting coalcrete.

Figure 10 compares DynaSight and ATT along-track. The x axis has 14 data points taken during the sump and shear cycles. During this activity, dust, falling debris (target obstructions), and machine vibration are at a maximum. As one can see from the data, the along-track measurements for the ATT and the DynaSight sensor correlate extremely well. The maximum deviation was 3.35 cm at data point 14, which occurred during a 1.3-m separation between the targets and sensor. The mean error for the DynaSight was 1.68 cm.

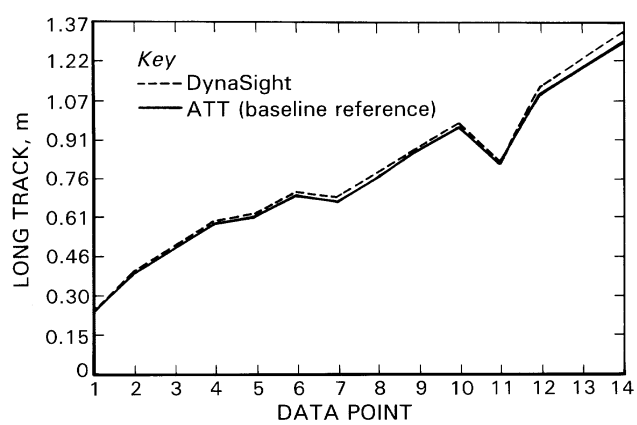

Figure 10.—Along-track comparison.

Evaluation of cross-track error became problematic due to apparent corruption of ATT data. According to the ATT, the cross-track changed about 2.4 cm from the beginning of the cut to the end. This was in stark contrast to DynaSight data of about 12.2 cm. Therefore, cross-track was measured by physically profiling the actual cut in the coalcrete block. A conventional transit was used and resulted in a cross-track measurement of 6.1 cm. This compared with a cross-track of 7.1 cm from the DynaSight *when accounting for cross-track translation due to changes in yaw.* This translation is required because the ATT target was at a different location on the machine than that of the DynaSight's targets. Thus, cross-track translations differ when machine yaw changes.

OTHER MINING APPLICATIONS

The DynaSight sensor can be used for other mining applications in addition to guidance between the CHS and CM. Two such applications concern the control of sump distance for a CM. The second application uses the sensor for navigation of a CM in room-and-pillar or possibly highwall applications in a push-pull technique of guidance described later.

Control of sump distance or sump depth can be quite important when the CM is using a CHS. It is important that the belt of the haulage is not overloaded by surges of coal or by overcapacity. This happens when the sump distance becomes excessive. Obviously, the deeper sumps mean more coal will be cut and loaded onto the belt. Overloading the belt can significantly decrease the belt life of the continuous haulage. When controlling the depth of the sump, two areas are of prime concern: the accuracy of the sensor and robustness during the sump conditions.

To determine the sensor's performance in this area, we used the coalcrete test previously described for dynamic testing of the sensor. From coalcrete tests, it is possible to determine sump distance accuracy by comparing the output of the sensor during the sump conditions to the measurements made by the ATT. The sump accuracy is shown in figure 11, which compares sump distance measurement between the DynaSight and the ATT for eight sump data points. Overall, the sensor measures the sump distance very well given the maximum error of 1.2 cm. The sensor consistently measured somewhat less than the ATT, as seen in data points 1, 2, 4, and 8. Measurements during sump are the most demanding for the sensor due to vibration and shock, as well as high dust levels and the fall of debris between the two machines during these stages. Therefore, robustness of the sensor was investigated during those conditions by examining target loss data. By inspecting the target data during the dynamic testing in coalcrete, it can be seen that the sensor never lost sight of all of the targets; therefore, the sensor is well suited to measuring sump distance because of its good accuracy and robustness.

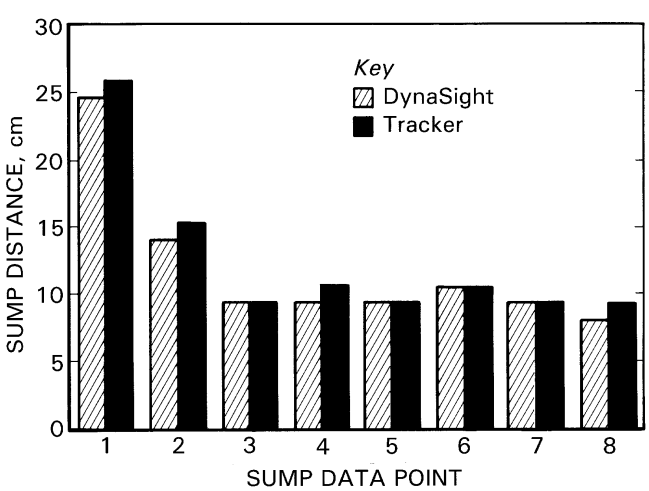

Figure 11.—Sump distance accuracy.

The second application uses the sensor for navigating the CM in room-and-pillar and highwall applications. To use the sensor, one would need continuous haulage or some other structure behind the mining machine such that both have independent movement. In this configuration, navigation of the CM and control of the guidance between the two machines would be done in a push-pull technique. The basic technique is as follows: Both machines start at known positions and orientations at the beginning of a cut. As the CM advances, the DynaSight sensor mounted on the CHS tracks and measures the position of the CM. These data are then used for controlling the position and orientation of the CM. Once maximum separation between the CHS and CM is reached, the haulage is advanced by guiding the CHS in reference to the stationary CM. Once it reaches the back end of the CM, the process is repeated. Errors in this situation would be cumulative. Absolute position with errors relative to the starting point could be determined by keeping track of each push-pull cycle. Therefore, by knowing the original position and keeping track of relative measurements between each push-pull cycle, it is then possible to determine, at any given time, the absolute position of either machine relative to the starting position.

There are numerous advantages to using the sensor in this manner. First, the sensor can perform multiple functions. As shown in this report, it can be used to guide the continuous haulage, to control the sump distance, and to navigate the CMs, as described in this section. This could represent a very efficient and cost effective way of achieving guidance for all of these functions. To determine accuracy of the system for guiding the CM, more analysis of test data is needed. This could be achieved through computer simulations of the push-pull technique, or it could be determined empirically. The analysis should include the accuracy of yaw in order to control the machine's orientation because x, y position alone does not

provide a complete picture of the location of the machine. For example, yaw information is quite important during a highwall application where rib thickness must be maintained. The x position may change very little, but if the orientation of the machine has changed significantly, the danger in cutting through the rib to the next entry is quite real, possibly resulting in a cave-in or roof fall. Therefore, an unsafe condition would result for workers in retrieving the machines.

FUTURE WORK

The DynaSight sensor holds much potential for applications in mining, as evidenced from the testing and analysis described earlier in this report. Long-term field testing in actual mining conditions is needed. Of interest are sensor operation during extended cutting periods when machine vibration is maximum and how well the sensor operates as dust accumulates on the optical lens and active targets. Also, repackaging the sensor's optical head as a separate subsystem to provide more mounting flexibility is desirable. This enables increased spacing between the optical head transceiver; thus, accuracy would improve. Eliminating the active target tether would also simplify installation of the system. Although our research program to develop the enabling technology for REMS concluded in September 1997, it is hoped that an equipment vendor or mining company will complete the work described above.

CONCLUSIONS

The use of the DynaSight sensor for integrating the extraction and haulage process could reduce the potential of miners being struck or caught by moving machinery. This requires a system to determine the haulage machine's x, y position and yaw. The DynaSight sensor, with multiple active targets, is the best candidate based on accuracy, performance in airborne dust, false target rejection, and robustness. The multitarget option for the sensor is the most desirable because of target redundancy, improved accuracy, and reduced hardware. Dynamic testing subjected the sensor to machine translations, rotations, vibration, and random obstructions. Accuracy degradation and total target loss were not encountered. Thus, at this stage, the system has demonstrated sufficient robustness and accuracy to warrant long-term field investigations.

ACKNOWLEDGMENT

The author acknowledges John S. Gbruoski (retired) of the former U.S. Bureau of Mines and Jon A. Hummer and Raymond W. Vereneck of SSI Services, Inc., Pittsburgh, PA, for their contributions in the areas of testing, data collection, analysis, and general assistance.

REFERENCES

Anderson DL [1989]. Position and heading determination of a continuous mining machine using an angular position-sensing system. Pittsburgh, PA: U.S. Department of the Interior, Bureau of Mines, IC 9222.

Borenstein J, Everett HR, and Feng L [1995]. Where am I? Sensors and methods for autonomous mobile robot positioning. Wellesley, MA: A. K. Peters, Ltd.

Dowling K [1996]. Robotics frequently asked questions list. World Wide Web [URL=http://www.frc.ri.cmu.edu/robotics-faq].

Drotning WD [1992]. Automated waste canister docking and emplacement using a sensor-based intelligent controller. Albuquerque, NM: Sandia National Laboratories, Report No. SAND91-0558.

Everett HR [1995]. Sensors for mobile robots: theory and application. A. K. Peters, Ltd.

Gage D, Pletter JB [1987]. Ground vehicle convoying. International Society for Optical Engineering (SPIE), Vol. 852, Mobile Robots II, pp. 319-328.

McClelland JJ, Randolph RF, Schnakenberg GH Jr., Fowkes RS [1994]. Safety breakthrough: reduced exposure mining system (REMS). Pittsburgh, PA: U.S. Department of the Interior, Bureau of Mines, SP 26-94.

NIOSH [1993]. Fatal injuries to workers in the United States, 1980-1989: a decade of surveillance. Cincinnati, OH: U.S. Department of Health and Human Services, Public Health Service, Centers for Disease Control and Prevention, National Institute for Occupational Safety and Health, DHHS (NIOSH) Publication No. 93-108S.

Sammarco JJ [1993]. Field evaluation of the modular azimuth and positioning system (MAPS) for a continuous mining machine. Pittsburgh, PA: U.S. Department of the Interior, Bureau of Mines, IC 9354.

Sammarco JJ [1990]. Mining machine orientation control based on inertial, gravitational, and magnetic sensors. Pittsburgh, PA: U.S. Department of the Interior, Bureau of Mines, RI 9326.

Schiffbauer WH [1996]. Navigation and control of continuous mining systems for coal mining. In: Proceedings of the Institute of Electrical and Electronics Engineers, Industry Applications Society 31st Annual Meeting. Vol. 4, pp. 2473-2479.

Strickland WH, King RH [1993]. Characteristics of ultrasonic ranging sensors in an underground environment. Pittsburgh, PA: U.S. Department of the Interior, Bureau of Mines, RI 9452.

APPENDIX A.—DYNASIGHT TECHNICAL SPECIFICATIONS

Following are the DynaSight technical specifications, as supplied by the manufacturer.

Size: 8.6 by 14.5 by 3.9 cm (7.3 by 5.7 by 1.5 in)

Operating wave band: Near-IR

Field of view: 50 ft azimuth by 50 ft elevation

Measurement update rate: 64 Hz maximum for passive targets, 200 Hz maximum for active targets

Lock-on delay: 0.3 s typical

Target operating range: 0.1 to 1.5 m for 7-mm passive targets, 0.3 to 4 m for 25-mm passive targets, 1 to 6 m for 75-mm passive targets

Active target operating range: 0.1 to 18 m for active targets

Measurement resolution: 0.1 mm cross range typical,[1] 0.4 mm down range typical[1]

Absolute accuracy: 1 mm cross range typical,[1] 4 mm down range typical[1]

Power requirements: 14 V ac @ .6 A (wall transformer for 115 V ac supplied)

Electrical interface: Dual RS-232C with DB-9 connectors (cable and DB-25 adapters are supplied)

Default data format: 8 bytes per measurement/target update

X, Y, Z in 16-bit two's complement format 0.05 mm per least significant bit

Manufacturer: Origin Instruments Corp., 2121 Windchime Dr., Grand Prairie, TX 75051-4117, phone: (214) 264-7212

Three-dimensional measurements are reported in a Cartesian coordinate system with origin at a fiducial mark on the DynaSight sensor.

[1] RMS values for 7-mm target at 80-cm range under normal fluorescent room lights. Values will vary with operating range and target diameter and, to some extent, with ambient illumination and target position in the field of regard. Measurement resolutions of 0.05 mm in three axes are achieved at 40-cm range, and resolution is significantly reduced at range extremes.

APPENDIX B.—MACHINE CHARACTERIZATIONS

Of primary importance in machine data are the tramming rates of the CHS and CM. Forward and reverse tram rates were determined empirically for the JOY 3FCT and 14CM. Three tests were done for each direction. The first forward test was measured from a standing start. The remaining tests were measured once the machine was moving; therefore, start/stop latencies are not included.

3FCT

Direction	Calculated m/min, avg
Forward	19.9
Reverse	19.5

14CM

Direction	Calculated m/min, avg
Forward	17.5
Reverse	16.3

APPENDIX C.—SERIAL COMMUNICATIONS DETAILS

Figure C-1 shows the basic communications block diagram for interfacing between the CM, CHS, and the REMS control system.

Data Format

Two's complement binary data
8 bits/character
No parity
1 stop bit
19,200 baud

Electrical Connection

RS-485 - half duplex
Twisted pair

Control Commands

A control command is sent to the sensor to query for data or to restart the sensor. The command begins with an "attention" (03h), followed by the control command data.

Data query . .	Query sensor for x, y, z, yaw, and sensor status.	03h, 11h
Cold boot . . .	Cold boot (restart) sensor . .	03h, 52h
Reserved . . .	Reserved	03h, 24h

Output Data

Output data are sent from the sensor upon the request of a data query command. The output is in the form of a 16-bit data board in two's complement. (Note: X, Y, Z data are measured; yaw and pitch are calculated.)

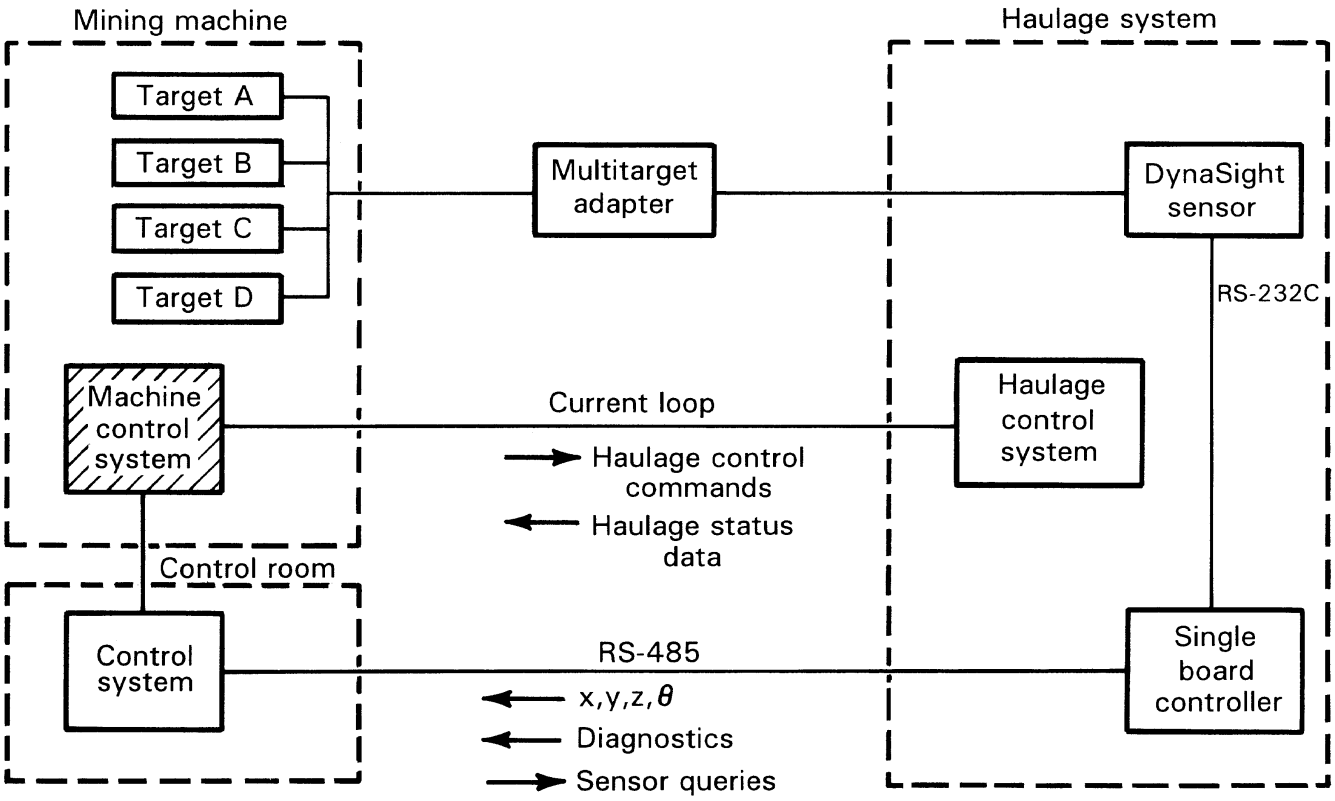

Figure C-1.—Communications block diagram.

Data Word Format

The output data also contain sensor diagnostic information, as detailed under “Sensor Status Data (Diagnostics)" below.

Word No.	*Output data*	*High byte*	*Low byte*
Word 0 . . .	Miscellaneous	10000ttss	10000rrrr
Word 1 . . .	X position (cm) . . .	xxxxxxxx	xxxxxxxx
Word 2 . . .	Y position (cm) . . .	yyyyyyyy	yyyyyyyy
Word 3 . . .	Z position (cm) . . .	zzzzzzzz	zzzzzzzz
Word 4 . . .	Yaw (radians)	hhhhhhhh	hhhhhhhh
Word 5 . . .	Pitch (radians)	pppppppp	pppppppp

Word 0

"tt": Targets in the "track" mode

tt	*Targets*
00 . . .	0 or 1*
01 . . .	2
10 . . .	3
11 . . .	4

*At least two targets are needed in the track mode in order to obtain yaw data.

“ss": Sensor Status Data (Diagnostics)

ss	*Description*
00 . . .	SEARCH: Search for target. Searching for 3 or 4 targets.
01 . . .	COAST: Lost target, attempting to reacquire. Reacquiring 3 or 4 targets.
10 . . .	CAUTION: Marginal conditions, loss is imminent for 3 or 4 targets.
11 . . .	TRACK: Proper tracking. At least two targets are in the track mode.

When status field is "SEARCH" or "COAST", the last data values during "TRACK" or "CAUTION" are given.

"rrrr" Reserved. Default value is 0000.

Sensor Coordinate System

The coordinate system is shown in figure C-2.

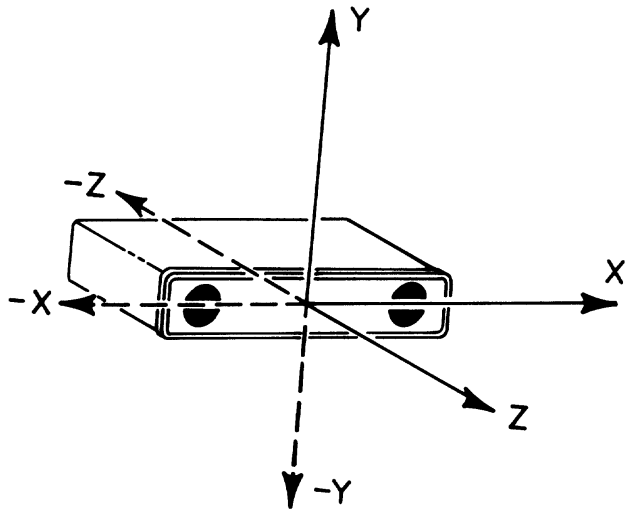

Figure C-2.—Sensor’s coordinate system.

Target Measurement Reference

Yaw and position data are referenced to the midpoint between targets 0 and 3 as mounted on the rear bumper of the mining machine. The coordinates of this reference point will be determined once the targets are mounted to the bumper.

Sensor Update Rate

Lock-on time = 0.3 s × (n targets)
Total update rate = 32 Hz ÷ (n targets)

For two targets (minimum configuration):
Lock-on time = 0.3 s
Total update rate = 16 Hz

For four targets (maximum configuration):
Lock-on time = 1.2 s
Total update rate = 4 Hz

NIOSH

Delivering on the Nation's promise:
Safety and health at work for all people
through research and prevention.

To receive other information about occupational safety and health problems, call
1-800-35-NIOSH (1-800-356-4674), or
visit the NIOSH Home Page on the World Wide Web at
http://www.cdc.gov/niosh

DHHS (NIOSH) Publication No. 98-161

November 1998

+ ⬀

+ +

+ *

To receive other information about occupational safety and health problems, call
1-800-35-NIOSH (1-800-356-4674), or
visit the NIOSH Home Page on the World Wide Web at
http://www.cdc.gov/niosh