S3 Figure

A

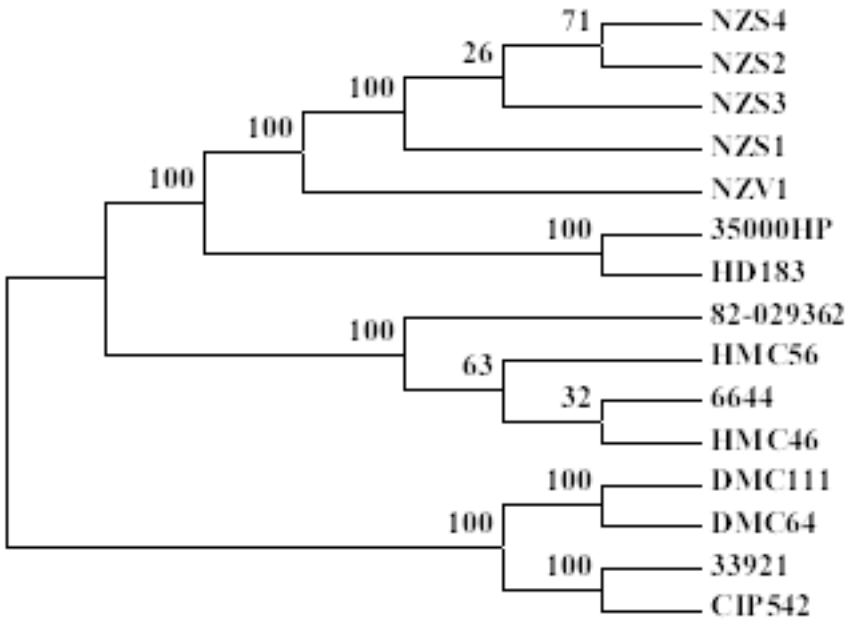
71
26
100
100
100
100
100
63
32
100
100
100
NZS4
NZS2
NZS3
NZS1
NZV1
35000HP
HD183
82-029362
HMC56
6644
HMC46
DMC111
DMC64
33921
CIP542

B

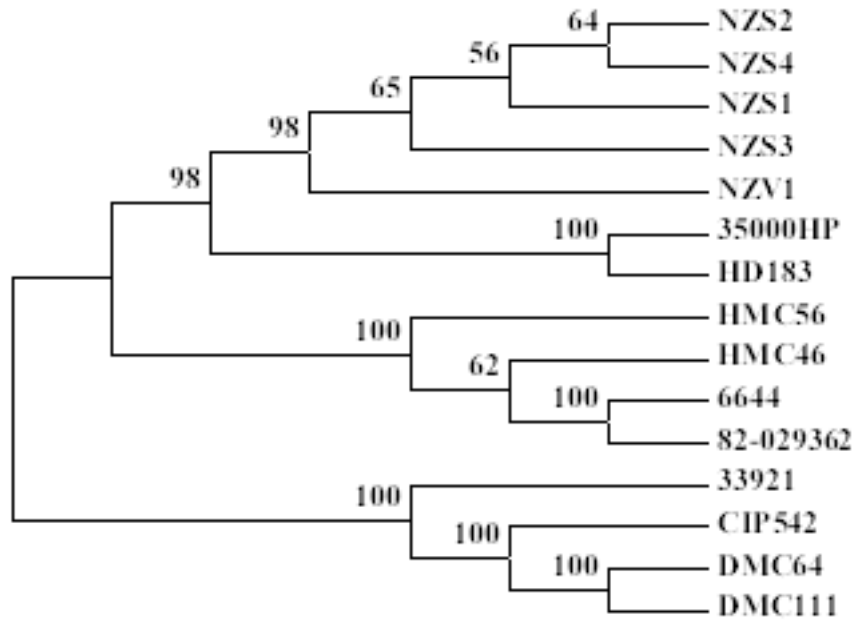
64
56
65
98
98
100
100
62
100
100
100
100
NZS2
NZS4
NZS1
NZS3
NZV1
35000HP
HD183
HMC56
HMC46
6644
82-029362
33921
CIP542
DMC64
DMC111