Industrial Health 2014, **52**, 381–392

Review Article

Fall Prevention Research and Practice: A Total Worker Safety Approach

Hongwei HSIAO[1]

[1]National Institute for Occupational Safety and Health, USA

Received May 14, 2014 and accepted August 23, 2014
Published online in J-STAGE August 23, 2014

Abstract: Slips, trips, and falls (STF) represent a serious hazard to workers and occupants in many industries, homes, and communities. Often, the cause of a STF incident is multifactorial, encompassing human, environmental, and task risk factors. A STF-related disability can greatly diminish the occupational capability and quality of life of individuals in both the workplace and the home. Countering STF hazards and risks both on and off the job and on all aspects of control measures is a "total worker safety" matter, a challenging yet tangible undertaking. As the federal organization responsible for conducting research for the prevention of work-related injuries in the United States, the National Institute for Occupational Safety and Health (NIOSH) has been conducting research on STF controls for some decades. Many NIOSH research outcomes have been utilized for STF prevention in workplaces, with potential for prevention in homes as well. This paper summarizes the concept of total worker safety for STF control, NIOSH priority research goals, major activities, and accomplishments, and some emerging issues on STF. The strategic planning process for the NIOSH research goals and some identified research focuses are applicable to the development and implementation of global STF research goals.

Key words: Falls, Construction, Healthcare, Trade, Human characteristics, Public safety, Control measure

Introduction

The most recent report on fatal occupational injuries showed that there were 681 slip-trip-and-fall (STF) related fatalities in 2011 in the United States[1)], which accounted for 14.5% of the overall occupational fatality cases. In addition, there were 299,090 STF-related nonfatal occupational injuries resulting in days away from work in 2011, which accounted for about 25.3% of all occupational injuries in that year[2)]. The construction industry continued to have the highest count of STF-related fatalities[3)], and food servers, healthcare support workers, highway maintenance workers, housekeeping cleaners, and telecommunications line installers experienced the highest rates of nonfatal STF injuries[4)]. Many countries are facing the same challenges as the United States with STF injury problems in the workplace[5)]. Aside from workplace incidents, STFs are the second-leading cause of unintentional death in homes and communities, resulting in more than 25,000 fatalities in 2009[6)]. Often, inhabitants fall from ladders, stairs, uneven surfaces, or wet areas at home. Elderly individuals are particularly at risk. In 2012, more than 3.3 million nonfatal fall injuries among older adults (55 to 85 + years old) were recorded in emergency departments[7)]. Similar concerns are seen worldwide[8)].

Given the prevalence of STF problems, an organized global prevention research and practice effort is warranted. This paper describes a concept for total worker safety for

E-mail: hxh4@cdc.gov

©2014 National Institute of Occupational Safety and Health

preventing global STFs, which improves occupational capability and quality of life at both workplaces and homes. The paper also presents NIOSH research goals on STF prevention, selected NIOSH research activities relevant to the concept of total worker safety for STF control, and some emerging issues on STF.

A Concept of Total Worker Safety for Slip, Trip, and Fall Prevention

STFs occur as a result of a complex interaction of risk factors which can be organized into three categories: personal, environmental, and task-related factors[9] (Table 1). The personal factors include individual differences: age, gender, race, body size, work experience, chronic illness, physical strength, substance use, cognitive capacities, constraints of personal protective equipment (PPE), visual acuity, contrast sensitivity, discrepant vision between the eyes, and expiratory flow rate[8–15]. The environmental factors concern the information available from visual and physical interactions with environments, including elevation perception, moving visual scenes, depth perception, visual ambiguity, visual detection of obstacles and their properties, restricted support surfaces, support surfaces inclination, lighting, building design, and material properties of support surfaces (e.g., friction, contaminants, evenness, loose fixtures, and firmness)[9, 11, 16–21]. The task-related factors include load handling, physical exertion and fatigue, footwear, complexity of tasks, social interactions, and community resources[8, 9, 22–25]. Many of the above-mentioned elements within each of the primary factors resemble the interaction between or among primary factors, although they are classified to belong to only single primary factor.

National and global research efforts on STF vary among government agencies, healthcare institutes, professional societies, and individual safety and health research organizations. Many of the entities have focused on certain aspects of research topics and applications, such as occupational issues, biomarkers, forensics, and elderly falls. As national and global communities are moving to better workplace safety and quality of life as a whole, countering fall hazards and risks faced by workers and community-dwellers on and off the job becomes even more inseparable. Workers use ladders at work. They also use ladders in their homes for household chores. Community members access building floors through stairways at home as well as at workplaces and public facilities. Adequate material properties of walkways and proper lighting are equally critical at work and at home for walkway related fall control. Moreover, a STF injury typically affects a person's ability in performing tasks at the workplace and the home; it may diminish a person's social capacity in the community as well. The settings may differ, but the scientific basis, risk assessment tools, and control strategies for STF are similar. The concept of total worker safety for STF prevention considers integration of current knowledge and research efforts among all aspects to: (1) publicize the importance of STF prevention, (2) advance the identification of risk factors and innovations for STF control, and (3) transfer realistic and effective STF interventions into practice.

Table 1. Risk factors associated with slips, trips, and falls

The Model	Primary factors	Elements
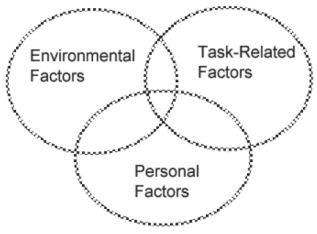 There are intersections of some elements under each of the three primary factors between or among primary factors, although they are classified to belong to a single primary factor	Personal factors	Age, gender, race, body size, work experience, physical strength, chronic illness, substance use, cognitive capacities, constraints of personal protective equipment (PPE), visual acuity, contrast sensitivity, discrepant vision between the eyes, and expiratory flow rate
	Environmental factors	Restricted support surfaces, support surfaces inclination, lighting, building design, material properties of support surfaces (e.g., friction, contaminants, evenness, loose fixtures, and firmness), elevation perception, moving visual scenes, depth perception, visual ambiguity, and visual detection of obstacles and their properties
	Task-related factors	Load handling, physical exertion and fatigue, footwear, complexity of tasks, social interactions, and community resources

NIOSH Research Goals for Slip, Trip, and Fall Prevention

The approach

To effectively reduce STF-related injuries and deaths, a focused effort that considers high-quality research, active partnerships, and research-to-practice actions is necessary. High-quality research refers to organized explorations with meaningful impacts. NIOSH applies the public health approach to identify and address the most compelling STF-related risks facing workers across all industry sectors (Fig. 1). The public health approach includes: incident surveillance, risk identification, intervention, and implementation. Incident surveillance identifies magnitude and severity of problems. Often, injury data systems and fatality reports reveal the trend or changes of STF problems. Risk identification characterizes risks and causes. It is a step to understand why and how STF occurs and who is affected. Intervention refers to design and evaluation of risk controls; both field and laboratory studies can be performed to understand what works and the level of effectiveness. Implementation promotes promising interventions and evaluates their impact and cost-effectiveness; the notion of implementation is to bring STF prevention measures to a broad segment of population and reduce STF at a population level. The public health approach is a continuing process to understand the causes and sources for STF prevention and policy/strategy interventions.

The practice through active partnerships and research-to-practice engagements

In STF prevention using public health approach, active partnerships and research-to-practice engagements are essential. Active partnerships refer to collaborative partnerships with labor, industry, government agencies, academic institutions, and other stakeholders at all stages of program activities. NIOSH values practical solutions and the NIOSH fall prevention program is committed to the development of practical solutions to the complex problems that cause fall injuries and deaths among workers. Collaborative partnerships assure the input from partners at all stages of the public health model to facilitate the linkage of research with the development of practical injury control solutions. Research-to-practice actions refer to the transfer and translation of research findings into effective use. NIOSH places its effort on knowledge transfer to achieve impact for reducing fall risks, injuries, and deaths among workers. The NIOSH Fall Prevention Program strives to conduct research that is oriented to produce effective, practical, prevention measures that can be implemented in workplaces. Every fall prevention research project includes a strategy to promote the transfer and translation of research findings into effective, feasible, prevention practices, products, and technologies that can be adopted in the workplace. These research-to-practice actions correspond to the third and fourth steps of the STF public health approach.

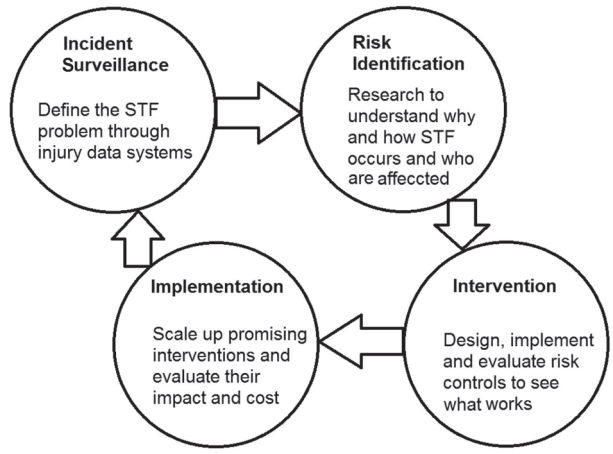

Fig. 1. Public health approach for slip, trip, and fall Prevention.

The goals

While NIOSH research on STF prevention has been occupational in nature, many of the NIOSH research findings, methods, and recommendations for safe practices are equally applicable to non-occupational settings. We are increasing our communication and collaboration with industries, stakeholders, and global partners to advance research efforts on STF control, which would facilitate the implementation of a total worker safety strategy to prevent STFs in the workplace, home, and community. Recently, NIOSH updated its research goals to address the national STF burden.

Three NIOSH goals for STF prevention research are industry specific, emphasizing program activities and directions that are likely to have the greatest impact on preventing fall injuries and deaths in high risk workplaces. They include goals of reducing fall injuries in the construction industry, wholesale and retail trades (WRT), and public safety, services, manufacturing, and other high-risk industries. These efforts emphasize implementing effective, evidence-based STF prevention and protection designs, technologies, programs, and communications materials. The fourth goal focuses on fundamental knowledge and practical solutions for STF prevention in the workplace,

home, and community. NIOSH has proposed retiring the fifth goal, which is to reduce STF injuries in the health services industry. Productive research in this area has been conducted and industry adoption of recommended fall prevention measures has been recognized. These five primary STF prevention goals are further elaborated.

Reducing STF in the construction industry

The construction industry has the highest count of STF-related fatalities among the industries in the United States. NIOSH has had a long history in fall prevention and protection research for construction worker safety and continues to update our research goals for improved industrial impacts. Among the research goals that we have pursued are: (1) inventory of existing fall protection technologies and identification of gaps where technical engineering guidance needs to be developed or modified further for fall protection (such as fall protection anchorage system), (2) development and evaluation of engineering interventions and guidelines to address fall protection gaps (such as aerial lift safety guidelines), (3) partnership with insurance companies and consultation organizations to identify small contractor implementation obstacles associated with existing fall prevention and protection measures (such as fall prevention in residential construction), (4) inventory of existing research, regulations, guidance, and practitioner materials on ladders and identification of key gaps and needs (such as graphic-based extension ladder guidelines), and (5) conducting and evaluating a national construction fall prevention campaign. To efficiently reduce fall incidents in the construction industry during the coming years, NIOSH is focusing its efforts on two goals: "Construction organizations, engineers, architects, and employers in the construction industry will implement effective, evidence-based fall prevention and protection designs, technologies, programs, and communications materials for their structure design and at their worksites" and "Safety research organizations, trade associations, insurance companies, and employers will identify, characterize, and reduce fatal and serious injuries associated with construction falls to a lower level among Hispanic construction workers".

Reducing STF in wholesale and retail trades (WRT) settings

WRT settings have some unique and well-known STF issues. Organized efforts on STF research and prevention, however, are not understood in the literature. NIOSH has a goal for WRT: "Engineers, WRT associations, and employers in the WRT industry will implement effective, evidence-based fall prevention and protection designs, technologies, programs, and communication materials for the handling, storage and retrieval of merchandise". Among the critical research topics are: (1) developing and evaluating innovative fall preventive/protective solutions (strategy, technology, or PPE) addressing merchandise storage and retrieval-associated fall incidents, (2) testing the feasibility of advanced technologies for integration into existing elevation-access devices, and (3) transferring fall prevention innovations (or existing effective fall prevention solutions) and the related fall prevention knowledge into WRT industrial practices, such as in trucking/ transporting and goods retrieval practices.

Reducing fall injuries in the public safety, services, and other high risk industries

STFs associated with special vehicles (e.g., ambulances, fire trucks, and heavy trucks) in the Public Safety sector and STF prevention in the food services industry are among the NIOSH research priority areas. The NIOSH goal states that "Government agencies, vehicle and equipment manufacturers, standards committees, and occupational safety professionals will work together to improve the designs of ambulances, fire trucks, and heavy trucks to reduce the risk of injuries and fatalities associated with falls from these vehicles, and that the food services industry and other high risk industries will implement effective, evidence-based STF prevention programs". Among the identified research efforts are: (1) evaluating vehicle configuration and access system designs of ambulances, fire trucks, and heavy trucks; working with equipment manufacturers to review and consider design enhancement, (2) working with national standards groups to update or develop vehicle configuration and access system standards for special motor vehicles, (3) developing and disseminating guidelines for vehicle configuration and access system use and modifications to reduce slips, trips, and falls among emergency medical services (EMS) personnel, fire fighters, and truck drivers, (4) developing and evaluating promising solutions for STF prevention in the food services industry, (5) conducting intervention trials in the food services industry and developing hazard assessment checklists to evaluate the effectiveness of STF prevention measures, and (6) developing evidence-based guidelines for preventing STF incidents in the food services industry that can serve as the basis of a national STF prevention campaign.

Understanding human characteristics for implementing effective fall control measures

This goal addresses human characteristics, social-organizational characteristics, and biotechnology-based fall control measures which offer fundamental knowledge and practical solutions for STF prevention in the workplace, home, and community. Research organizations can identify human biomarkers, social-organizational characteristics and human-system interface traits that are common precursors to fall incidents, and use them to design out fall risk or craft engineering solutions and organizational interventions to reduce STF incidences. Accordingly, manufacturers can produce improved fall protection devices and systems that effectively reduce the forces on the human body during fall arrest and fall impact. Furthermore, safety professionals and researchers can develop and use comprehensive digital models of human fall dynamics to evaluate new fall prevention and protection technologies, products, and methods as well as to conduct fall injury investigations and verify solutions. Among the identified research efforts are: (1) exploration of physical variations, neurological traits, cognition process, social-organizational, cultural factors, and safety attitudes on fall risk; (2) studying older workers' physical and psychosocial characteristics associated with falls and the mechanisms through which older workers are at increased risk for fall injury, and developing guidance to address risks for occupational falls among older workers; (3) publishing the information on the effectiveness of new strategies, technologies, and sensor enhancement approaches to reduce fall-initiation risk; (4) transferring recommendations to industrial practice on improved sizing systems and configurations of fall protection devices to accommodate current worker populations; (5) developing improved devices or accessories for impact energy or stress relief (such as swing falls and suspension trauma relief during and after a fall incident) and to establish rescue guidelines to further protect workers; (6) developing knowledge databases for improving digital human models on fall dynamics, including the phases of fall initiation and fall termination, for use in efficient evaluation of new fall prevention and protection methods and strategies, in fall incident investigations (reconstruction), and in workers' hazard recognition training, and (7) transferring knowledge databases to digital model developers to develop scientifically comprehensive yet easy-to-use digital modeling modules for use in workplace planning for fall prevention, workers' hazard recognition training, and fall incident investigations.

Fall injury control in the health services industry

NIOSH had a major goal that the health services industry, insurance companies, occupational safety and health professionals, trade associations, manufacturers of safety equipment, government, and fall prevention research organizations will develop and implement a national campaign to promote widespread implementation of comprehensive STF prevention programs. NIOSH has proposed retiring the goal to reduce STF injuries in the health services industry, given productive research that has been conducted as well as industry adoption of recommended protective measures[26]. For example, NIOSH has published a user-friendly STF prevention toolkit targeted toward staff in the healthcare sector that is being adopted by many hospitals nationwide[27].

Activities and Accomplishments

Selected research projects associated with the four NIOSH continuing overarching research goals are presented to illustrate our efforts and accomplishments. These projects target high fall-risk industrial sectors and leading sources of fall incidents which coincide with national workplace and community fall injury data. The first project on ladder safety is within the Construction sector and is also a common STF subject among home owners and general community at large. The second project is on STF control in food services, which is within the Services sector and is also a common STF topic among community dwellers for their activities at home kitchens, restaurants, and public food courts. The third project on safe fire truck aerial system is within the Public Safety sector and is associated with general public at large. The fourth project on fall-arrest harness system safety is within the Construction sector and is a common topic in the commercial building maintenance which affects the general public. The fifth project on scaffolding safety is within the Construction sector and is a common subject for home and community safety indoor and outdoor. The sixth project on human characteristics and biomarkers in fall injury controls is associated with all fall prevention efforts at home and at workplace.

Ladder safety research and innovations

Ladders are one of the most widely-used means of access to elevated surfaces in the workplace in multiple industries (e.g., construction, wholesale and retail, and public safety sectors) and at home. On average more than 164,000 emergency room-treated injuries in the U.S. each year

are related to ladders[28]. What are the current regulations, practice guidelines, and measures to control falls from ladders? What are risk factors, critical knowledge gaps, and emerging issues and technologies to address ladder safety? Partnering with ladder manufacturers, a national ladder safety standards committee, technology research organizations, and other U.S. Government agencies, NIOSH has published literature on solutions and knowledge gaps on extension ladder safety[29]. This research summarized eight key elements of the OSHA standards on ladder safety (Fig. 2) and showed that the underlying causes of falls involving extension ladders include the ladder-base slipping out, ladders tipping, workers slipping while on ladders or transitioning from a ladder to a surface at height, and mechanical failures. The knowledge-gap analysis identified four actions needed to advance ladder-safety practice: (1) research on visual indicators to assist in setting up ladders at the correct angle, (2) developing and evaluating measures to ease the transition from a ladder to a surface at heights, (3) integrating ladder accessories into a convertible design to ease the carrying, assembling, and storing of multiple accessories, and thus to encourage safe practices, and (4) developing a graphic-oriented practical guide for safe ladder use, maintenance, and mechanical-flaw detection.

NIOSH also identified factors affecting extension ladder angular positioning[30]. Ladder users tended to position an extension ladder at a shallower angle than the angle recommended by the current ladder safety standard. This inclination is especially prominent when positioning smaller and lighter ladders, which are more likely to result in sliding-out fall incidents. The current standard anthropometric method (by extending arms horizontally and holding the ladder rails while touching the base of the ladder with the tips of shoes) for extension-ladder setup is a usable approach for safe ladder positioning when it is accurately and correctly performed. This approach is, however, associated with a large variability in set-up angle and requires substantial positioning time. Ladder angle indicators, such bubble levels, could provide accurate ladder positioning with low variability among tasks and users. However, most often ladder angle indicators require multiple incremental adjustments and thus require considerably longer positioning times, which reduce work efficiency and thus negatively affect user acceptance. An innovative inclination indicator developed by NIOSH researchers has been tested to improve the accuracy and reduce the time for ladder positioning. This concept of an inclination indicator with visual, sound, and vibrating functions, has been further developed to become a ladder safety software

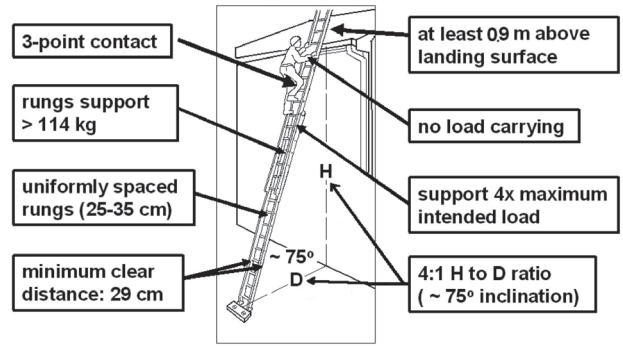

Fig. 2. The key elements of the OSHA standards on ladders − 29CFR Safety and Health Regulations for Construction subsection 1926.1053 (Hsiao *et al*., 2008).

application (app) for mobile devices which features a multimodal indicator and a graphic-oriented guide for ladder selection, inspection, positioning, accessorizing, and safe use[31] (Fig. 3). The app was downloaded more than 22,000 times during its first year of release. The app also has been highly rated and widely adopted by more than 50 organizations, many state officials, industry leaders, and safety professionals, and has received considerable international attention. The literature, scientific study outcomes, and the mobile device safety application provide both a scientific basis and practical tools to reduce the risk of fall injury for millions of ladder users across many industries, homes, and communities.

Slips, trips, and falls control in food services

Food preparation workers and non-restaurant food servers are among the groups with high fall-on-the-same-level incident rates, with rates of 61.2 and 65 per 10,000 full-time workers, respectively[2]. Partnering with one of the largest food service companies in the US, NIOSH is evaluating the effectiveness of slip-resistant shoes as part of comprehensive prevention programs in reducing STF injuries in the food services industry. This study is a randomized controlled trial with the participation of approximately 4,000 employees for a four year period[32]. The research will impact worker safety by providing scientific evidence and business case support for a comprehensive STF prevention program to reduce STF injuries among food service workers. Food service companies, initially hesitant to expend time and money on prevention programs with unknown effectiveness, could use these findings to help justify implementing prevention strategies. The information will be equally useful for food handling persons at schools and food courts.

Fig. 3. A ladder safety software application (app) for mobile devices features a multimodal indicator and a graphic-oriented guide for ladder selection, inspection, positioning, accessorizing, and safe use (Simeonov *et al*., 2013).

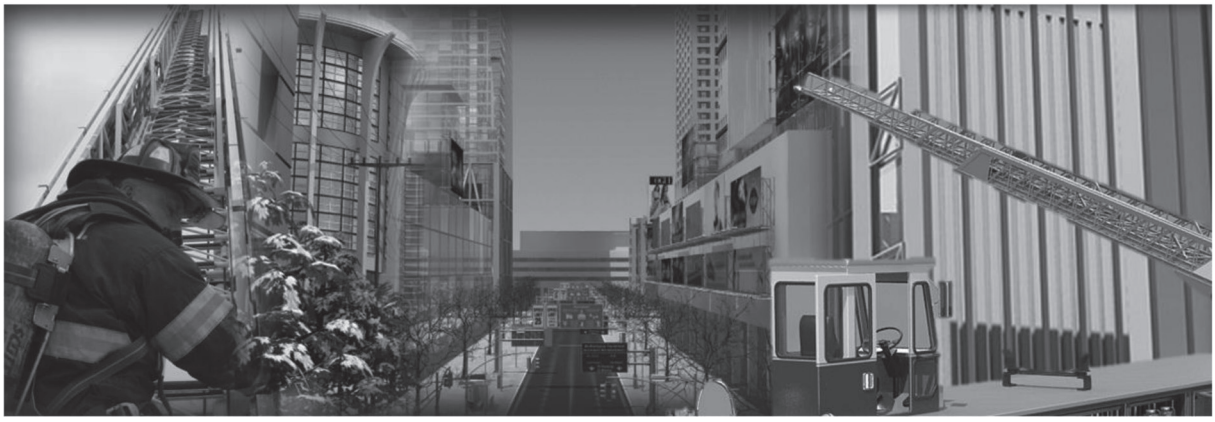

Fig. 4. Aerial ladders represent a unique source of fall risk. The rung spacing is 36 cm in the current design as oppose to the 30 cm spacing of industrial ladders. The wide range of setting angles required during different firefighting scenarios represents a significant challenge to firefighters. At the vertical setting, the aerial ladder works like an extended fix ladder. At the horizontal setting, the aerial ladder acts like a stair with many holes.

Safe fire truck aerial system

A turntable telescopic ladder is perhaps the best-known form of specialized aerial firefighting apparatus, and is used to gain access to fires occurring at heights or areas inaccessible to conventional ground-based ladders. Ascending and descending aerial apparatus present a significant source of fall risk due to apparatus space constraints and challenges in firefighter-apparatus-interface design in accommodating the uses at various ladder heights and angles, from almost vertical to almost horizontal settings (Fig. 4). The environmental constraints of firefighting scenes and the increased physical and mental loads of bunker gear on firefighters often worsen the fall risk. NIOSH is conducting a series of research projects on the ergonomic design of aerial ladder systems[33]. Among the objectives are: (1) determination of optimal rung spacing, (2) identification of range of optimal angles for aerial ladder use, and (3) development of an automated dynamic rung profile that presents a stable horizontal footing surface independent of aerial ladder slope angle.

Fall-arrest harness system safety

The Occupational Safety and Health Administration (OSHA) promulgated a construction standard in 1998 that full-body harnesses replace waist belts for fall arrest in personal fall arrest systems[34]. This provided improved protection against falls from height for 6.3 million construction workers. Some knowledge gaps remain on suspension trauma risk and how harness fit affects dynamic loading to the head and neck during fall arrests as well as on information about optimal harness sizing and design to accommodate diverse worker populations. Partnering

Fig. 5. NIOSH has had studies on harness sizing and design to accommodate diverse worker populations, suspension trauma risk, and how harness fit affects dynamic loading to the head and neck during fall arrests.

with harness manufacturers, national safety standards committees, and research organizations, NIOSH has published improved sizing systems and suggested specification ranges for harness straps[35, 36] and has identified factors that affect harness-body fit and interface[37] (Fig. 5). Increased harness thigh strap angle and low harness back D-ring location were found to correlate to post-fall harness poor fit. NIOSH also has reported the effects of body characteristics and harness fit on human suspension tolerance time[38] and the merits and risks of fall-arrest system use for operators of mechanized access platforms[39]. Decreased suspension tolerance time was associated with body size (i.e., weight, stature, upper- and lower-torso depths; $r=-0.36 \sim -0.45$, $p \leq 0.03$). Also, workers with a torso angle of suspension above 35°, a thigh strap angle above 50°, or a poorly-fitting harness size, had shorter suspension tolerance time (mean differences = 14, 11, and 9.8 minutes respectively, $p \leq 0.05$).

Scaffolding safety in fall injury prevention

Dismantling of frame scaffolds was reported as one of the most hazardous tasks for the carpenter trade in the construction industry due to overexertion and fall hazards[40]. A significant portion of these hazards are associated with scaffold-end-frame (23 kg) dismantling tasks which require both muscle strength and postural balance skills (Fig. 6a). Most workers tend to place their hands at the below-hip locations to generate greater lifting power. They, however, face a fall risk once they lift up the end frame; the center of mass of the end frame is far above their hands and thus difficult to manipulate. NIOSH studies demonstrated that hand location between elbow height and chest height with a hand separation distance of 46 cm would allow workers to generate sufficient isometric strength to disassemble typical 23 kg scaffolds while concurrently allowing them to mitigate the likelihood of postural imbalance[41] (Fig. 6a).

As scaffolding technology has advanced, mast climbing work platforms (a new elevating system that can lift construction workers to extreme elevations) are increasingly being used in major construction projects in the U.S. with some 4,200 operations daily[42] (Fig. 6b). Increasing numbers of high-visibility incidents (i.e., multiple fatalities) have occurred in recent years, which concern OSHA and many construction safety officials. NIOSH is conducting research to identify fall protection strategies and effective intervention programs for workers who are at risk of injury from work at elevation on mast climbing work platforms, using both computer modeling and field testing approaches. The end products will include prevention strategies and informational literature associated with mast climbing work platform fall protection systems for use by standards committees, manufacturers, employers, and workers.

Human characteristics and biomarkers in fall injury controls

The majority of human falls can be regarded as loss-of-balance incidents. Factors that may lead to disruption of balance include lack of adequate visual cues, inadequate

(a) (b)

Fig. 6. (a) Scaffold-end-frame dismantling tasks require both muscle strength and postural balance skills (left). A set of tools or scaffold components (white bars) that encourages a hand separation distance of 46 cm would support workers to generate sufficient isometric strength to disassemble typical 23 kg scaffolds while concurrently allowing them to mitigate the likelihood of postural imbalance. (b) Mast climbing work platforms are increasingly being used in major construction projects in the U.S.

lighting or visual information in the work environment, narrow and inclined support surfaces, unexpected changes in surface properties, load handling, physical exertion, fatigue, task complexity that diverts workers' attention, individual differences, lack of work experience and training, and the physiological and mental load imposed by personal protective equipment[9]. NIOSH has conducted a series of studies on human characteristics and biomarkers with practical implications to advance fall injury controls. For instance, a simple vertical structure, e.g., a narrow bar, available in line of sight can serve as a visual cue to assist workers' balance[43]. The finding may be useful in modifying elevated work environments and construction procedures to improve workers' postural balance during construction or structure repair jobs. In addition, at elevation, workers depend heavily on sensory information from their feet to maintain balance. Sensory suppression associated with elevated vibration levels at a work site may increase the risk of losing balance. Mechanical vibration transmitted to walking/working surfaces through supporting structures needs to be controlled when workers are performing tasks at elevation[44]. Moreover, NIOSH studies showed that shoes with characteristics of tight fit, good motion control of the rear, high flexibility of the front, moderate torsional stiffness, and a very flexible high-cut upper can minimise the risk of loss of balance, making them a better choice than casual shoes for work on elevated and narrow surfaces[45].

An assessment of accomplishments and impacts

With the presented five major STF prevention goals in mind and several research activities previously described, readers are likely interested in knowing what went well, what is in progress, and what will be done next. While using the public health approach in STF prevention research and practice, it makes sense to categorize our accomplishments and impacts by human factors engineering control, safety engineering control, administrative control and field evaluation, and personal protective equipment enhancement for each major goal (Table 2). The circles in Table 2 denote the areas where we have demonstrated substantial impact. The triangles indicate activities that are progressing well. The crosses signify gaps to be filled. The impact status for each major research area under each major goal is also presented in Table 2. For instance, roofs, ladders, and heavy equipment are the three main sources of fall injury incidents in the construction industry, and NIOSH has successfully identified and implemented solutions to reduce these incidents. As Table 2 has demonstrated, we have made substantial impact in the areas of construction and healthcare service. We are making progress in trucking and human characteristics research. Some gaps remain in preventing falls in food service and from service vehicles.

Emerging Issues: For Total Worker Safety for Slip, Trip, and Fall Control

Five STF-related emerging issues deserve a discussion. First, populations of a given age, gender, ethnicity,

Table 2. An assessment of NIOSH accomplishments and impacts in STF research and practice

Fall prevention and protection		Human factors engineering control	Safety engineering control	Administrative control	Personal protective equipment	Current impact
Construction sector	Roofing safety	●	●	●	●	●
	Ladder safety	●	▲	●	X	●
	Heavy equipment	▲	▲	▲	▲	▲
Wholesale and retail	Trucking	▲	X	▲	X	▲
	Goods retrieval	X	X	▲	X	X
Services sectors	Emergency response	▲	▲	▲	▲	▲
	Food services	▲	▲	▲	X	▲
Human characteristics	Biomedical infor.	▲	X	▲	X	▲
	Control evaluation	▲	▲	X	▲	▲
	Aging workforce	X	X	▲	X	X
	Hispanic workforce	▲	X	▲	X	X
Healthcare sector	Healthcare service	●	●	●	X	●
	National campaign	●	●	●	▲	●

● = having substantial impact; ▲ = progressing well; X = gaps to be filled

and occupation may have unique body size and shape compositions. Workplaces, community environments, and PPE need to be adequately designed to accommodate diverse populations. Through anthropometric research, NIOSH has provided both scientific theories and practical manufacturing information to advance harness design for protecting workers from fall injury in the construction sector. Developing improved protective gear, better home and community environments, and user-friendly assist devices for fall prevention that fit diverse population groups is a significant agenda for the research community. Second, in this new era of changing technology, there are unique issues in the booming green energy and digital communication businesses in which safety professionals can make a significant contribution (e.g., safe erection of wind turbines and communication towers). Third, workers of specific age, social, and economic characteristics may have unique vulnerabilities for fall injury. It is important to focus on these populations, particularly as they have been largely underserved in the past. One example is the study of the constraints of aging workforces in coping with injury risks. Injury data systems have shown that 42% of fatal STF victims in 2011 were age 55 and above[3)].

Furthermore, innovation and implementation should be an important chapter in total worker safety in STF control. Current design paradigms provide a framework to build upon but may limit design creativity. It took 20 yr for airbags to become a standard safety device for reducing motor vehicle-crash-related injuries. While skeptics will always exist with the introduction of new technologies (e.g., the concept of wearable airbags) to combat falls, with advancements in durability and reduction of cost, wearable airbags to reduce fall-related injuries may become an integral part of worker fall protection systems in the near future. The notion is equally valuable in protecting inhabitants during household-chore activities (e.g., window cleaning) and reducing resident fall injury risk in healthcare or homecare settings during daily activities.

Finally, smart phone based safety software applications (apps) represent an emerging area of total worker safety for STF control. Many STF risk exposure assessment tools and safety guidelines can be developed into mobile apps for STF prevention in workplaces and homes. The NIOSH ladder safety mobile app mentioned in the "Ladder Safety Research and Innovations" subsection is a successful example. The app is available for Apple and Android mobile devices both in English and Spanish and has been downloaded more than 22,000 times in 12 months.

Summary

STF research has long been recognized as one of the most important and needed areas of occupational and non-occupational injury prevention research. The complex and multifactorial nature of STFs in workplaces, homes, and communities demands a proactive and systematic approach to prevention. A total worker safety strategy for STF prevention offers an opportunity to integrate science-based information to publicize the importance of fall prevention and further STF risk factor identification and control. It also facilitates practical and effective STF innovations and implementation in the community. To maxi-

mize the benefits of the opportunity, collaborations should be actively implemented among national and international government entities, medical institutes, technology firms, STF control assist-device developers, and research centers to develop global research agendas, promote knowledge exchange, and conduct joint research. The NIOSH effort on total worker safety for STF prevention along with existing accomplishments and impacts may serve as a model for global entities that have a similar mission and passion in STF control at homes, communities, and workplaces.

Disclaimer

The findings and conclusions in this article are those of the author and do not necessarily represent the views of the National Institute for Occupational Safety and Health (NIOSH). Mention of company names or products does not imply an endorsement from NIOSH.

References

1) Fatal occupational injuries by event or exposure for all fatal injuries and major private industry sector, All U.S., 2011 (Table A-9) April 25, 2013. Washington D.C.: U.S. Bureau of Labor Statistics, http://www.bls.gov/iif/oshwc/cfoi/cftb0267.pdf. Accessed July 4, 2013.
2) Nonfatal occupational injuries and illnesses requiring days away from work, 2011, November 8, 2012. Washington D.C.: U.S. Bureau of Labor Statistics, http://www.bls.gov/news.release/archives/osh2_11082012.pdf. Accessed July 4, 2013.
3) Table A-8Fatal occupational injuries by event or exposure and age 2013. Washington D.C.:U.S. Bureau of Labor Statistics, http://www.bls.gov/iif/oshcfoi1.htm#2011/cftb0266.pdf. Accessed July 21, 2013.
4) U.S. BLS (2011) Nonfatal occupational injuries and illnesses requiring days away from work, 2010, Table 16. Washington D.C.: U.S. Bureau of Labor Statistics, http://www.bls.gov/news.release/archives/osh2_11092011.pdf. Accessed July 18, 2013.
5) NIOSH (2011) Research and practice for fall injury control in the workplace. DHHS Publication No. 2012–103, National Institute for Occupational Safety and Health, Morgantown.
6) Slips, trips and falls fact sheet 2011. Itasca, IL: National Safety Council, http://www.nsc.org/safety_home/HomeandRecreationalSafety/Falls/Documents/ Slips%20Trips%20and%20Falls_FINAL.pdf. Accessed July 4, 2013.
7) Leading Causes of Nonfatal Injury Reports2001−2011, WISQARS 2013. Atlanta, GA: National Center for Injury Prevention and Control, Centers for Disease Control and Prevention, http://webappa.cdc.gov/sasweb/ncipc/nfilead2001.html. Accessed July 22, 2013.
8) WHO (2007) WHO Global Report on Falls Prevention in Older Age, World Health Organization, Geneva.
9) Hsiao H, Simeonov P (2001) Preventing falls from roofs: a critical review. Ergonomics **44**, 537–61. [Medline] [CrossRef]
10) Knudtson MD, Klein BE, Klein R (2009) Biomarkers of aging and falling: the Beaver Dam eye study. Arch Gerontol Geriatr **49**, 22–6. [Medline] [CrossRef]
11) Gauchard G, Chau N, Mur JM, Perrin P (2001) Falls and working individuals: role of extrinsic and intrinsic factors. Ergonomics **44**, 1330–9. [Medline] [CrossRef]
12) Tinetti ME, Speechley M (1989) Prevention of falls among the elderly. N Engl J Med **320**, 1055–9. [Medline] [CrossRef]
13) Mesure S, Amblard B, Crémieux J (1997) Effect of physical training on head-hip co-ordinated movements during unperturbed stance. Neuroreport **8**, 3507–12. [Medline] [CrossRef]
14) Robertson S, Collins J, Elliott D, Starkes J (1994) The influence of skill and intermittent vision on dynamic balance. J Mot Behav **26**, 333–9. [Medline] [CrossRef]
15) Black SE, Maki BE, Fernie GR (1993) Aging, imbalance, and falls. In: The Vestibulo-Ocular Reflex and Vertigo, Sharpe JA and Barber HO (Eds.), 317−35. Raven Press, New York.
16) Bles W, Kapteyn TS, Brandt T, Arnold F (1980) The mechanism of physiological height vertigo. II. Posturography. Acta Otolaryngol **89**, 534–40. [Medline] [CrossRef]
17) Brandt T, Arnold F, Bles W, Kapteyn TS (1980) The mechanism of physiological height vertigo. I. Theoretical approach and psychophysics. Acta Otolaryngol **89**, 513–23. [Medline] [CrossRef]
18) Paulus WM, Straube A, Brandt T (1984) Visual stabilization of posture. Physiological stimulus characteristics and clinical aspects. Brain **107**, 1143–63. [Medline] [CrossRef]
19) Peterka RJ, Benolken MS (1995) Role of somatosensory and vestibular cues in attenuating visually induced human postural sway. Exp Brain Res **105**, 101–10. [Medline] [CrossRef]
20) Clark M, Jackson P, Cohen HH (1996) What you don't see can hurt you: understanding the role of depth perception in slip, trip, and fall incidents. Ergon Des **4**, 16–21.
21) Lasley DJ, Hamer RD, Dister R, Cohn TE (1991) Postural stability and stereo-ambiguity in man-designed visual environments. IEEE Trans Biomed Eng **38**, 808–13. [Medline]
22) Commissaris DA, Toussaint HM (1997) Load knowledge affects low-back loading and control of balance in lifting tasks. Ergonomics **40**, 559–75. [Medline] [CrossRef]
23) Seliga R, Bhattacharya A, Succop P, Wickstrom R, Smith D, Willeke K (1991) Effect of work load and respirator wear on postural stability, heart rate, and perceived exertion. Am Ind Hyg Assoc J **52**, 417–22. [Medline] [CrossRef]

24) Zohar D (1978) Why do we bump into things while walking. Hum Factors **20**, 671–9. [Medline]
25) Patla AE (1997) Understanding the role of vision in the control of human locomotion. Gait Posture **5**, 54–69. [CrossRef]
26) National Institute for Occupational Safety and Health (NIOSH) Traumatic Injury Research and Prevention Program and Strategic Goals 2013. http://www.cdc.gov/niosh/programs/ti/pdfs/TIStrategicPlan.pdf. Accessed July 22, 2013.
27) NIOSH (2011) Slip, trip, and fall prevention for healthcare workers. NIOSH publication No. 2011-123, National Institute for Occupational Safety and Health, Morgantown.
28) Product Safety AlertCPSC Offers Safety Tips to Prevent Ladder Injuries, in Public Hearing on Commission Agenda and Priorities for FY 2013, 2011. Bethesda, MD: Consumer Product Safety Commission, http://www.cpsc.gov/PageFiles/90269/prescomm07202011.pdf. Accessed July 4, 2013.
29) Hsiao H, Simeonov P, Pizatella T, Stout N, McDougall V, Weeks J (2008) Extension-ladder safety: solutions and knowledge gaps. Int J Ind Ergon **38**, 959–65. [CrossRef]
30) Simeonov P, Hsiao H, Powers J, Kim IJ, Kau TY, Weaver D (2013) Research to improve extension ladder angular positioning. Appl Ergon **44**, 496–502. [Medline] [CrossRef]
31) Simeonov P, Hsiao H, Powers J(2013) Spotlight: NIOSH ladder safety app for mobile devices, Fall Injuries Prevention in the Workplace. http://www.cdc.gov/niosh/topics/falls/. Accessed July 4, 2013.
32) Bell J (2009) Evaluation of STF Prevention Practices in Food Services. http://www.cdc.gov/niosh/topics/falls/projects.html. Accessed July 22, 2013.
33) Simeonov P, Hsiao H (2013) Reducing Firefighter Fall Risk: Safe Fire Truck Aerial System. http://nppm.cdc.gov/Reports/Default.aspx?type=public&rpt=Comprehensive+Report_PV. Accessed July 4, 2013.
34) Safety and health regulations for construction, Subpart M: Fall protection,1926.502(d) 2011. http://www.osha.gov/pls/oshaweb/owadisp.show_document?p_table=STANDARDS&p_id=10758. Accessed July 4, 2013.
35) Hsiao H, Friess M, Bradtmiller B, Rohlf FJ (2009) Development of sizing structure for fall arrest harness design. Ergonomics **52**, 1128–43. [Medline] [CrossRef]
36) Hsiao H, Whitestone J, Taylor S, Godby M, Guan J (2009) Harness sizing and strap length configurations. Hum Factors **51**, 497–518. [Medline] [CrossRef]
37) Hsiao H, Whitestone J, Kau TY (2007) Evaluation of fall arrest harness sizing schemes. Hum Factors **49**, 447–64. [Medline] [CrossRef]
38) Hsiao H, Turner N, Whisler R, Zwiener J (2012) Impact of harness fit on suspension tolerance. Hum Factors **54**, 346–57. [Medline] [CrossRef]
39) Pan CS, Powers JR, Hartsell JJ, Harris JR, Wimer BM, Dong RG, Wu JZ (2012) Assessment of fall-arrest systems for scissor lift operators: computer modeling and manikin drop testing. Hum Factors **54**, 358–72. [Medline] [CrossRef]
40) National Constructors Association (1985) An assessment of carpenter injury risks needing research. NIOSH Unpublished Contract Report.
41) Cutlip R, Hsiao H, Garcia R, Becker E, Mayeux B (2002) Optimal hand locations for safe scaffold-end-frame disassembly. Appl Ergon **33**, 349–55. [Medline] [CrossRef]
42) Pan C (2010) Fall Injury Assessment for Emerging Mast Scaffold Technology. http://www.cdc.gov/niosh/topics/falls/projects.html. Accessed July 22, 2013.
43) Simeonov P, Hsiao H, Hendricks S (2009) Effectiveness of vertical visual reference for reducing postural instability on inclined and compliant surfaces at elevation. Appl Ergon **40**, 353–61. [Medline] [CrossRef]
44) Simeonov P, Hsiao H, Powers J, Ammons D, Kau T, Amendola A (2011) Postural stability effects of random vibration at the feet of construction workers in simulated elevation. Appl Ergon **42**, 672–81. [Medline] [CrossRef]
45) Simeonov P, Hsiao H, Powers J, Ammons D, Amendola A, Kau TY, Cantis D (2008) Footwear effects on walking balance at elevation. Ergonomics **51**, 1885–905. [Medline] [CrossRef]