Information Circular 8950

Fresnel Lens Blind Area Viewers for Improved Mine Equipment Safety and Productivity

By Guy A. Johnson

UNITED STATES DEPARTMENT OF THE INTERIOR
James G. Watt, Secretary

BUREAU OF MINES
Robert C. Horton, Director

Library of Congress Cataloging in Publication Data:

Johnson, Guy A

Fresnel lens blind area viewers for improved mine equipment safety and productivity.

(Information circular ; 8950)

Includes bibliographical references.

Supt. of Docs. no.: I 28.27:8950.

1. Mining machinery—Blind-area viewers. 2. Fresnel lenses. I. Title. II. Series: Information circular (United States. Bureau of Mines) ; 8950.

TN295.U4 [TN345] 622s [622'.8] 83-150 13

CONTENTS

	Page
Abstract	1
Introduction	2
Design, development, and debugging of first-generation prototype	5
Second-generation, low-profile design	6
Related work on collision protection of mine equipment	11
Commercialization and cost-effectiveness analysis	13
Summary	15

ILLUSTRATIONS

1. A 220-ton-capacity truck undergoing maintenance in an Arizona copper mine. 3
2. Typical blind areas around a large haulage truck 3
3. Maintenance vehicle run over by a large haulage truck 4
4. Large front-end loader backing over a pickup truck 4
5. Typical "whip" used in surface mines to warn haulage truck drivers of the presence of smaller vehicles 6
6. Components of the improved visibility system for large haulage vehicles 6
7. Increased driver field-of-view with the improved system for large haulage trucks 7
8. Improved right-side visibility with the downward-looking blind area viewer 7
9. Components of the first-generation fresnel lens blind area viewer 8
10. In-mine, on-vehicle test of first-generation prototype hardware 8
11. Design of second-generation blind area viewer 10
12. Second-generation blind area viewer 10
13. Mockup testing of the second-generation blind area viewer 11
14. View through the second-generation blind area viewer during the mockup testing 11
15. Initial in-mine testing of second-generation blind area viewers on a 170-ton-capacity truck 12
16. On-truck testing of three viewers 13
17. Testing the viewer on the back of a large front-end loader 14
18. View of a car through the blind area viewer on a large front-end loader 14
19. Close-in collision warning device 15
20. Prototype CCTV rear-viewing system in an Arizona copper mine 15

TABLES

1. In-mine testing of the first-generation improved visibility system prototype hardware 5
2. In-mine testing of the second-generation, low-profile blind area viewers 9

FRESNEL LENS BLIND AREA VIEWERS FOR IMPROVED MINE EQUIPMENT SAFETY AND PRODUCTIVITY

By Guy A. Johnson [1]

ABSTRACT

Combining contract and in-house research, the Bureau of Mines has developed and in-mine-tested a novel device to improve the field-of-view of operators of off-highway mining equipment. This device utilizes a downward-looking, flat fresnel lens. The lens, plus louvers to reduce glare, is housed in a protective steel structure. The complete unit is called a blind area viewer. The viewer, when mounted on the right-front corner of the deck of most large haulage trucks, will increase a driver's direct field-of-view from about 35 pct (of where he/she has to drive) to about 80 pct. The improved visibility allows the driver to see possible collision hazards and roadway obstacles better, thus improving mine safety and increasing productivity. Economic analysis shows that the blind area viewers, which are now commercially available, pay for themselves in about a month on a 170-ton-capacity truck. The viewers are also applicable to other large mining equipment, such as front-end loaders, draglines, and downhole drills, or any place where seeing around a corner would be advantageous, such as along conveyor flights in processing plants during startups.

[1]Supervisory mining engineer, Twin Cities Research Center, Bureau of Mines, Minneapolis, Minn.

INTRODUCTION

As mine haulage equipment becomes larger in order to increase productivity and cut costs, the driver's field-of-view becomes more restricted because the truck's cab is pushed back under the protection of the truck box lip. Also, in order to increase maintenance efficiency, a great deal of ancillary equipment is installed on the truck's radiator deck, thereby further restricting the driver's view and increasing the hazard of mine vehicle collisions. Other problems, such as excessive tire wear and slow vehicle movement, can be related to the driver's inability to see clearly the haulage road and the loading and dumping areas.

To help solve this growing problem of impaired visibility, the Bureau of Mines worked with mining officials, heavy equipment manufacturers, and personnel of the Mine Safety and Health Administration to develop and in-mine test reasonably priced, rugged hardware for retrofit on large haulage vehicles. One possible solution was to use closed-circuit television (CCTV) technology, but Bureau research indicated that although CCTV may help to reduce specific problems that occur during backing up at high dump points (e.g., mountain tops), expensive maintenance is required in order for the system to be reliable in the harsh mining environment. Another option was to improve mirror technology. The use of larger convex mirrors provided a simple and good way to improve the rearview capability. However, the major hazard area of a vehicle--the right-front blind area--still existed. This led to the development of the fresnel lens blind area viewer.[2]

Although operators of today's huge equipment need improved field-of-view, it should be emphasized that smaller equipment can also use relevant technology. As an example, there is much congestion in many sand and gravel and crushed stone operations, especially those where the public has access to the pit and plant. A medium-sized front-end loader can easily back over a street vehicle parked in its rear blind area. Installing fresnel lens blind area viewers on the rear of front-end loaders is proving very worthwhile in such situations. Also, because there is much pedestrian traffic in uranium pits (for example, geologists directing the loaders to the highest grade material), viewers are needed by even the small, 35-ton-capacity trucks. These trucks have a bad right-front blind area, and a driver, especially on a hard right turn, can easily be on top of in-pit personnel before there is time to avoid them.

Most of the references to mine equipment in this report target the sort of large haulage vehicles shown in figure 1, but their extensive blind areas (fig. 2) and resulting danger (as dramatized by the crushed maintenance vehicle in figure 3) are typical of other large equipment such as front-end loaders (fig. 4).

---

[2]Bureau of Mines. Improved Visibility Aids for Large Haulage Vehicles. Technol. Transfer film, 1980, 14 min.

Johnson, G. A. Improved Visibility System for Large Haulage Trucks. Pres. at 1980 Off-Highway Equipment Show, Milwaukee, Wis. SAE preprint 800934, 17 pp.; available from G. A. Johnson, Twin Cities Research Center, BuMines, Minneapolis, Minn.

_____. Improved Visibility Systems. Paper in Surface Mine Truck Safety. Proceedings: Bureau of Mines Technology Transfer Seminars, Minneapolis, Minn., June 25, 1980, Birmingham, Ala., July 9, 1980, and Tuscon, Ariz., July 24, 1980. BuMines IC 8828, 1980, pp. 22-39.

FIGURE 1. - A 220-ton-capacity truck undergoing maintenance in an Arizona copper mine.

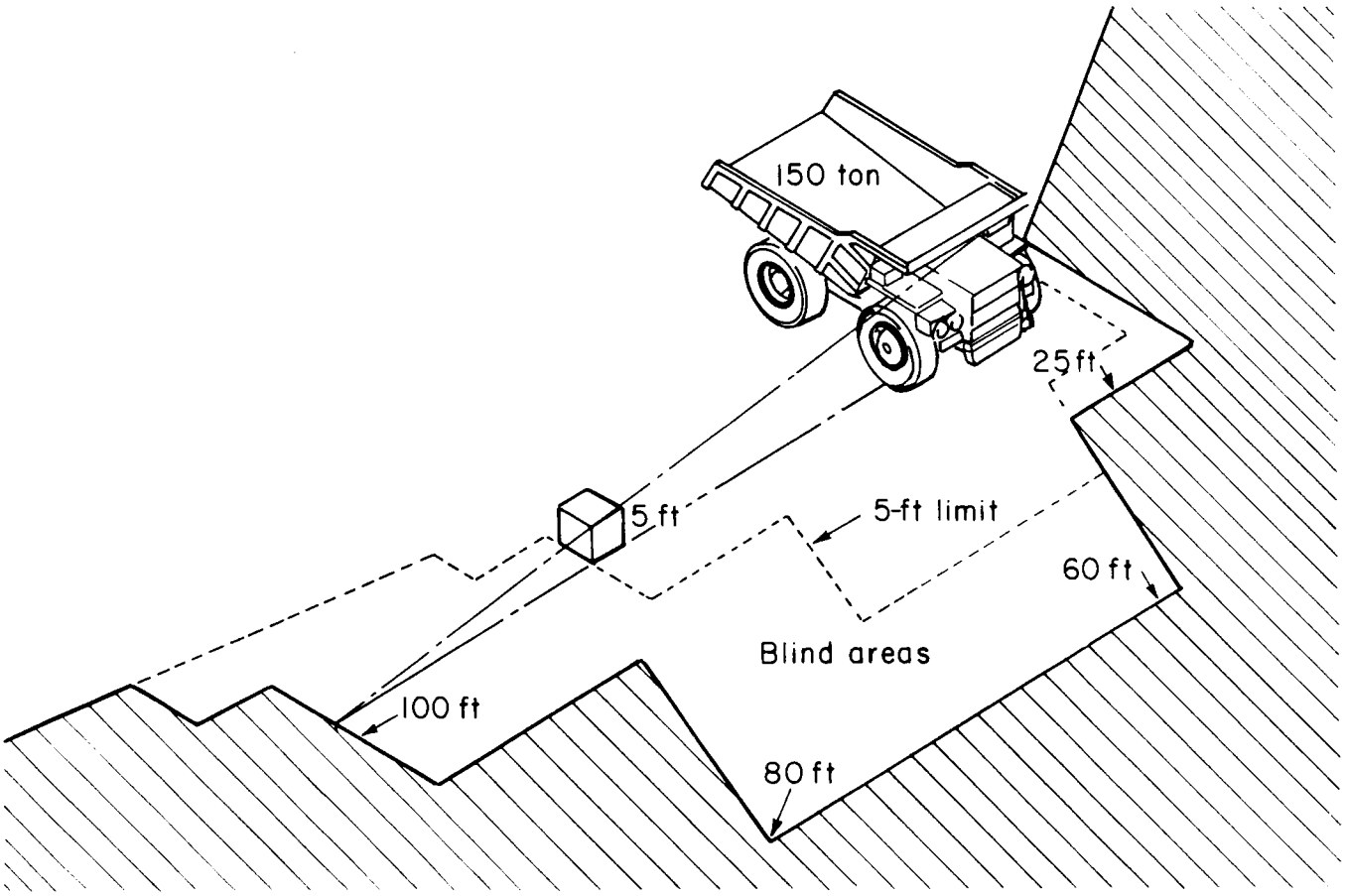

FIGURE 2 Typical blind areas around a large haulage truck

FIGURE 3. - Maintenance vehicle run over by a large haulage truck.

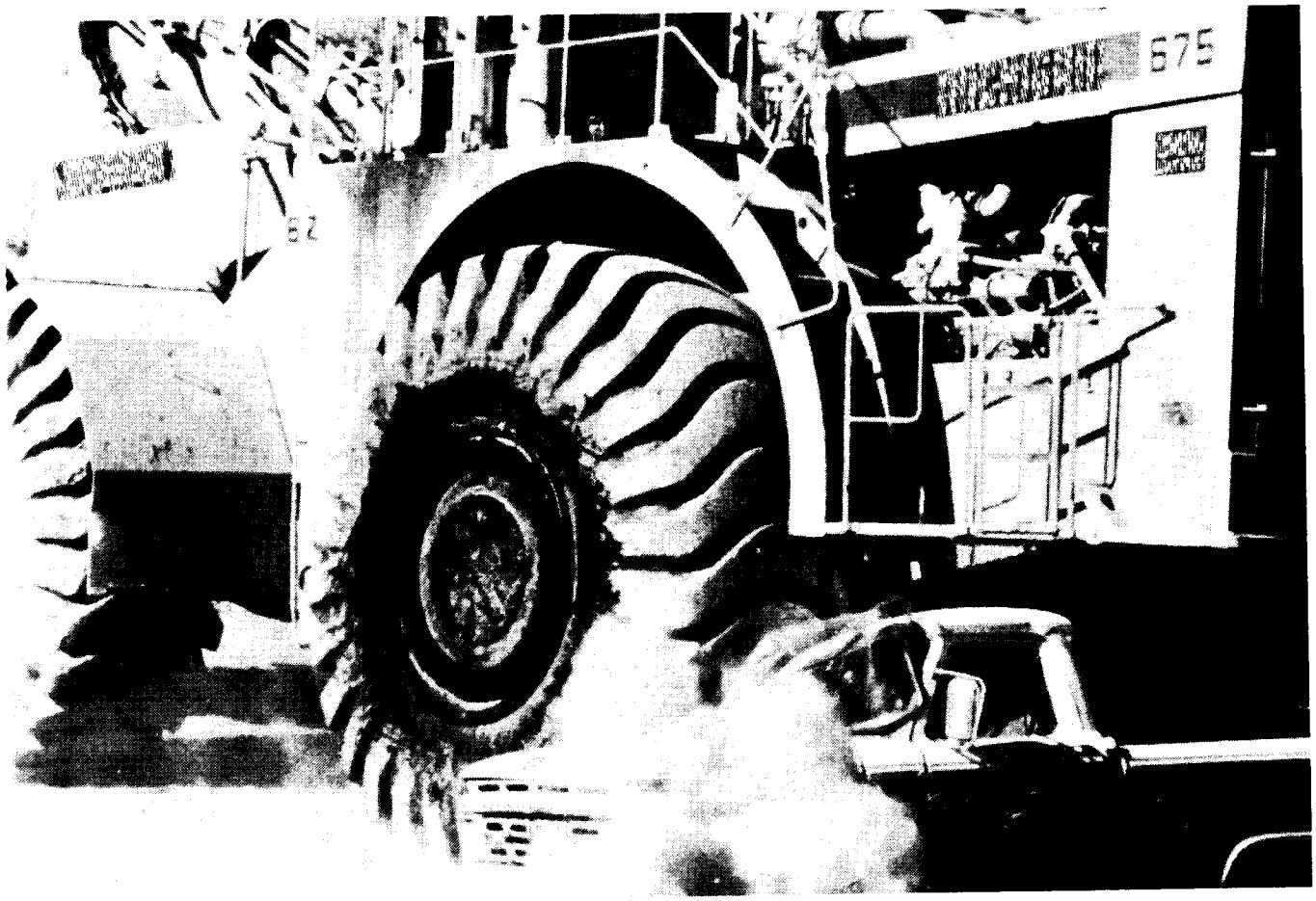

FIGURE 4. - Large front-end loader backing over a pickup truck.

DESIGN, DEVELOPMENT, AND DEBUGGING OF FIRST-GENERATION PROTOTYPE

In 1976, the Bureau contracted with the Tracor MBA Corp. to study the visibility problem and outline solutions. This work was built on the successful development and testing of automatic fire protection systems for large haulage vehicles. It followed the philosophy that not only was laboratory work necessary, but the resulting equipment must also be subjected to in-mine, on-vehicle testing so as to properly debug the hardware and demonstrate its effectiveness.

Simple solutions were evaluated, such as the extensive use of whiplike antennas to serve as warning devices (fig. 5), but only temporary attention was given to these flags by haulage truck drivers. The next step was to develop a family of devices that could be retrofitted to the haulage truck itself to improve the driver's field-of-view. This complete system, consisting of improved right- and left-hand mirrors, ruggedized closed-circuit television, and fresnel lens blind area viewers (fig. 6), improved the driver's field-of-vision significantly (fig. 7). The most important component of the system was the front-right-mounted viewer. It allowed a direct view of a truck's most collision-prone area (fig. 8). The viewer combined the downward-looking ability of a flat fresnel lens (the grooves bend the light like a prism) with glare control louvers to keep incoming light from blinding the driver (fig. 9).

This first-generation improved system prototype was taken to Kaiser Steel's Eagle Mountain Mine near Palm Springs, Calif., in 1977 for a short-term test. This evaluation involved mounting three blind area viewers, a backup CCTV system, and improved mirrors on a 170-ton-capacity truck and operating the vehicle for 1 week (fig. 10). The success of this demonstration prompted the Bureau to subject the prototype hardware to long-term testing in three more mines in 1977 and 1978 (the Decker Mine in Decker, Mont., the Erie Mine in Hoyt Lakes, Minn., and the Belle Ayr Mine south of Gillette, Wyo.). Details of the testing are shown in table 1.

TABLE 1. - In-mine testing of the first-generation improved visibility system prototype hardware

Site	Haulage truck capacity, tons	Mine type	Comments
Eagle Mountain Mine, Kaiser Steel Corp., Eagle Mountain, Calif.	170	Iron ore	3 viewers were used on front-right side of vehicle for full coverage. Also, a first-generation CCTV was tried on back of truck.
Erie Mine, Pickands Mather & Co., Hoyt Lakes, Minn.	100	Taconite	3 viewers, plus the CCTV and mirror prototypes, were tried in this cold-weather environment.
Belle Ayr Mine, AMAX Coal Co., Gillette, Wyo.	120	Coal....	3 viewers were tested on 2 trucks.
Decker Mine, Peter Kewit Co., Decker, Mont.	120	Coal....	Right- and left-hand prototypes, plus the CCTV, were tested.

FIGURE 5. - Typical "whip" used in surface mines to warn haulage truck drivers of the presence of smaller vehicles.

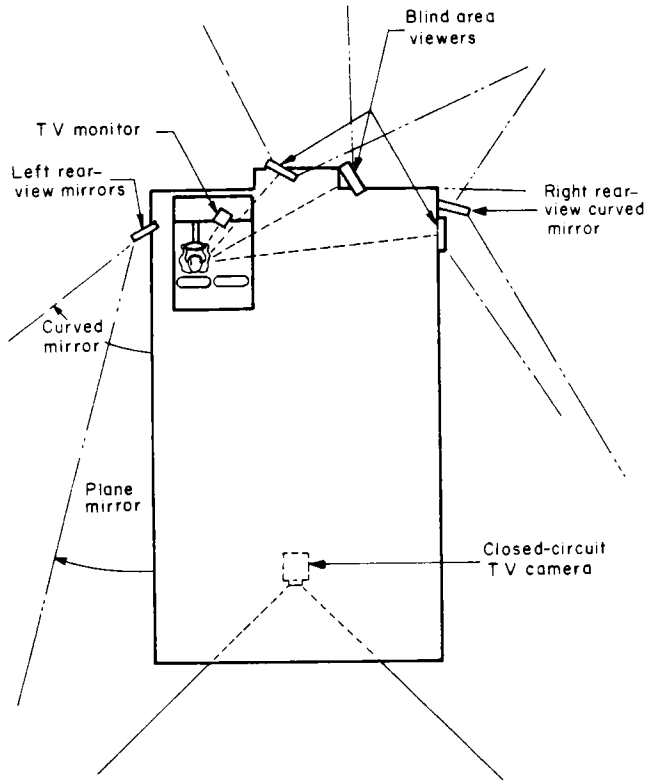

FIGURE 6. - Components of the improved visibility system for large haulage vehicles.

SECOND-GENERATION, LOW-PROFILE DESIGN

The blind area viewers were the most viable component of the improved visibility system, so further work was initiated to refine the hardware's design. Only two major modifications seemed to be needed. The first was to eliminate the upward-looking portion of the fresnel lens. It was originally thought that an "all around" (i.e., fisheye) picture through the viewer would help orient the driver, but experiments showed that eliminating the top 3 in (i.e., the upward-angled portion) of the lens did not impair the vision. Instead, this reduced the size of the viewer and reduced the potential problem of sun glare in the early mornings and evenings.

The second design modification was to add a hood on the rear of the lens to reduce backlighting (figs. 11-12). The redesigned viewer was then demonstrated at the contractor's facilities in San Ramon, Calif. Figure 13 shows a mockup of the front of a large haulage truck--note the position of the man with the hat standing in front of the truck mockup. Figure 14 shows the man as seen through the second-generation, low-profile blind area viewer.

Besides the redesigning of the viewer to the low profile, additional in-mine testing was needed so the industry could more fully understand the many applications of this unique device. To this end, an evaluation program was extended to various types of equipment in surface mines, stone quarries, coalpits, and uranium mines. Table 2 summarizes this work.

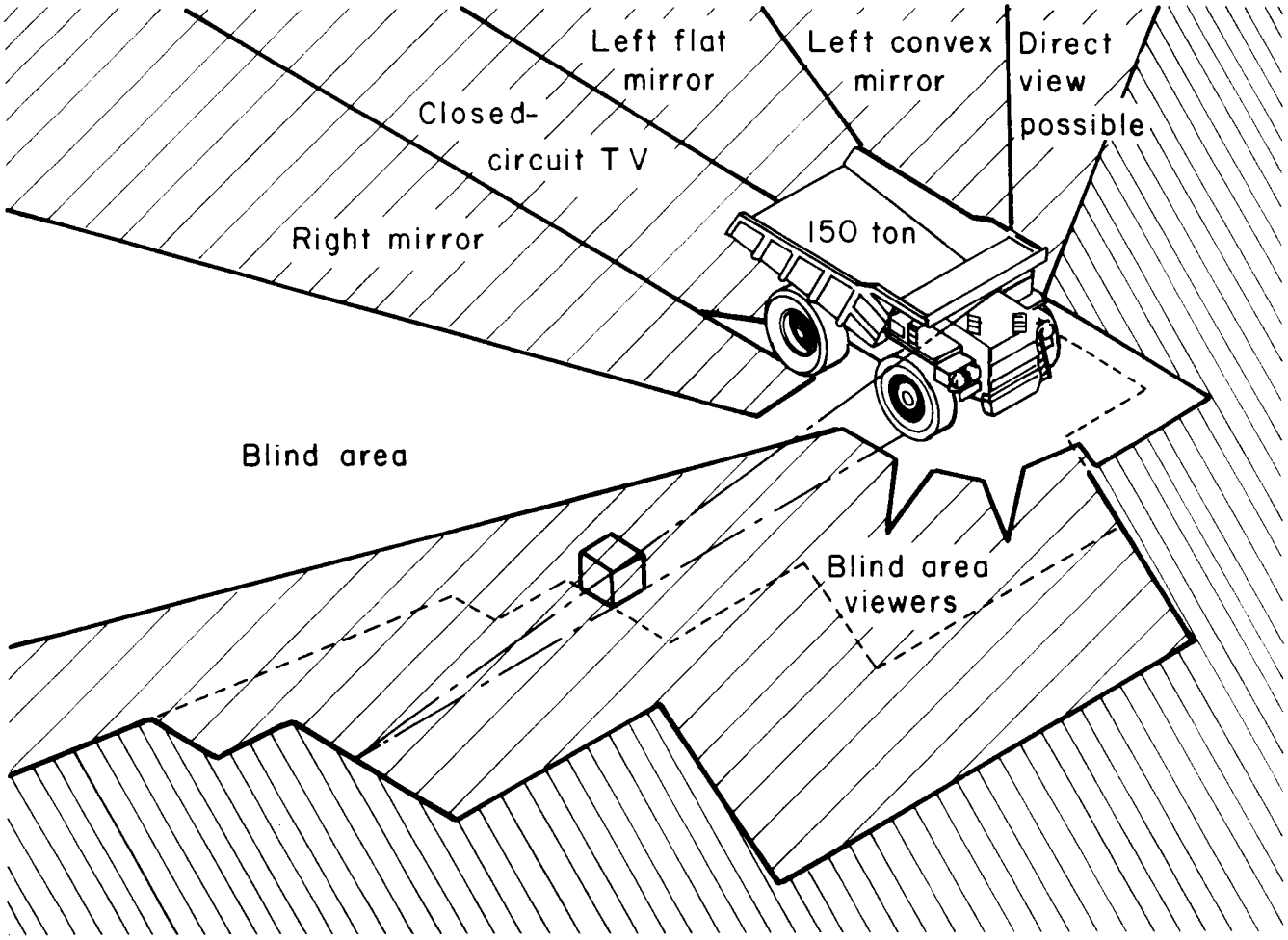

FIGURE 7. - Increased driver field-of-view with the improved system for large haulage trucks.

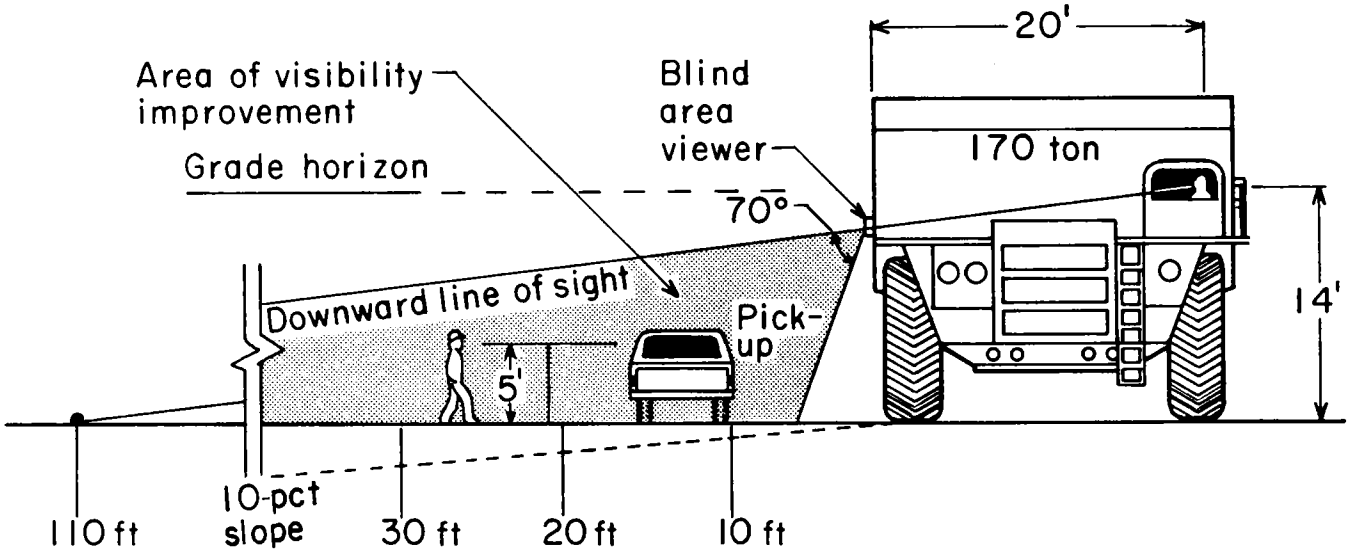

FIGURE 8. - Improved right-side visibility with the downward-looking blind area viewer.

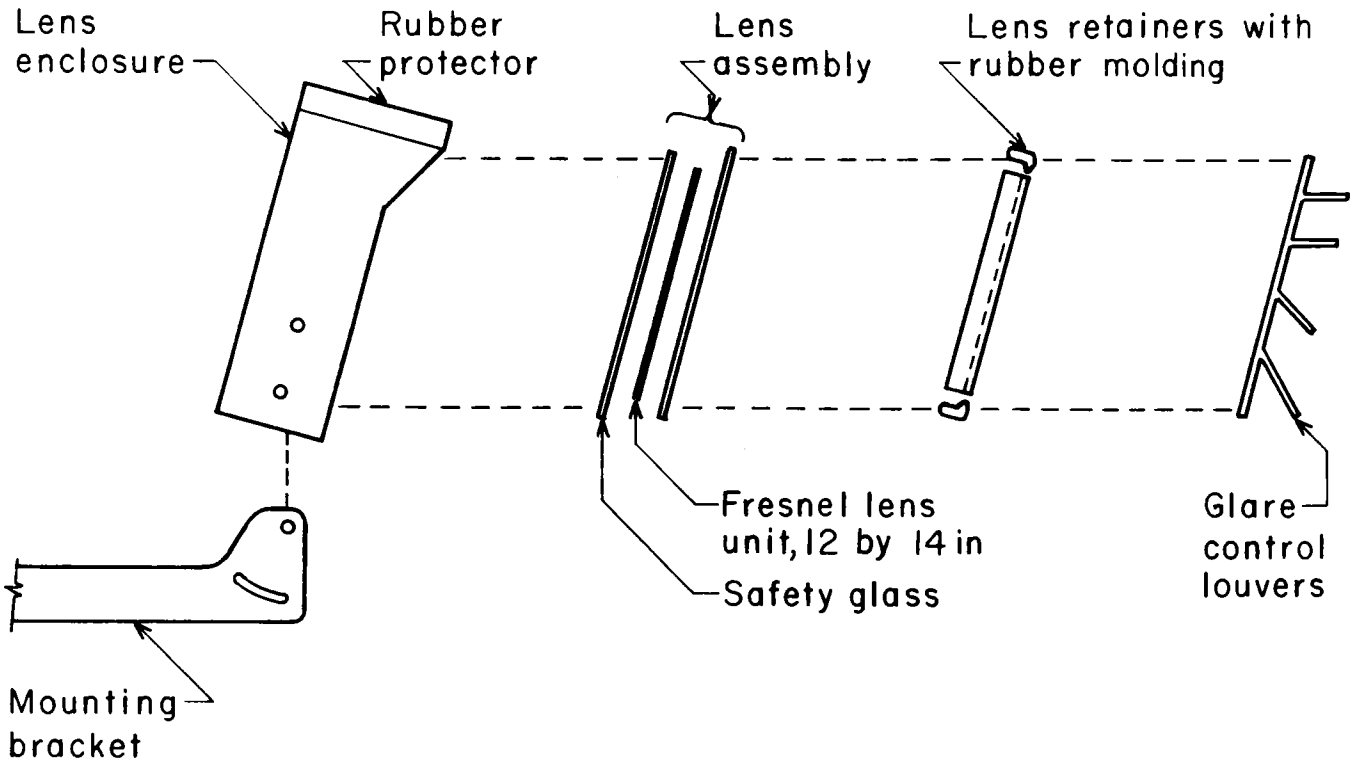

FIGURE 9. - Components of the first-generation fresnel lens blind area viewer.

FIGURE 10. - In-mine, on-vehicle test of first-generation prototype hardware (blind area viewers are on radiator deck).

TABLE 2. - In-mine testing of the second-generation, low-profile blind area viewers

Site	Equipment	Mine type	Hardware tested and comments
Eagel Mountain Mine, Kaiser Steel Corp., Eagle Mountain, Calif.	100- and 170-ton haulage trucks.	Iron.....	First 3 viewers, then 1 far-right viewer, plus improved mirrors.
Erie Mine, Pickands Mather & Co., Hoyt Lakes, Minn.	3 100-ton haulage trucks..	Taconite.	First 3 viewers, then 1 right-front viewer, plus improved rearview mirror.
Belle Ayr Mine, AMAX Coal Co., Gillette, Wyo.	120-ton haulage truck.....	Coal.....	Viewers. All 3 viewers were used in the operation, as blowing dirt and snow often limited visibility.
Minorca Mine, Inland Steel Co., Virginia, Minn.	120-ton haulage truck.....	Taconite.	1 right-front viewer, plus improved right- and left-hand mirrors.
Helena Quarry, Vulcan Materials Corp., Birmingham, Ala.	50-ton truck and 2 12-yd loaders.	Limestone quarry.	1 far-right viewer on truck, as well as viewers on back of 2 loaders that worked in the plant area for stockpile loadout. Successful.
Cyprus Pima Mine, Cyprus Mining Co., Tucson, Ariz.	170-ton haulage truck.....	Copper...	First 3 viewers, then 1 right-front viewer, plus improved mirrors.
Bear Creek Mine, Kennecott Co., Casper, Wyo.	120-ton haulage truck, 12-yd front-end loader, and 35-ton haulage truck.	Uranium..	1 viewer on far-right side of each truck and on rear of loader.
Pinto Valley Mine, Cities Service Co., Miami, Ariz.	170-ton haulage truck.....	Copper...	1 viewer on far right. Successful.
Coteau Mine, North American Coal Corp., Beulah, N. Dak.	Large water wagon.....	Lignite..	1 viewer, plus improved mirrors. Successful.
Texas Quarry, Flintkote Stone, Hunt Valley, Md.	2 120-ton trucks and 12-yd loader.	Coal.....	Viewers and mirrors. Successful. 2 blind area viewers were destroyed and the mine wanted replacement units immediately.
Glenrock Mine, Glenrock Coal Co., Glenrock, Wyo.	120-ton haulage truck.....	Coal.....	2 viewers. Successful.
National Steel Mine, Hanna Mining Co., Keewatin, Minn.	100-ton haulage truck.....	Taconite.	1 right-front viewer. Flood-lighting was tried successfully into the right-front blind area of the test truck.
Brownies Creek Mine, Harbert Construction Co., Pineville, Ky.	2 85-ton haulage trucks...	Coal.....	1 viewer on far-right side. Successful.
Highland Mine, Exxon Minerals Co., Casper, Wyo.	100-ton haulage trucks....	Uranium..	Viewers and mirrors. Drivers did not like viewers, as they had to clean the glass too many times; they did like mirrors.
Indianhead Mine, North American Coal Corp., Beulah, N. Dak.	120-ton haulage truck and loading shovel.	Lignite..	Viewers on truck and 1 mirror on shovel. Successful.
Jackson County Mine, Jackson County Iron Co., Inland Steel Corp., Black River Falls, Wis.	85-ton haulage trucks.....	Iron.....	Viewers. The first viewers were damaged by vehicle vibration; replacement units (properly installed) are now properly operating.
Mauricetown Quarry, Jessie Morie Co., Mauricetown, N.J.	2 6-yd loaders.....	Crushed stone.	Viewers. Working well on back of small loaders.
Morenci Mine, Phelps Dodge Corp., Morenci, Ariz.	2 100-ton haulage trucks..	Copper...	Viewers and mirrors. Drivers like improved mirrors, but cleaning viewers is a problem.

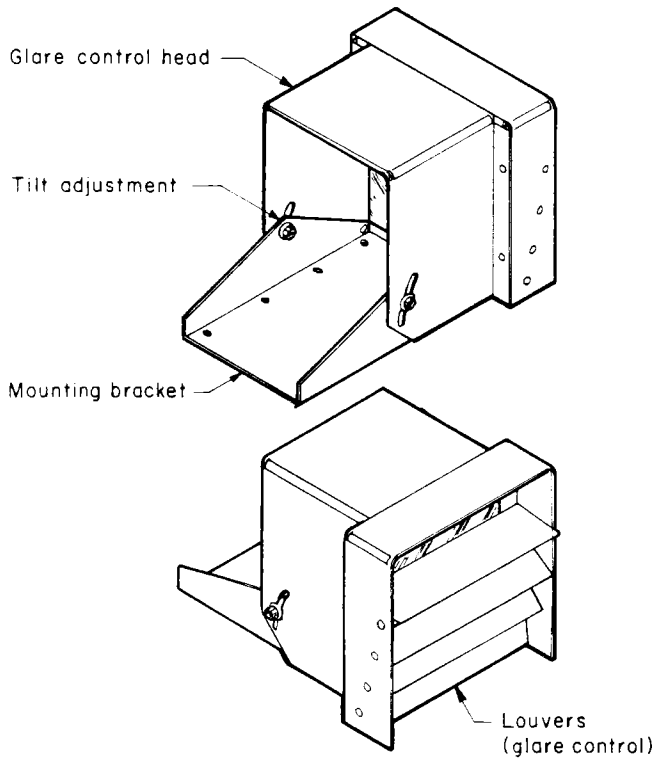

FIGURE 11. - Design of second-generation blind area viewer.

Figures 15 and 16 show the second-generation hardware at the Eagle Mountain Mine in 1978. Three viewers were tried on the 170-ton truck to get the maximum field-of-view for the driver. After a few months of testing, comments from drivers led to a change in the layout and just the far right-front viewer was used instead of all three. This viewer covered the most dangerous blind area and did not distract the driver's eyes as did the forward-looking viewers during truck movement. In fact, long-term use of this single viewer proved to be the most acceptable, because drivers naturally turn their heads to that side when turning right and would look into the viewer. The arrow in figure 16 shows the optimum mounting location.

Long-term testing of the low-profile hardware was also conducted on large front-end loaders (FEL). Figure 17 shows such an installation at the WIDCO coal mine in Centralia, Wash. Figure 18 gives the driver's view through the viewer.

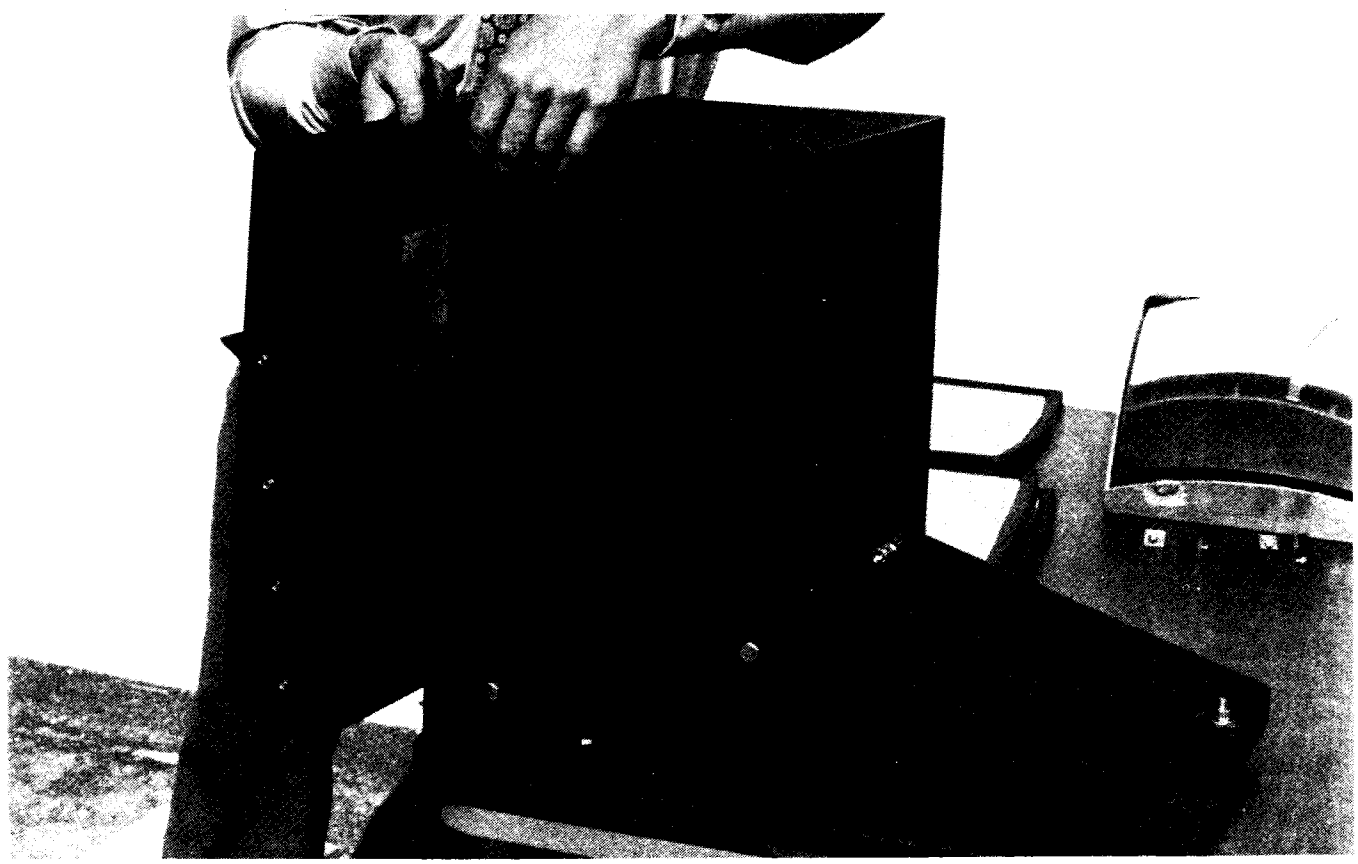

FIGURE 12. - Second-generation blind area viewer.

FIGURE 13. - Mockup testing of the second-generation blind area viewer.

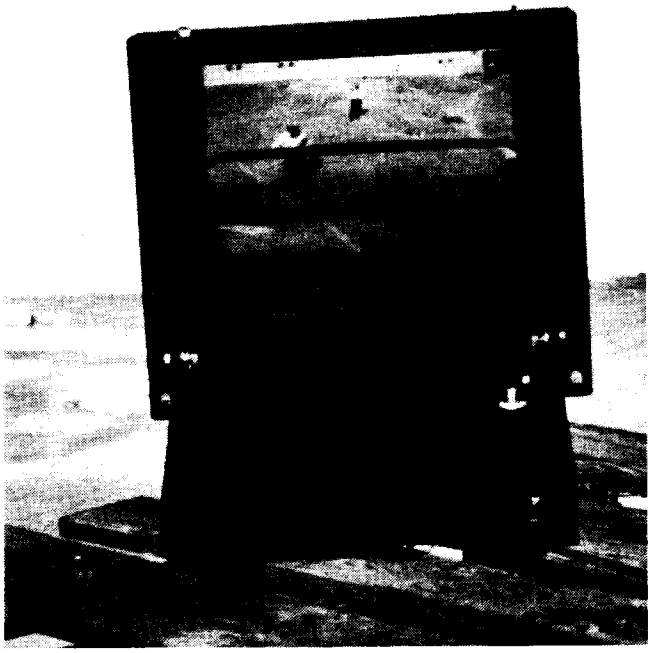

FIGURE 14. - View through the second-generation blind area viewer during the mockup testing.

During in-pit loading the drivers did not use the viewer, but once they brought their loaders into the plant area, the ability to see the rear blind area was greatly appreciated. The mine has had a number of near misses because of the heavy foot traffic and congestion in the plant and maintenance shop areas.

RELATED WORK ON COLLISION PROTECTION OF MINE EQUIPMENT

The blind area viewer has been gaining wide acceptance by the mining industry, but it is only part of the solution to the problem of collision protection in surface mines. The viewer is simple and relatively maintenance free (it needs occasional cleaning as does any vehicle's mirror), and it is inexpensive, thus cost effective. Current Bureau work is now concentrating on answering two related questions: (1) What motivates a driver to look in the viewer so he/she can take action to avoid a potential accident, and

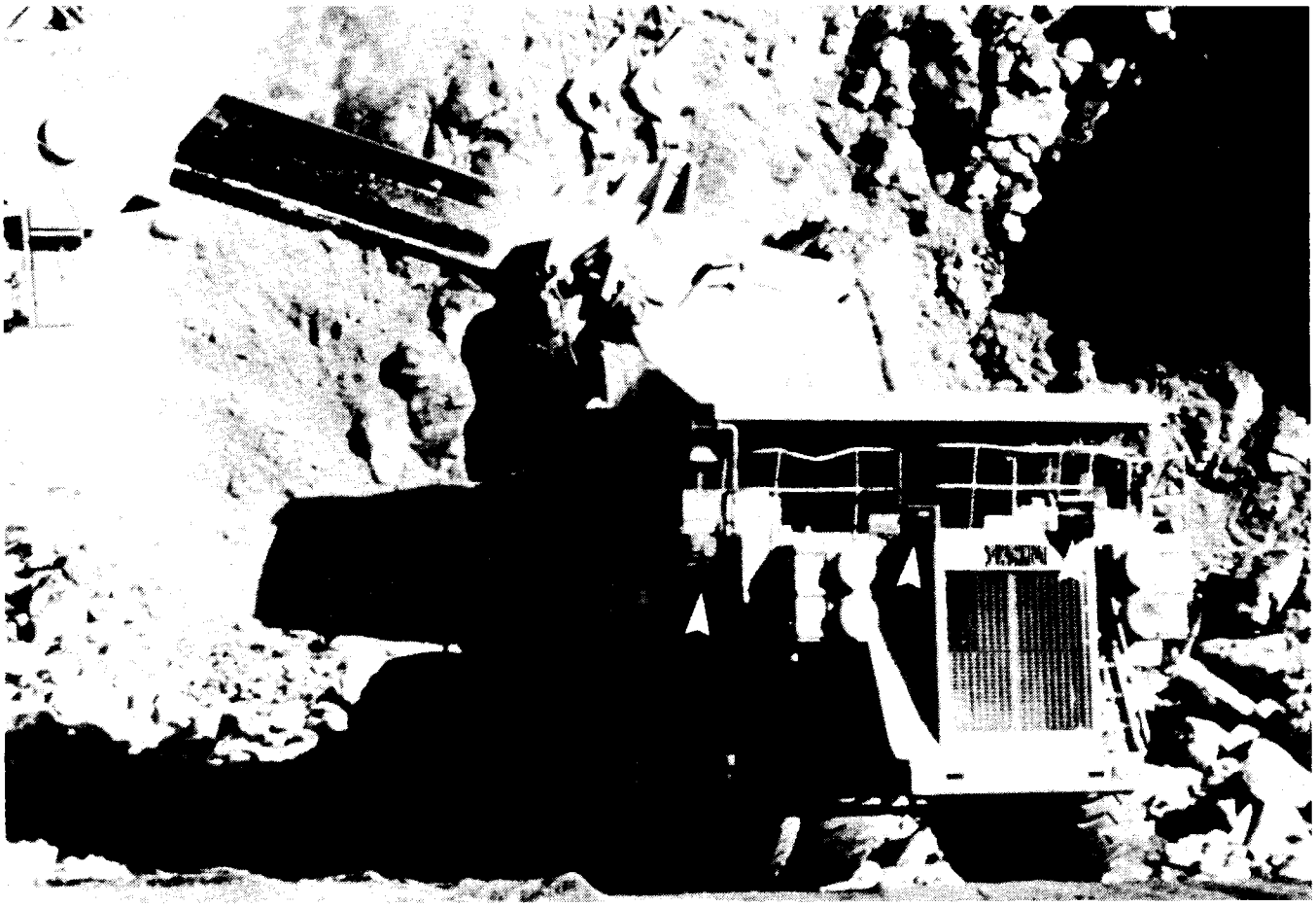

FIGURE 15. - Initial in-mine testing of second-generation blind area viewers (indicated by arrows) on a 170-ton-capacity truck.

(2) what might prevent the close-in, backing-up collision.

The improved right- and left-hand mirrors recently developed by the Bureau allow much better rear vision, but small vehicles still get into a truck's rear blind area. The improved left-hand mirror is a quick-change, 20- by 10-in flat mirror, and the right-hand mirror is a novel 30-in-radius, rectangular-convex device. Both mirrors, plus the right-front mounted viewer, are recommended for use on trucks today and are commercially available. Electronic devices could be used to warn drivers of potential collisions, but while many radar, infrared, or sonic devices are small and inexpensive enough for on-vehicle use, most are not rugged enough for the harsh mining environment. An electronic system for complete collision protection is still a few years away, but close-in sonic detectors, now being modified by the Bureau (fig. 19), seem to have great potential. This is especially true when the detector is combined with the blind area viewer and a voice warning system in the cab, to warn the driver that something is either in or approaching the blind side. Laboratory work on such hardware is now being conducted by the Bureau.

A direct view of the rear ground area and dump point or beam is possible via CCTV hardware. The Bureau is currently evaluating this alternative (fig. 20), but such systems are relatively expensive and require extensive maintenance. Mines with very hazardous dumping conditions (such as a high waste dump over the side of a mountain) are cooperating with the Bureau to perfect CCTV-lighting technology. As a result of this work, the price

FIGURE 16. - On-truck testing of three viewers. Optimum location of a single viewer on a large truck is at the right front, as indicated by arrow.

of a reliable system has dropped from about $60,000 to about $5,000 per vehicle. Future work with ruggedized CCTV applications will use newly developed hardware in the $500 to $1,000 range. Other longer term work involves the design and in-mine testing of automated backup warning devices and driver alertness monitors, plus the creation and evaluation of novel haulage truck designs that eliminate many of the inherent dangers in today's equipment.

COMMERCIALIZATION AND COST-EFFECTIVENESS ANALYSIS

Since May 1981, the Tracor MBA Corp. of San Ramon, Calif., has been marketing both the low-profile blind area viewer and the improved mirrors. About 1,000 units have been sold, many to foreign countries. The pricing of the hardware varies according to the quantity ordered.

Assuming one right-front-mounted blind area viewer on medium-sized trucks (i.e., up to 150-ton capacity) and one far-right-side plus a right-front viewer for vehicles in the 170-ton-plus class, a payback period of about 1 month is

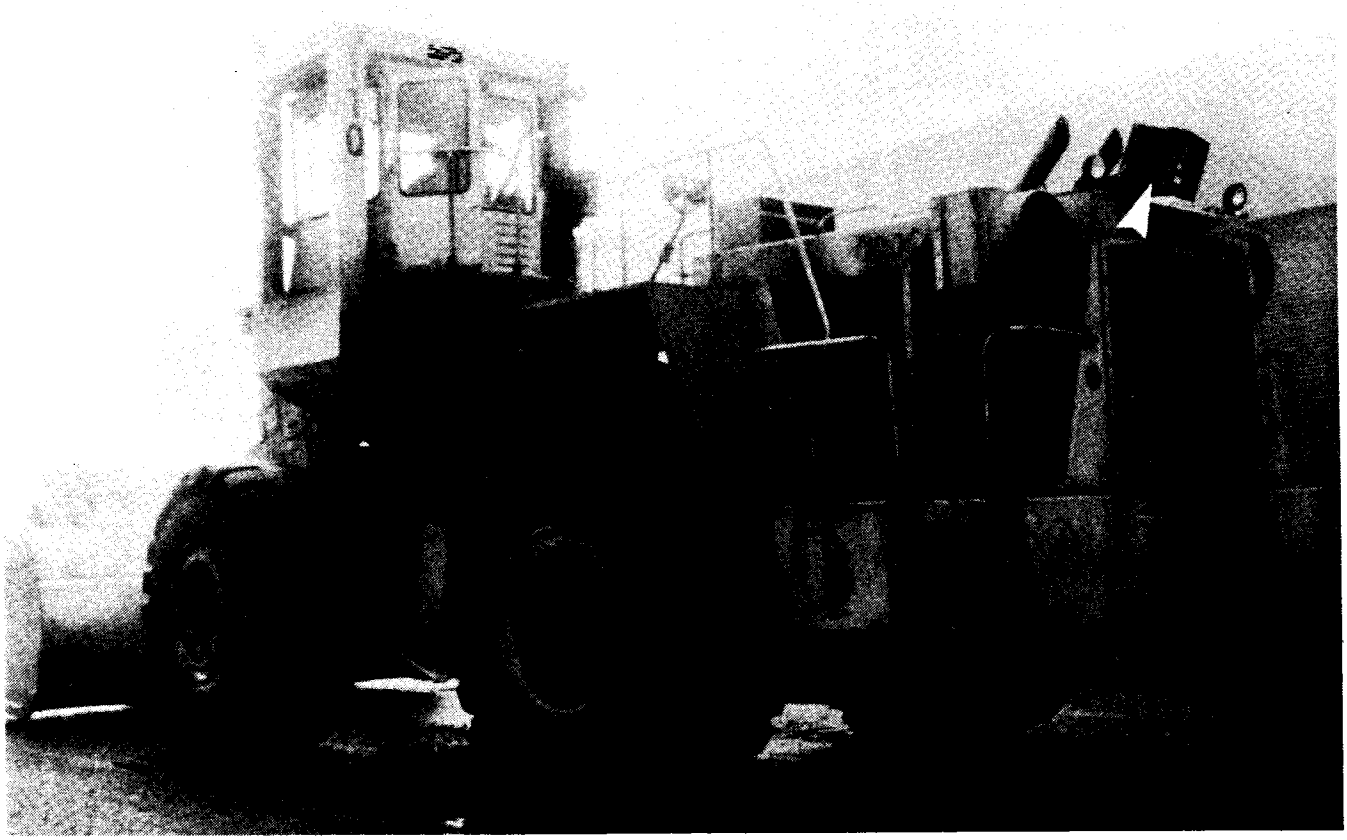

FIGURE 17. - Testing the viewer on the back of a large front-end loader.

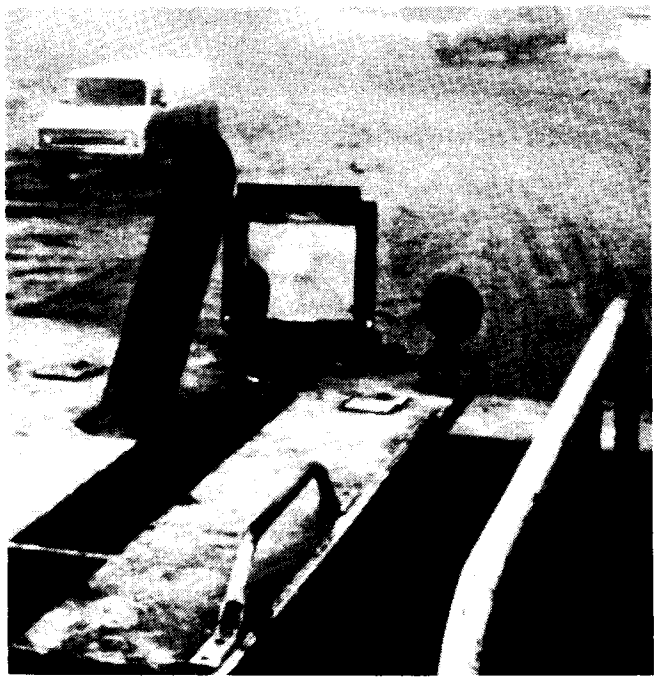

FIGURE 18. - View of a car through the blind area viewer on a large front-end loader.

obtained. This calculation assumes a cost of $500 per viewer and considers such factors as an ownership and operating cost of $175 to $200 per hour for a 170-ton truck and only a 1-pct improvement in haulage truck productivity because of better driver vision (a realistic figure based on the Bureau's in-mine test program). One percent of $200 is $2 per hour; thus the viewer cost installed--$1,000--is returned in 20 working days.

Tracor MBA will send marketing information to any interested party. A number of mines are now ordering new vehicles with viewers already installed; thus, retrofit action is not needed. A new company, Optical Science Group of Petaluma, Calif., initiated a marketing effort in late 1982 to sell a smaller version of a fresnel lens viewer called Safe-T-Site, which costs substantially less than $500 per unit.

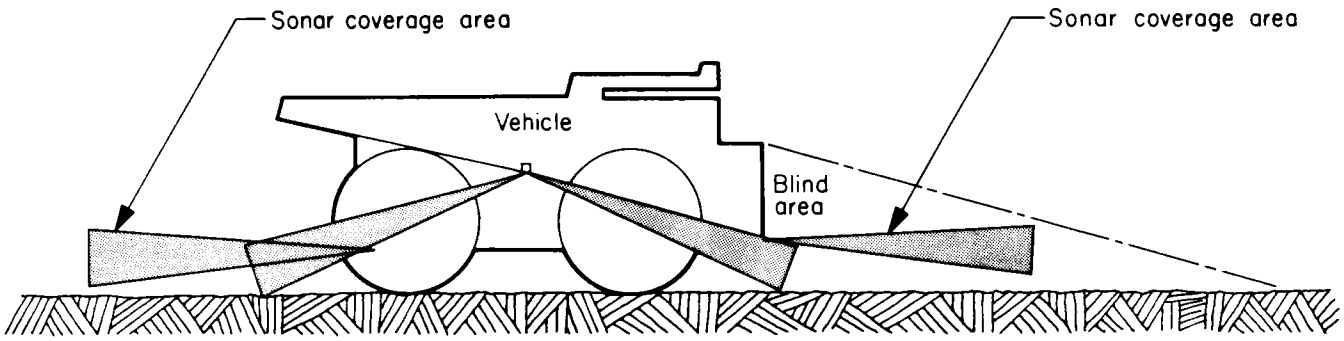

FIGURE 19. - Close-in collision warning device.

FIGURE 20. - Prototype CCTV rear-viewing system in an Arizona copper mine.

SUMMARY

Fresnel lens blind area viewers improve not only mine safety but also equipment productivity. This novel device was developed and in-mine-tested by the Bureau through complementary in-house and contract R&D. It is commercially available and has a payback period of about 1 month. Blind area viewers are applicable not only to haulage trucks, but also to large front-end loaders, downhole drills, draglines, power shovels, etc. During in-mine testing of prototype viewers, at mines where the viewers were installed properly and drivers were told what to expect, there was a positive response from the drivers and an estimated 1- to 5-pct improvement in maneuverability.

INT.-BU.OF MINES,PGH.,PA. 27130