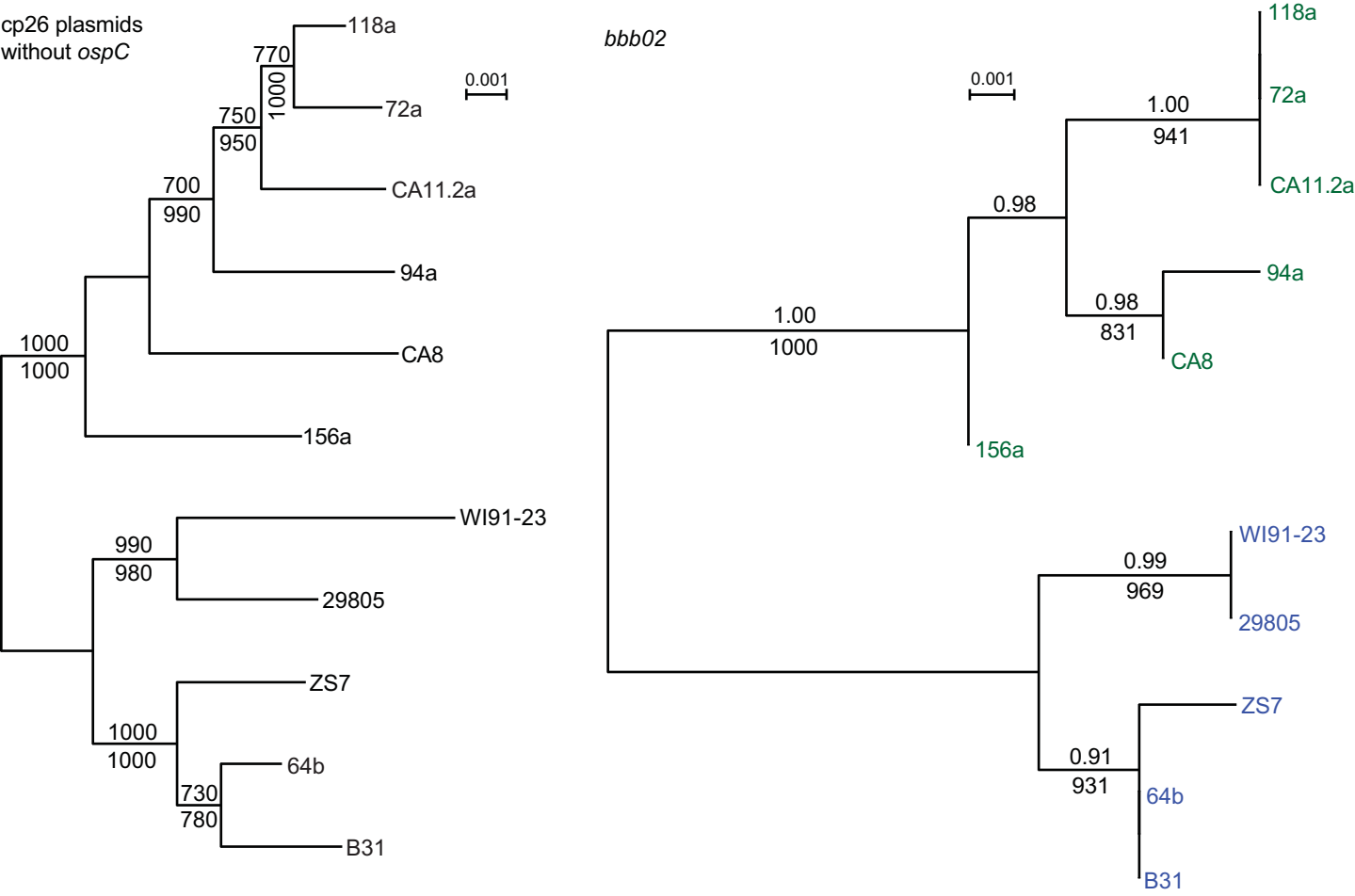
cp26 plasmids
without ospC
118a
72a
CA11.2a
94a
CA8
156a
WI91-23
29805
ZS7
64b
B31
770
1000
750
950
700
990
1000
1000
990
980
1000
1000
730
780
0.001
bbb02
0.001
118a
72a
CA11.2a
94a
CA8
156a
WI91-23
29805
ZS7
64b
B31
1.00
941
0.98
0.98
831
1.00
1000
0.99
969
0.91
931