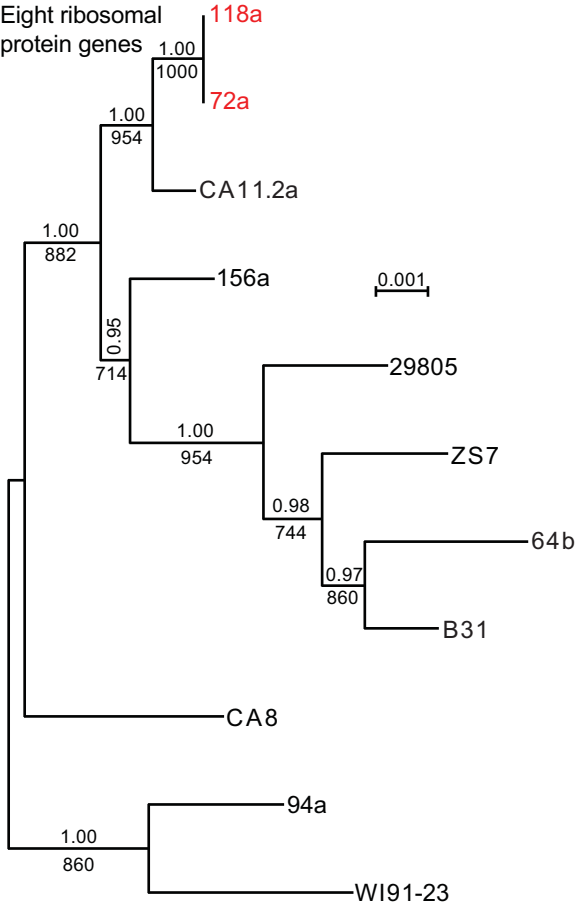
Eight ribosomal protein genes
118a
72a
CA11.2a
156a
29805
ZS7
64b
B31
CA8
94a
WI91-23
1.00
1000
1.00
954
1.00
882
0.95
714
1.00
954
0.98
744
0.97
860
1.00
860
0.001

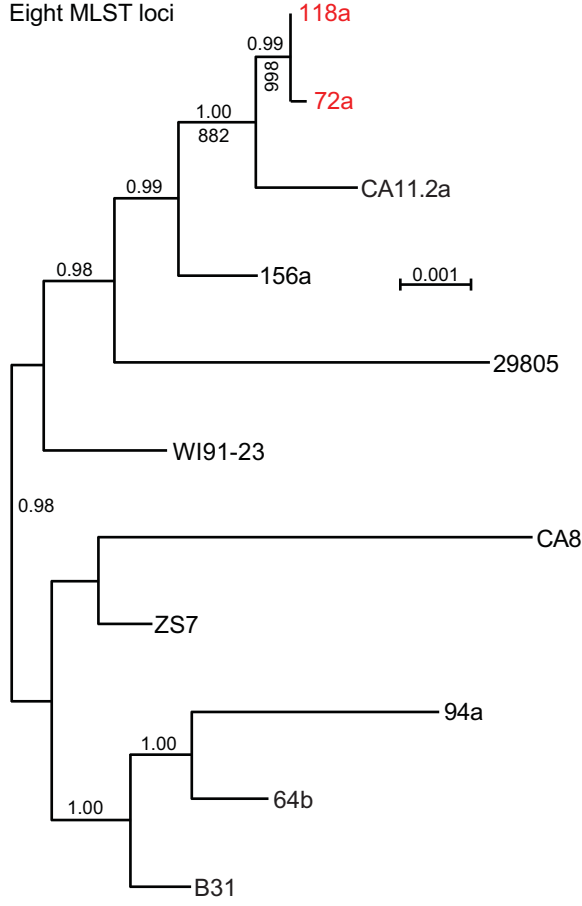
Eight MLST loci
118a
72a
CA11.2a
156a
29805
WI91-23
CA8
ZS7
94a
64b
B31
0.99
998
1.00
882
0.99
0.98
0.98
1.00
1.00
0.001