PB223935

Report of Investigations 7771

Large-Scale Continuous Attrition Grinding of Coarse Kaolin

By E. G. Davis, E. W. Collins, and I. L. Feld
Tuscaloosa Metallurgy Research Laboratory, Tuscaloosa, Ala.

UNITED STATES DEPARTMENT OF THE INTERIOR
Rogers C. B. Morton, Secretary

BUREAU OF MINES
Elburt F. Osborn, Director

REPRODUCED BY:
U.S. Department of Commerce
National Technical Information Service
Springfield, Virginia 22161
NTIS

The work upon which this report is based was done under a cooperative agreement between the Bureau of Mines, U.S. Department of the Interior, and the University of Alabama.

This publication has been cataloged as follows:

Davis, Edward G

Large-scale continuous attrition grinding of coarse kaolin, by E. G. Davis, E. W. Collins, and I. L. Feld. [Washington] U.S. Bureau of Mines [1973]

22 p. illus., tables. (U.S. Bureau of Mines. Report of investigations 7771)

Based on work done in cooperation with the University of Alabama.

Includes bibliography.

1. Kaolin. 2. Grinding and polishing. 3. Grinding machines. I. U.S. Bureau of Mines. II. Collins, Edwin W., jt. auth. III. Feld, Ignatz L., jt. auth. IV. Alabama. University. V. Title. (Series)

TN23.U7 no. 7771 622.06173

U.S. Dept. of the Int. Library

BIBLIOGRAPHIC DATA SHEET	1. Report No. BuMines RI 7771	2.	3. Recipient's Accession No. PB-223935
4. Title and Subtitle Large-Scale Continuous Attrition Grinding of Coarse Kaolin			5. Report Date August 1973
			6. Performing Organization Code
7. Author(s) E. G. Davis, E. W. Collins, and I. L. Feld			8. Performing Organization Rept. No.
9. Performing Organization Name and Address Tuscaloosa Metallurgy Research Laboratory, Bureau of Mines, USDI, P.O. Box L, University, AL 35486			10. Project/Task/Work Unit No.
			11. Contract/Grant No.
12. Sponsoring Agency Name and Address Office of Assistant Director--Metallurgy, Bureau of Mines, U.S. Department of the Interior, Washington, DC 20240			13. Type of Report & Period Covered Research, 1967-1969
			14. Sponsoring Agency Code

15. Supplementary Notes The work upon which this report is based was done under a cooperative agreement between the Bureau of Mines and the University of Alabama.

16. Abstracts Large-scale ultrafine grinding tests were made of coarse kaolin using the Bureau of Mines developed grinding process. A 20-inch diameter attrition grinder was used in continuous open- and closed-circuit systems. The studies included single- and multiple-stage open circuit grinding, and also continuous grinding in closed circuit with a 6-inch diameter centrifuge.

Using a modified two-stage closed-circuit system, a ground product containing 88.5 percent minus 2-micron-esd material was produced from coarse clay that contained only 9.0 percent minus 2-micron-esd material. The electrical energy consumed during grinding was 327 kilowatt hours per ton of minus 2-micron-esd material produced.

17. Key Words and Document Analysis. 17a. Descriptors

Kaolin
Nonmetalliferous minerals
Silicate minerals
Comminution
Attrition mills
Ultrafine
Beneficiation

17b. Identifiers/Open-Ended Terms

Ultrafine ginding
Attrition grinding
Paper coating clays

17c. COSATI Field/Group 11B, 14B

18. Distribution Statement	19. Security Class (This Report)	21. No. of Pages
Release unlimited by NTIS.	UNCLASSIFIED	28

CONTENTS

	Page
Abstract	1
Introduction	1
Acknowledgment	2
Description of sample	3
Experimental work	3
Attrition grinder	3
Batch grinding tests	4
Continuous open-circuit studies	9
Single-stage grinding	9
Modified single-stage grinding	10
Multiple-stage grinding	11
Continuous closed-circuit grinding	13
Test procedure	13
Centrifuge classification tests	14
Closed-circuit grinding	16
Conclusions	21
References	22

ILLUSTRATIONS

1. 20-inch-diameter attrition grinder 4
2. Grinding components in the 20-inch-diameter attrition grinder 5
3. Schematic flowsheet of continuous open-circuit grinding 9
4. Schematic diagram of modified single-stage grinding 11
5. Schematic flowsheet of continuous closed-circuit grinding 13
6. Centrifugal classification of kaolin showing minus-2-micrometer esd in the feed versus minus-2-micrometer esd in product at various centrifuge speeds 17
7. Flowsheet of modified two-stage closed-circuit grinding system 20

TABLES

1. Sizing analysis of clay 3
2. Batch attrition grinding of coarse kaolin clay to test rotor openings and other operating variables 7
3. Batch attrition grinding of coarse kaolin to test stator bar length and other operating variables 8
4. Results of batch tests simulating continuous open-circuit grinding of coarse kaolin in the 20-inch-diameter grinder 8
5. Influence of feed rate on particle size reduction and power consumed during single-stage grinding 10
6. Results of single-stage open-circuit grinding tests made with recirculating loads 11
7. Results of multiple-stage open-circuit grinding tests made with different clay feed rates 12
8. Results of classification tests made in the 6-inch continuous centrifuge 15

TABLES--Continued

Page

9. Six-inch diameter centrifuge tests of kaolin showing the effect of inlet port position, feed particle size, and centrifuge speed on the overflow product..... 16
10. Results of closed-circuit grinding tests..... 18
11. Influence of centrifuge feed pulp density in closed-circuit grinding on grade and recovery of product..... 18
12. Results of modified two-stage open-circuit grinding test on kaolin raw feed and centrifuge recycle material..... 19
13. Results of modified, continuous two-stage closed-circuit grinding... 20
14. Comparison of results from various grinding tests..... 21

LARGE-SCALE CONTINUOUS ATTRITION GRINDING OF COARSE KAOLIN

by

E. G. Davis,[1] E. W. Collins,[2] and I. L. Feld[3]

ABSTRACT

Large-scale ultrafine grinding tests of a coarse kaolin were made using the Bureau of Mines developed attrition grinding process in continuous open- and closed-circuit systems. A 20-inch diameter attrition grinder, designed and constructed at the Tuscaloosa Laboratory, was used.

Studies included single- and multiple-stage open-circuit grinding, and also continuous grinding tests in closed-circuit with a 6-inch-diameter solid bowl centrifuge. Clay feed, containing 9.0 percent minus-2-micrometer esd, was used at rates up to 840 pounds per hour.

Multistage grinding tests gave better results than single-stage treatment when equivalent clay feed rates were used.

Closed-circuit grinding tests yielded ground products containing slightly more minus-2-micrometer-esd clay than the open-circuit grinding when using the same clay feed. Energy consumption was lower in closed-circuit grinding than in batch or open-circuit grinding.

A modified two-stage closed-circuit grinding system gave the best grade of product and amount of minus-2-micrometer-esd clay produced per pound of clay feed. The ground product from this test contained 88.5 percent minus-2-micrometer-esd material and electrical energy consumption was 327 kilowatt-hours per ton of minus-2-micrometer-esd material produced.

INTRODUCTION

Fine grinding research by the Federal Bureau of Mines has resulted in the development of an attrition grinding process (3)[4] that has been successfully used for ultrafine grinding of various solid materials (7). The process was

[1] Metallurgist.
[2] Minerals engineer (now deceased).
[3] Supervisory metallurgist.
[4] Underlined numbers in parentheses refer to the list of references at the end of this report.

initially developed and patented (2) by the Bureau at the Tuscaloosa Metallurgy Research Laboratory to grind coarse paper-filler kaolins to finer, paper-coating-grade clay. The fundamental objective of the research was to conserve the Nation's reserve of paper-coating clay by developing and demonstrating a satisfactory method for converting coarse, low-value, filler-grade kaolins into finer, high-value, delaminated kaolins suitable for paper-coating use.

The successful use of the attrition grinding process for batch and continuous grinding of coarse paper clays in laboratory-size 5-inch- and 10-inch-diameter grinders has been reported by the Bureau (4-5). Investigations of operating conditions and their influence in the attrition grinding process also have been described (6).

As a result of the Bureau's reports and demonstrated applications of the attrition grinding process for the comminution of coarse kaolin, the process has been adopted for use in the paper clay industry. The commercial utilization of the Bureau's process has had a significant influence on the increased production of ground and/or delaminated paper-coating clays. As a result of this increased production, changes have been made by industry in the specifications of commercially produced coating products.

When the Bureau's fine grinding research was begun in 1960 the minimum grade for commercial or paper-coating clays was about 70 percent minus-2-micrometer esd (equivalent spherical diameter). At that time, grinding coarse clay to 70 percent minus-2-micrometer esd was the objective of the research. However, with advances in the technology of the paper-clay industry, domestically produced paper-coating clays are presently divided into two categories: (1) Naturally occurring paper-coating sizes which are removed from the raw clay by classification during processing and (2) delaminated clays produced from coarse kaolins by attrition grinding or other delaminating techniques. The minimum grade of the naturally occurring paper-coating clays has consistently remained at about 70 percent minus-2-micrometer esd. Whereas, the minimum desired commercial grade of delaminated paper-coating clays is about 80 percent minus-2-micrometer esd.

This report describes the Bureau's continued investigation of the attrition grinding process, and its successful application on a larger scale using a 20-inch-diameter grinder designed, constructed, and operated at the Tuscaloosa Laboratory. The results of batch, continuous open-, and closed-circuit grinding of coarse kaolin in the 20-inch grinder to produce a finer kaolin suitable for use as a paper-coating clay are presented.

ACKNOWLEDGMENT

The authors express their appreciation to the Georgia Kaolin Company for supplying the clays used in the investigation.

DESCRIPTION OF SAMPLE

The kaolin, a commercial filler-grade product, was obtained from a Southeastern U.S. clay company that produces paper-filler clays, paper-coating clays and other kaolin products. Particle size distribution and chemical composition of the clay differed only slightly from the clays used in previous investigations (2-5). Minor differences in composition between clays are due to variation between production lots from the kaolin company. Table 1 shows the size analysis of the clay used in most of the tests in this investigation. This size analysis and all subsequent size determinations were made by a sedimentation method using a modified application of an ASTM method (1).

TABLE 1. - Sizing analysis of clay

Particle diameter, µm, esd	Wt-pct	Cumulative weight, pct[1]
Minus 44 plus 37....	4.5	100.0
Minus 37 plus 30....	14.2	95.5
Minus 30 plus 20....	20.3	81.3
Minus 20 plus 10....	28.2	61.0
Minus 10 plus 5.....	15.7	32.8
Minus 5 plus 2.....	8.1	17.1
Minus 2.....	9.0	9.0
Composite.....	100.0	-

[1] Cumulative percent finer than the larger particle diameter indicated.

Petrographic and X-ray examination of the sample revealed that the clay was principally kaolinite in the form of plates, which are aggregated as stacks or books. Impurities present in small quantities were muscovite, sericite, graphite, and rutile.

EXPERIMENTAL WORK

Attrition Grinder

The grinding tests were made in a 20-inch-diameter attrition grinder shown in figure 1. This grinder is a scaleup of the Bureau's 10-inch unit described in detail in an earlier report (4). Figure 2 is a drawing of the grinding components which consist of the rotor, stator, and cylindrical container. The container, A, is rubber-lined and consists of an upper and lower section. The upper section serves as a sedimentation area for separating the sand grinding medium and other coarse particles from the clay slurry during continuous grinding. The cagelike rotor C, built with vertical bars, rotates inside the cagelike stator B, which is also constructed of vertical bars. The rotor is coupled to a shaft which is turned by a motor. The feed enters the grinder through the central opening at the bottom of the container and overflows from the grinder through an overflow port in the upper section.

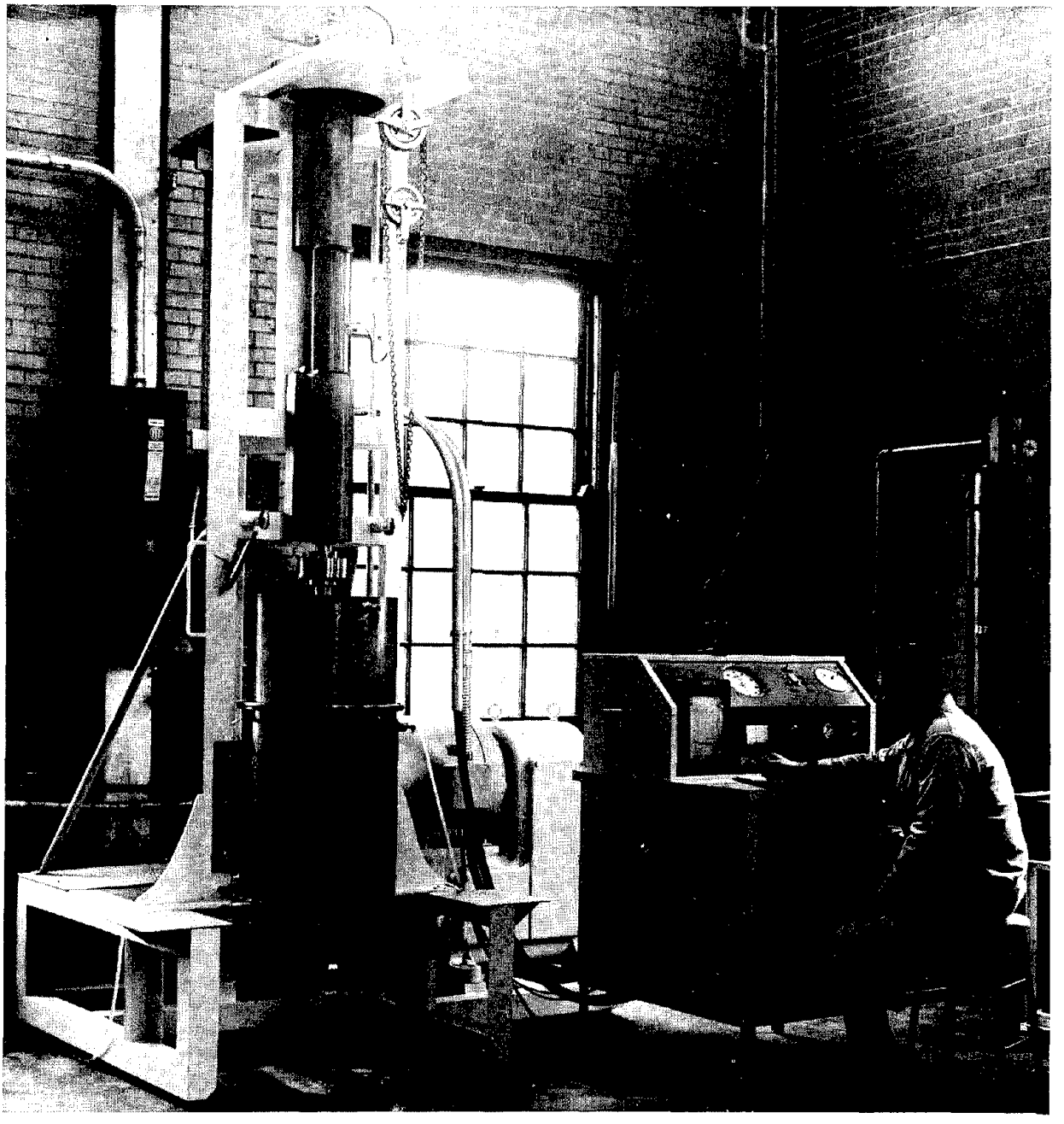

FIGURE 1. - 20-inch-diameter attrition grinder.

Batch Grinding Tests

Batch attrition grinding tests were initiated before continuous testing to ascertain the relation of various operating conditions to electrical energy consumption and particle-size reduction. In these tests, Ottawa sand of minus 14 plus 28 mesh was used as the grinding medium. Effective dispersion

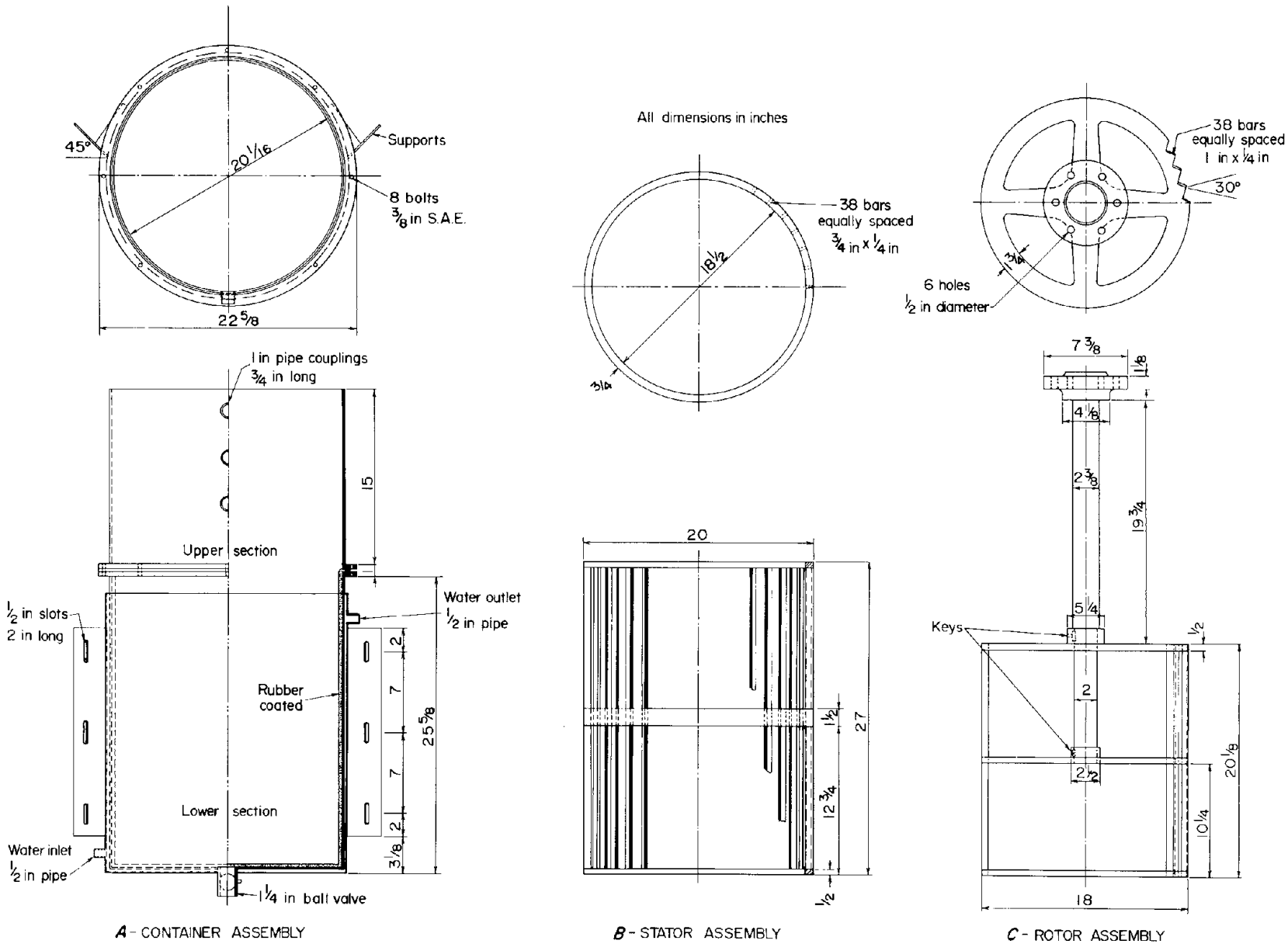

FIGURE 2. - Grinding components in the 20-inch-diameter attrition grinder.

of the pulp was obtained with 6 pounds of tetrasodium pyrophosphate per ton of dry clay feed.

The following is a simple description of the batch testing procedure. A dispersed clay slurry of the desired percent solids was prepared in a suitable container and while the grinder rotor was turning slowly, the mixture was pumped into the grinder. The correct amount of sand media was added, followed by adjustment to the desired rotor speed. After 30 minutes grinding time the clay slurry was drained, screened on 65 mesh to remove the sand, and sampled for size analysis. Operating conditions such as temperature, rotor speed (rpm), and electrical energy consumption were electronically monitored. Electronic monitoring provided a more accurate control and analysis of operating conditions than had been available in previous tests with the 5-inch- and 10-inch-diameter units.

The scaleup of the 10-inch unit to the 20-inch unit showed that some design modifications were necessary. These included (1) increased stator bar height, (2) use of a grid above the stator, and (3) closure of the four horizontal openings in the top rotor hub. Testing to develop these modifications was made concurrently with testing of the following operating variables: (1) Clay-water pulp density, (2) sand media to clay ratio, and (3) peripheral speed of the rotor.

A summary of the results obtained while investigating the influence of rotor openings and other operating variables is shown in table 2. The data showed that there was marked improvement in particle-size reduction of the clay when the grinder was operated with a covered rotor. For example, when grinding a feed containing 40 percent solids, with a sand to clay weight ratio of 2.5 to 1 and with a peripheral rotor speed of 1,400 fpm, a product containing 80.8 percent of minus-2-micrometer particles was obtained while using a covered rotor. Whereas a product containing only 60.2 percent minus-2-micrometer particles was obtained when grinding under similar conditions but with an open rotor. Electrical energy consumption was higher when using the covered rotor, but this was anticipated as necessary to obtain effective particle-size reduction. The results of the tests with the covered rotor compare favorably with those obtained when batch grinding the same clay in the 10-inch-diameter unit.

The data also indicated that the influence of operating conditions in the 20-inch unit were similar to those obtained from previous work with smaller diameter units. For example, as the sand to mineral weight ratio and peripheral rotor speed increased, the amount of particle-size reduction and electrical energy consumption also increased.

TABLE 2. - Batch attrition grinding of coarse kaolin to test rotor openings and other operating variables[1]

Rotor type	Peripheral rotor speed, fpm	Equivalent feed rate, lb/hr	Sand media to clay ratio, parts sand: one part clay	Feed, clay and water, pct solids	Ground clay, minus-2-μm esd, wt-pct	Electrical energy consumed, kW-hr/ton of feed
Covered	1,400	133	2.0	35	75.5	202
Do...	1,400	151	2.0	40	72.9	186
Do...	1,400	169	2.0	45	64.0	174
Do...	1,400	125	2.5	35	79.8	241
Do...	1,400	140	2.5	40	80.8	225
Do...	1,400	156	2.5	45	75.4	204
Open...	1,400	140	2.5	40	60.2	100
Covered	1,400	125	3.0	35	83.1	247
Do...	1,400	132	3.0	40	82.4	237
Do...	1,400	146	3.0	45	81.1	236
Open...	1,400	132	3.0	40	62.9	115
Covered	1,200	140	2.5	40	75.3	175
Do...	1,600	140	2.5	40	81.0	263
Open...	1,600	140	2.5	40	67.8	144
Covered	1,200	132	3.0	40	77.4	197
Do...	1,600	132	3.0	40	82.9	280
Open...	1,600	132	3.0	40	71.8	170

[1]A grid located above the stator was used in each test to reduce swirling of the charge.

A summary of the results obtained while investigating the influence of longer stator bars and other grinding variables is given in table 3. The stator constructed with the longer bars was made exactly as the original, except the bars were 5 inches longer. In table 3 all tests with shorter stator bars were made with a grid to reduce swirling of the charge. Tests with the longer bars were made without a grid. Comparison of data from grinding with the long and the short bars showed that there was very little difference in the size analysis of the finished products or the electrical consumption. Therefore, longer stator bars were adopted as an improved machine design modification to reduce swirling of the charge. In later continuous testing, the longer stator bars and the grid also were used for best control of the swirling action.

Other data given in table 3 show that the influence of grinding variables, sand to clay ratio, and peripheral rotor speed gave results similar to those obtained in table 2 and with other attrition grinding units.

Several additional batch tests were made in the 20-inch grinder to simulate continuous open-circuit grinding. These tests were made to determine the effect of increasing the clay-water charge volume on particle-size reduction and electrical energy consumption while maintaining a fixed sand load. The grinding time was adjusted to be equivalent to the feed rate used in the 30-minute batch tests. Results of the tests given in table 4 show that

particle-size reduction and electrical energy consumption were less than in previous batch tests because charge volumes were greater and much of the clay-water slurry was above the grinding zone.

TABLE 3. - Batch attrition grinding of coarse kaolin to test stator bar length and other operating variables

Stator bar type	Peripheral rotor speed, fpm	Equivalent feed rate, lb/hr	Sand media to clay ratio, parts sand: one part clay	Feed, clay and water, pct solids	Ground clay, minus-2-μm esd, wt-pct	Electrical energy consumed, kW-hr/ton of feed
Long...	1,400	133	2.0	35	77.6	192
Do...	1,400	125	2.5	35	79.3	235
Short[1].	1,400	125	2.5	35	79.8	241
Long...	1,400	151	2.0	40	74.6	178
Do...	1,400	140	2.5	40	80.8	220
Short..	1,400	140	2.5	40	80.8	225
Long...	1,400	169	2.0	45	72.9	167
Do...	1,400	156	2.5	45	79.1	205
Short..	1,400	156	2.5	45	75.4	204
Long...	1,000	140	2.5	40	55.7	132
Do...	1,000	132	3.0	40	58.8	144
Do...	1,200	140	2.5	40	75.9	198
Do...	1,200	132	3.0	40	79.7	210
Do...	1,600	140	2.5	40	82.3	252
Do...	1,600	132	3.0	40	86.2	285

[1]A grid was used in all tests made with the short stator bars.

TABLE 4. - Results of batch tests simulating continuous open-circuit grinding of coarse kaolin in the 20-inch-diameter grinder[1]

Charge		Peripheral rotor speed, fpm	Sand media to clay ratio, parts sand: one part clay	Feed, clay and water, pct solids	Ground clay, minus-2-μm esd, wt-pct	Electrical energy consumed, kW-hr/ton of feed
Total volume in grinder, pct of total	Clay, lb					
[2]52	66.2	1,200	3.0	40	79.7	210
86	132.4	1,200	3.0	40	66.6	169
[3]100	163.3	1,200	3.0	40	65.8	152
[2]52	70.5	1,400	2.5	40	80.8	220
86	141.0	1,400	2.5	40	70.1	180
[3]100	167.5	1,400	2.5	40	69.7	165

[1]Equivalent feed rate in all tests was 140 pounds per hour.
[2]At 52 percent, the charge volume was as used for batch tests, such as reported in tables 3 and 4.
[3]At 100 percent, the charge filled the grinder to the overflow port used for continuous operation.

On the basis of the batch test data, the conditions selected for the most favorable particle size reduction are as follows: (1) Grinding at 40 percent solids, (2) sand to mineral ratio of 2.5 to 1, (3) peripheral rotor speed of 1,400 rpm, and (4) feed rate of 140 pounds per hour. Particle-size reduction obtained in the 20-inch grinder with these operating conditions were similar to those obtained in the 10-inch unit. However, more favorable electrical energy consumption results were obtained with the 20-inch unit because energy consumption in the 20-inch unit was about 31 percent less than in the 10-inch grinder when a similar product was obtained from both.

Continuous Open-Circuit Studies

Single-Stage Grinding

The continuous open-circuit grinding plant was comprised of a screw-type feeder (for dry, coarse clay), a conditioner (for slurrying clay, water, and dispersant), a reagent feeder for dispersant, a screw-type positive displacement pump (for feeding into the grinder), and the attrition grinder.

In single-stage grinding, the clay, after mixing with water and dispersant, was pumped at the desired feed rate directly from the conditioner into the grinder through its bottom entry. The ground clay slurry, free of the grinding medium which remained in the grinder, overflowed through a port at the top of the grinder and was sampled at intervals for pulp density, feed rate, and particle-size determination. Electrical energy consumption was determined from rpm and torque meter readings, from a continuous recording wattmeter and by periodic volt-ampere readings taken from electrical input to the grinder motor during the tests. Figure 3 is a flowsheet showing the continuous open-circuit grinding test procedures.

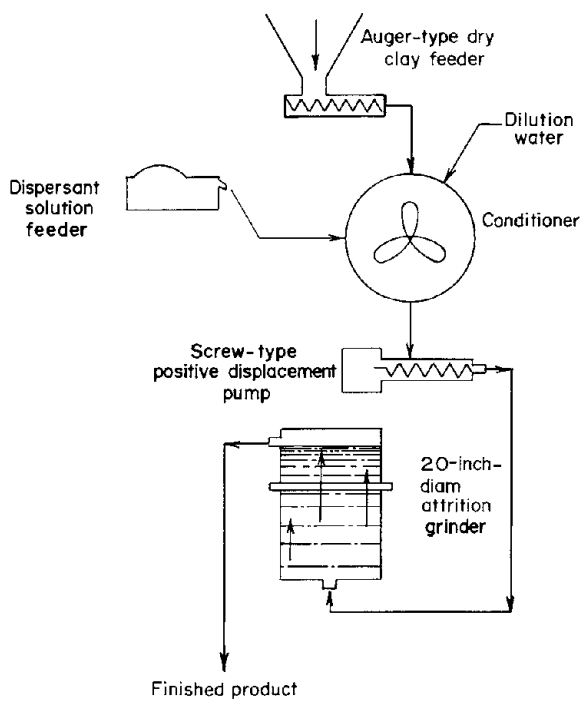

FIGURE 3. - Schematic flowsheet of continuous open-circuit grinding.

Results of single-stage open-circuit grinding tests at varying feed rates in the 20-inch-diameter grinder are given in table 5 and are analogous to the results previously reported (4) for the 10-inch-diameter grinder.

A summation of these results are as follows:

1. At an equivalent feed rate, continuous grinding was not as effective as batch grinding. Continuous grinding at a feed rate of 140 pounds per hour gave a product containing 64.4 percent minus-2-micrometer-esd clay; whereas batch grinding yielded a product containing 72 percent minus-2-micrometer esd.

2. Higher feed rates yielded final products containing progressively smaller percentages of minus-2-micrometer-esd material.

3. The quantity of minus-2-micrometer-esd material produced increased as a direct function of the feed rate; for example, at a feed rate of 140 pounds per hour, 76.9 pounds per hour of minus-2-micrometer-esd material was produced while at a feed rate of 840 pounds per hour, 218 pounds per hour of minus-2-micrometer-esd material was produced.

4. The amount of minus-2-micrometer-esd material produced per unit of clay feed decreased with increasing feed rates; for example, at a feed of 140 pounds per hour, 0.55 pound of minus-2-micrometer-esd material was produced per pound of feed, whereas at 840 pounds per hour 0.26 pound was made.

5. As the clay feed rate was increased, electric energy consumed by the grinder decreased per unit of feed treated and per unit of minus-2-micrometer-esd material produced.

TABLE 5. - Influence of feed rate on particle size reduction and power consumed during single-stage grinding[1]

Feed rate, lb/hr	Ground clay, minus-2-μm esd, wt-pct	Minus-2-μm esd produced, lb/hr	Minus-2-μm esd produced, lb/lb of feed	Energy consumed, kW-hr	
				Per ton raw feed	Per ton minus-2-μm clay produced
[2]140	72.2	87.8	0.63	178	284
140	64.4	76.9	.55	197	359
280	51.7	118.2	.42	101	240
420	46.4	155.0	.37	64	174
560	40.3	172.5	.31	45	145
840	35.5	218.0	.26	29	103

[1]Test conditions:
Slurry feed (clay and water): 40 percent solids.
Grinding medium: 175 pounds minus 14- plus 28-mesh Ottawa sand.
Peripheral rotor speed: 1,400 feet per minute.
Dispersant: Tetrasodium pyrophosphate, 6 pounds per ton of feed.
[2]Batch grinding test.

Modified Single-Stage Grinding

A series of tests was made to investigate the possibility of improving single-stage grinding by using a modified system for recirculating loads in the grinder circuit. These tests were designed similar to earlier 10-inch continuous grinding tests described by Stanczyk (4, pp. 8-10). However, the arrangement of equipment for these tests in the 20-inch grinder was revised so that positive and independent control could be maintained over the feed rate and the rate of recirculating load. A schematic diagram of the equipment and pulp flow used in the tests is shown in figure 4.

Results of these tests given in table 6 show that the 20-inch grinder behaved in a similar manner to the 10-inch unit. The data showed that particle reduction was less in tests made with a recirculating load. This

indicated that continuous recycling of the slurry probably causes short circuiting of the material through the grinding zone and impaired particle-size reduction. The quantity of minus-2-micrometer-esd material in the finished product and the electrical energy consumed in grinding did not vary appreciably as the recirculating load increased, except in the last test where there was a noticeable decrease in both the electrical energy and the amount of minus-2-micrometer clay in the product.

TABLE 6. - Results of single-stage open-circuit grinding tests made with recirculating loads

Recirculating load		Ground products, minus-2-μm-esd clay, wt-pct	Minus-2-μm-esd clay produced, lb/hr	Electrical energy consumed, kW-hr	
Lb/hr	Increase over feed, pct			Per ton raw feed	Per ton minus-2-μm clay produced
0	0	60.2	71.7	146	285
140	100	59.5	70.7	124	246
280	200	58.2	68.9	126	256
700	500	55.8	65.5	118	252
1,120	800	47.7	54.2	85	220

Test conditions:
Raw feed rate: 140 pounds per hour.
Slurry feed (clay and water): 40 percent solids.
Grinding medium: 175 pounds minus 14- plus 28-mesh Ottawa sand.
Peripheral rotor speed: 1,400 feet per minute.
Dispersant: Tetrasodium pyrophosphate, 6 pounds per ton of feed.

Multiple-Stage Grinding

As single-stage open-circuit grinding yielded less particle-size reduction than was obtained in batch tests, multiple-stage grinding tests were investigated to increase grinding efficiency. Since only one attrition grinder was available for continuous multiple-stage grinding, the tests were made using the following procedure: The grinder was given a starting charge with the proper amounts of raw clay, water, dispersant, and grinding media. The batch was ground for a predetermined time equivalent to the single-pass feed rate. Then the raw clay slurry was fed to the grinder in a single-stage pass at the desired feed rate. The slurry product from this first-stage grind was collected in a tank and used as stock feed for the second-stage grind. To prevent settling, the collected slurry was agitated continuously and pumped to the grinder at a feed rate equivalent to the original dry clay feed rate. The

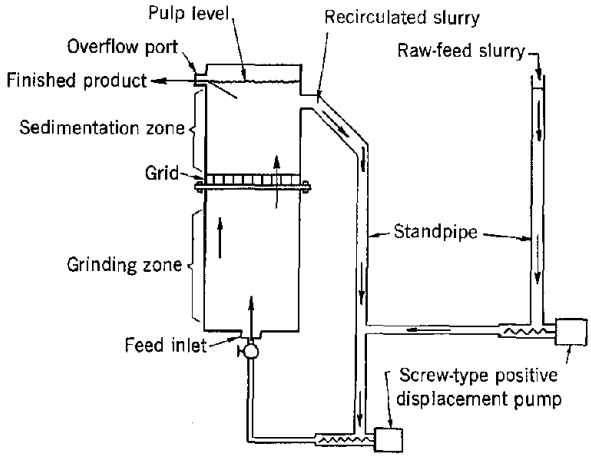

FIGURE 4. - Schematic diagram of modified single-stage grinding.

procedure was repeated for as many stages as desired. Grinder discharge samples from each successive stage of grinding were collected and evaluated.

The data obtained from the multiple-stage grinding tests are shown in table 7. The feed rates ranged from 140 to 840 pounds per hour using one, two, three, four, and six stages of grind. Results showed that multiple-stage grinding of the kaolin clay was more effective than single-stage grinding. Multiple-stage grinding using three stages at a 420-pound-per-hour feed rate gave a product containing 72 percent minus-2-micrometer-esd clay, whereas single-stage grinding at 140 pounds of clay per hour yielded a product containing only 64 percent minus-2-micrometer-esd clay.

TABLE 7. - Results of multiple-stage open-circuit grinding tests made with different clay feed rates

Feed rate, lb/hr	Stage of grind	Equivalent feed rate at the indicated stage, lb/hr	Ground product, minus-2-μm-esd clay, wt-pct	Minus-2-μm-esd clay produced, lb/hr		Electrical energy consumed per ton minus-2-μm-esd clay produced, kW-hr	
				Each stage	At 140 pounds per hour feed rate	Each stage	Cumulative
140	Batch	-	72.2	87.8	87.8	284	284
140	1	140	64.4	76.9	76.9	359	359
140	2	70	83.7	27.0	-	962	516
140	3	47	89.7	8.4	-	3,023	703
280	1	280	51.7	118.2	-	289	289
280	2	140	67.9	45.3	81.5	608	341
420	1	420	46.4	155.0	-	173	173
420	2	210	61.6	63.8	-	414	244
420	3	140	72.0	43.7	87.5	640	310
560	1	560	40.3	172.5	-	146	146
560	2	280	49.8	53.2	-	496	229
560	3	187	61.5	65.5	-	424	273
560	4	140	68.0	36.4	81.9	750	326
840	1	840	35.6	219.2	-	103	103
840	2	420	43.1	63.0	-	336	156
840	3	280	51.6	71.4	-	339	193
840	4	210	58.0	53.8	-	442	226
840	5	168	64.6	55.4	-	419	249
840	6	140	69.3	39.5	83.7	577	275

Test conditions:
Slurry feed: 40 percent solids.
Grinding media: 175 pounds minus 14- plus 28-mesh Ottawa sand.
Peripheral rotor speed: 1,400 feet per minute.
Dispersant: Tetrasodium pyrophosphate, 6 pounds per ton of feed.

Compared on an equivalent clay-feed-rate-per-grinder basis, multiple-stage grinding required less electrical energy to produce a ton of minus-2-micrometer-esd material than single-stage grinding. In three-stage grinding at a 420-pound-per-hour feed rate, the electrical energy required to produce a ton of minus-2-micrometer-esd material was 310 kilowatt-hours while for double and single stage grinds with 280- and 140-pound-per-hour feed rates the electrical energy requirements were 341 and 359 kilowatt-hours per ton, respectively. The three-stage grind gave about the same yield of minus-2-micrometer-esd material as was obtained in the batch test, but the electrical energy consumed was higher than that used in the batch test.

Evaluating these continuous open-circuit grinds on the basis of grade of product, yield of minus-2-micrometer-esd material, and electrical energy consumption indicated that the three-stage grind was superior. However, the batch grind still yielded better results than was obtained by any of the continuous tests.

Continuous Closed-Circuit Grinding

Test Procedure

The closed-circuit grinding plant consisted of the same equipment as used in the open-circuit grinding plant plus a 6-inch-diameter continuous solid bowl centrifuge. The centrifuge overflow was the finished product while the centrifuge underflow (oversize material) was returned to the grinder as circulating load for additional comminution. A schematic flowsheet of the closed-circuit operation is given in figure 5.

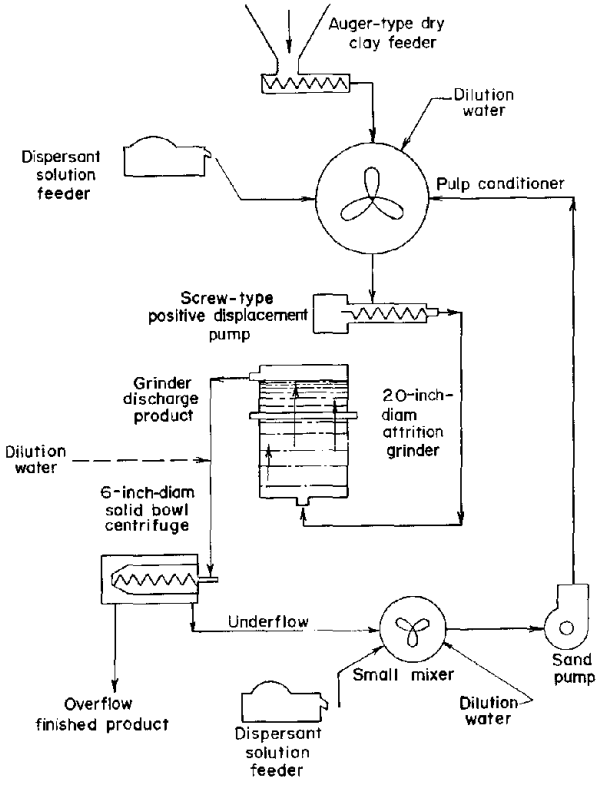

FIGURE 5. - Schematic flowsheet of continuous closed-circuit grinding.

During operation, the raw clay feed was mixed in the pulp conditioner with water, tetrasodium pyrophosphate as the dispersant, and centrifuge oversize material. The addition of water was adjusted to maintain a predetermined pulp density. The mixed slurry was pumped into the grinder at a controlled feed rate through the feed port in the bottom of the machine by the positive displacement pump. The ground clay slurry overflowed through a port at the top of the grinder and discharged into the centrifuge feed inlet. The grinder discharge was free of Ottawa sand grinding medium because the coarse sand was retained in the grinding zone of the machine. In some tests, dilution water was added to the grinder discharge to maintain the centrifuge feed at the

desired pulp density. Dilution water also was added to the centrifuge underflow (oversize material) to dilute it to the same pulp density as the mixture in the pulp conditioner. The centrifuge underflow, the dilution water, and the makeup dispersant were thoroughly mixed in a small mixer and then pumped to the pulp conditioner. This oversize unfinished material was mixed in the pulp conditioner with the raw dry feed, water, and dispersant to obtain the desired slurry density. Concurrently, the overflow from this conditioner was fed to the grinder, thus closing the grinding circuit.

The amount of centrifuge overflow and underflow was controlled by the centrifuge speed. Samples of the raw feed, grinder discharge, centrifuge underflow and overflow, and in some tests centrifuge feed were taken during the test to monitor the equilibrium of the system and to obtain samples for size analysis. Electrical energy consumption was determined in the same manner as in the open-circuit grinding tests.

Centrifuge Classification Tests

In continuous closed-circuit tests made with the 10-inch-diameter grinder (5), a bowl classifier was used for separating the grinder discharge into finished product and oversize material for regrind. However, the low efficiency of this classifier prevented satisfactory operation of closed-circuit grinding in these earlier tests. For larger scale testing with the 20-inch-diameter grinder, a 6-inch-diameter solid bowl continuous centrifuge was used to classify the ground clay in closed-circuit grinding tests. Use of the centrifuge as a classifier allowed operational control for obtaining a wide variation in grade and recovery of minus-2-micrometer material in the overflow and in the yield of underflow product (oversize material) for recycle in the grinding circuit.

Preliminary centrifuge tests were made to determine the centrifuge classification capabilities prior to making the closed-circuit grinding tests. These capabilities not only included the ability of the centrifuge to classify the feed and produce a high-grade overflow product with good recoveries of the minus-2-micrometer-esd material, but also to effectively yield an overflow product with particle size satisfactory as a finished product and an underflow of sufficient quantity for recycling at the desired rate of circulating load.

Tests were made to establish the effect of feed rate, feed slurry percent solids, and centrifuge speed on the classifying capabilities of the centrifuge and the amount of underflow produced for recycling as circulating load (at a 140-pound-per-hour feed-rate basis). The clay feed contained 65 percent minus-2-micrometer-esd material. The results of these tests, given in table 8, show that products containing as much as 98.4 percent minus-2-micrometer-esd kaolin were obtained with relatively high recoveries of the minus-2-micrometer-esd content of the feed at high feed rates. However, the amounts of underflow obtained for circulating load were not satisfactory in most tests. Conditions of high centrifuge speed and high percent solids were most favorable for yielding the desired amounts of underflow for circulating load.

TABLE 8. - Results of classification tests made in the 6-inch continuous centrifuge

Feed rate,[1] lb/hr	Circulating load, pct[2]		Pulp density of feed, pct solids	Centrifugal speed, rpm	Minus-2-μm in overflow product	
	Desired	Obtained			Grade, pct	Recovery, pct
280	100	25	15	1,500	84.2	95.5
280	100	59	15	3,000	94.0	88.1
280	100	87	15	5,000	98.4	76.0
560	300	60	15	1,500	75.8	93.8
560	300	131	15	3,000	86.1	89.2
560	300	161	15	5,000	92.3	81.3
840	500	[3]196	15	1,500	76.2	[3]84.7
840	500	[3]103	15	3,000	83.5	[3]93.5
840	500	207	15	5,000	91.3	86.8
280	100	50	30	1,500	80.0	91.3
280	100	95	30	3,000	92.8	78.2
280	100	134	30	5,000	96.1	59.6
560	300	64	30	1,500	74.1	95.0
560	300	129	30	3,000	87.6	87.7
560	300	209	30	5,000	94.8	76.9
840	500	54	30	1,500	72.5	97.5
840	500	138	30	3,000	84.0	93.9
840	500	249	30	5,000	93.7	81.1
280	100	54	40	1,500	71.6	89.4
280	100	91	40	3,000	86.0	73.9
280	100	126	40	5,000	92.4	51.7
560	300	67	40	1,500	68.1	93.6
560	300	132	40	3,000	78.1	84.1
560	300	193	40	5,000	87.1	67.1
840	500	57	40	1,500	66.3	96.6
840	500	95	40	3,000	75.8	89.0
840	500	237	40	5,000	84.9	77.1

[1]Feed contained 65 percent minus-2-micrometer-esd material.
[2]Based on a feed rate of 140 pounds per hour of raw clay to the grinder.
[3]These data appear to be in error. Careful examination of the raw data and the calculations indicate that incorrect sample weights probably were used. Unavailability of the samples made later reevaluation impractical.

Table 9 shows the results of tests made to study the effect of feed inlet position, particle size of the centrifuge feed, and centrifuge speed. These data show the following:

1. The quantity of centrifuge underflow and the grade of the product increases when feeding the centrifuge at the inlet closer to the underflow discharge. However, recovery of minus-2-micrometer-esd material was generally lower than when feeding in the other inlet port.

2. The grade of the product increases but recovery of minus-2-micrometer-esd material in the product decreases as the centrifuge speed increases.

3. The amount of underflow for circulating load increases as centrifuge speed increases. The overall grade of the overflow product did not appear to be greatly affected by the amount of minus-2-micrometer-esd material in the centrifuge feed, but the percent recovery decreased with the decrease percent of minus-2-micrometer material in the feed.

TABLE 9. - Six-inch-diameter centrifuge tests of kaolin showing the effect of inlet port position, feed particle size, and centrifuge speed on the overflow product

Centrifuge speed, rpm	Feed port	Feed,[1] minus-2-μm-esd clay, pct	Minus-2-μm-esd clay in overflow product		Circulating load, pct
			Grade, pct	Recovery, pct	
1,500	[2]1	65	71.3	90.5	48
1,500	[3]2	65	78.7	90.0	57
3,000	1	65	93.4	78.4	90
3,000	2	65	99.9	72.7	106
5,000	1	65	99.8	54.2	134
5,000	2	65	100.0	57.1	133
1,500	1	58	78.1	85.2	95
1,500	2	58	81.7	84.7	93
3,000	1	58	93.2	72.8	131
3,000	2	58	97.0	66.7	138
5,000	1	58	98.2	52.6	154
5,000	2	58	98.3	43.9	166

[1]Feed for these tests was at the rate of 280 pounds per hour at 40 percent solids. This is equivalent to 100 percent circulating load with 140 pounds per hour raw clay feed to grinder.
[2]Feed port No. 1 is closer to the overflow discharge.
[3]Feed port No. 2 is closer to the underflow discharge.

Additional centrifuge tests were used to show how centrifuge speed and the grade of feed affects the grade and recovery of the minus-2-micrometer-material in the overflow products. This information is shown in figure 6. Tests made to investigate the effect of pool depth in the centrifuge showed that more centrifuge underflow material was recovered when the centrifuge was operated at lower pool depths. The overall results of the centrifuge tests showed that (1) the grade of the overflow product is determined by the centrifuge speed, pulp density of the feed, feed rate, and percent minus-2-micrometer-esd material in the feed, and (2) the percent circulating load is affected by the above mentioned variables plus the feed inlet position and pool depth in the centrifuge.

Closed-Circuit Grinding

Parameters and results of batch and open-circuit grinding tests plus the operating characteristics of the 6-inch-diameter centrifuge were used as a guide to design the closed-circuit grinding tests. Results of these tests are

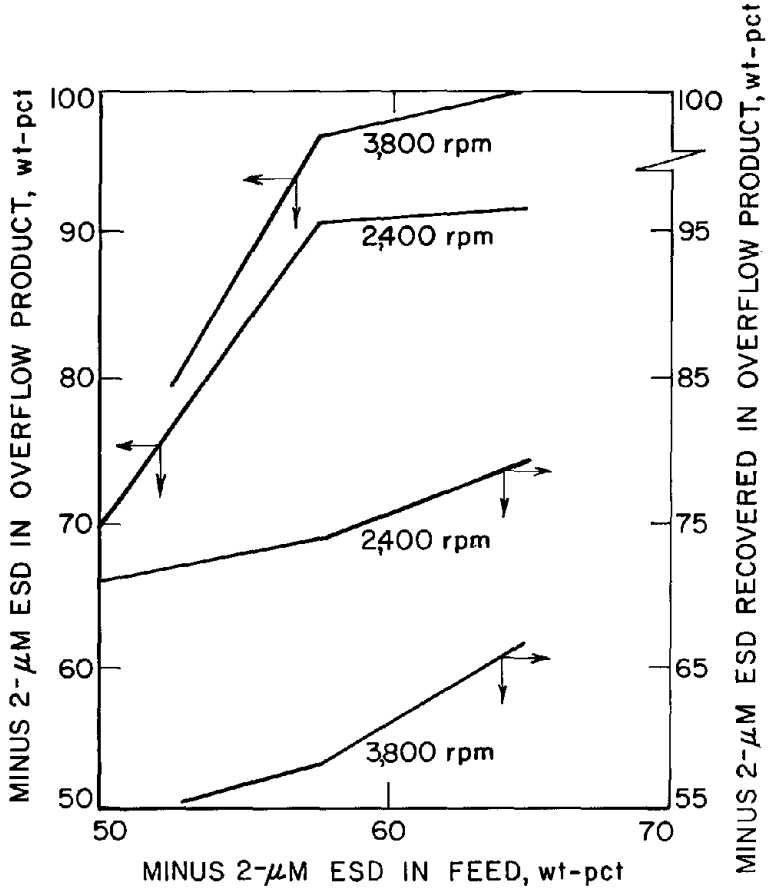

FIGURE 6. - Centrifugal classification of kaolin showing minus-2-micrometer esd in the feed versus minus-2-micrometer esd in product at various centrifuge speeds.

shown in table 10. Using a raw clay feed of 140 pounds per hour, the highest circulating load which could be maintained was 183 percent. In a test at a higher feed rate of 170 pounds per hour, a 145-percent circulating load was used and at a lower feed rate of 106 pounds per hour circulating loads up to 185 percent were used.

The data show that the production of minus-2-micrometer-esd material increased as the circulating load increased from 100 to 153 percent, but there was no change from 153 to 183 percent. Similarly, recovery of the minus-2-micrometer-esd material in the centrifuge overflow product decreased as the quantity of underflow being circulated increased. The grade of the centrifuge overflow product in all tests was less than the target of 80 percent minus-2-micrometer-esd material.

Calculation of electrical energy consumed by the grinder was based on the amount of raw clay fed to the circuit and on the quantity of minus-2-micrometer-esd clay produced. In tests made with fixed-raw-clay feed rates, the energy consumption per ton of raw feed was nearly the same regardless of variations in circulatory load.

Energy consumption based on the production of minus-2-micrometer-esd kaolin generally decreased as percent of circulating load was increased.

During the continuous closed-circuit grinding tests, operating conditions could be controlled for more closely determining the classification capability of the continuous centrifuge. Accordingly, a number of tests made to investigate the effect of reducing the percent solids of the centrifuge feed showed that diluting the grinder discharge significantly improved centrifuge classification. The results of tests made with centrifuge feeds at 40, 30.5, and 15.2 percent solids are shown in table 11. These data show that grade and recovery of minus-2-micrometer-esd clay in the overflow product increased as the percent solids of feed was reduced. Best results, obtained when the centrifuge feed was 15.2 percent solids, yielded a product containing 80 percent minus-2-micrometer-esd material at 76 percent recovery.

TABLE 10. - Results of closed-circuit grinding tests[1]

Test No.	Raw feed, lb/hr	Circulating load, pct	Feed to grinder, lb/hr	Minus 2-μm-esd clay, pct			Minus-2-μm-esd clay produced, lb/hr	Recovery minus-2-μm-esd clay in centrifuge overflow, pct	Energy consumed, kW-hr	
				Centrifuge overflow	Grinder discharge	Grinder feed			Per ton of raw feed	Per ton of minus-2-μm-esd clay produced
1	[2]140	0	140	-	64.4	9.5	76.1	-	197	359
2	140	100	280	70.0	50.5	20.3	86.1	69.3	193	314
3	140	153	355	77.0	50.9	24.2	94.7	59.2	193	285
4	140	183	396	76.9	50.4	26.2	94.9	54.7	197	291
5	170	145	418	68.5	47.3	23.3	100.5	59.2	176	298
6	106	100	212	75.3	56.3	23.4	69.7	67.0	279	425
7	106	185	302	75.5	51.8	28.6	70.1	51.3	277	419

[1]Test conditions: Pulp density of grinder and centrifuge feed: 40 percent solids.
Grinding medium: 175 pounds minus 14- plus 28-mesh Ottawa sand.
Peripheral rotor speed: 1,400 feet per minute.
Dispersant: Tetrasodium pyrophosphate, 6 pounds per ton of raw feed.

[2]Open-circuit grinding test.

TABLE 11. - Influence of centrifuge feed pulp density in closed-circuit grinding on grade and recovery of product[1]

Grinder feed, lb/hr	Centrifuge feed, pct solids	Minus 2-μm-esd clay, pct			Minus-2-μm-esd clay produced, lb/hr	Recovery minus-2-μm-esd clay in centrifuge overflow, pct	Energy consumed, kW-hr	
		Centrifuge overflow	Grinder discharge	Grinder feed			Per ton of feed	Per ton of minus-2-μm-esd clay produced
280	40.0	70.0	50.5	20.3	86.1	69.3	193	314
282	30.5	74.8	51.5	21.7	84.2	72.3	193	321
282	15.2	80.0	52.0	19.5	91.7	76.4	197	301

[1]Test conditions: Raw feed rate: 140 pounds per hour.
Circulating load: 100 percent.
Pulp density of grinder feed: 40 percent solids.
Peripheral rotor speed: 1,400 feet per minute.
Dispersant: Tetrasodium pyrophosphate, 6 pounds per ton raw feed.

Evaluation of the closed-circuit grinding tests indicated that the mixed grinder feed, which contains recirculated centrifuge underflow product and raw feed, did not produce as much minus-2-micrometer-esd material as had been anticipated. Therefore, a modified two-stage open-circuit grinding test was made to investigate the relative grindability of raw feed in comparison with the centrifuge underflow product. In the first stage of this test, the raw feed was ground by the continuous open-circuit method and the grinder discharge was centrifuged to yield an overflow product of finished grade and an underflow product which was collected. In the second stage, the centrifuge underflow product was fed to the grinder at the same feed rate and percent solids as in the first stage and ground using the open-circuit method. The grinder discharge from this second grinding stage was centrifuged in a similar manner to that used in the first stage. The results of this modified two-stage open-circuit grind are shown in table 12. These data indicate that when similar grinding conditions were used, about 100 percent more minus-2-micrometer material was produced from the raw feed than from the centrifuge underflow. For example, about 119 pounds per hour of minus-2-micrometer material was obtained from grinding the raw feed whereas only 66 pounds per hour of minus-2-micrometer material was produced from grinding the centrifuge underflow.

TABLE 12. - Results of a modified two-stage open-circuit grinding test on kaolin raw feed and centrifuge recycle material

Test stage	Grinder					Centrifuge				
	Feed			Discharge		Product (overflow)		Recycle (underflow)		Speed, rpm
	Lb/hr	Solids, pct	Minus-2-μm-esd clay, pct	Minus-2-μm-esd clay, pct	Minus-2-μm-esd clay produced, lb/hr	Lb/hr	Minus-2-μm-esd clay, pct	Lb/hr	Minus-2-μm-esd clay, pct	
1	272	39 3	9.4	53.3	119.4	101	79.8	171	37.1	3,800
2	275	39.6	37.1	61.3	66.0	99	86.4	175	46.7	5,000

Based on the results of this modified two-stage open-circuit grinding test, a modified two-stage, closed-circuit, continuous grinding flow scheme was investigated. In this treatment scheme, the kaolin was open-circuit ground in two stages with continuous centrifuges after each stage to remove the finished product. The centrifuge underflow from the second stage was circulating load which was recycled and mixed with the raw clay feed at the head of the circuit. Figure 7 is a flowsheet of this system.

Because only one grinder and one centrifuge were available for this test, the centrifuge underflows from the first and second stage grinds were collected and fed back to the system when required. The feed to the second stage grinder was the same feed rate as the underflow rate from the first stage centrifuge. Results of this modified continuous grinding circuit, table 13, show that the grade of the final product was 88.5 percent minus-2-micrometer. The total amount of minus-2-micrometer-esd material removed from the circuit

was 197.3 pounds per hour but 32.3 pounds of this material was in the raw feed. Therefore, 165 pounds per hour of minus-2-micrometer-esd material was produced from both grinders. The total electrical energy consumed by both grinders was 327 kilowatt hours per ton of minus-2-micrometer-esd clay produced.

TABLE 13. - Results of modified, continuous two-stage closed-circuit grinding

Test stage	Raw feed, lb/hr	Grinder discharge		Centrifuge					
		Lb/hr	Minus-2-µm, pct	Overflow			Underflow		
				Lb/hr	Minus-2-µm		Lb/hr	Minus-2-µm	
					Pct	Lb/hr		Pct	Lb/hr
1	[1] 223	285	59.6	143	88.8	127	[2] 142	30.2	42.9
2	0	142	63.4	80	87.9	70.3	[3] 62	31.7	19.7
Total	-	-	-	223	88.5	197.3	-	-	-

[1] Raw feed contained 14.5 percent minus-2-micrometer.
[2] Feed to second stage.
[3] Recycle to first stage.

Data presented in table 14 summarize results from grinding tests made in the 20-inch-diameter grinder using continuous closed-circuit, continuous open-circuit, and batch systems. Comparison on an equivalent feed basis showed that both closed-circuit grinding tests yielded higher grade products than was obtained with either open-circuit or batch grinding. The highest grade product, which contained 88.5 percent minus-2-micrometer-esd material, was obtained by a modified two-stage grind. Although the modified two-stage, closed-circuit grind yielded the highest grade product, this grind cannot be compared directly with the results of other tests because the equivalent feed rate of raw clay was only 112 pounds per hour whereas for all other tests in the table it was 140 pounds per hour. The total equivalent feed rate for the modified closed-circuit test was 142 pounds per hour per grinder, but this included 62 pounds per hour of recycled material from the second stage. Nevertheless it is believed that the modified two-stage, closed-circuit grind was the best continuous system tested for producing the greatest amount of particle size reduction. This is supported by the results of table 14 and by comparing the modified two-stage closed-circuit results with those of the open-circuit grind made at an equivalent

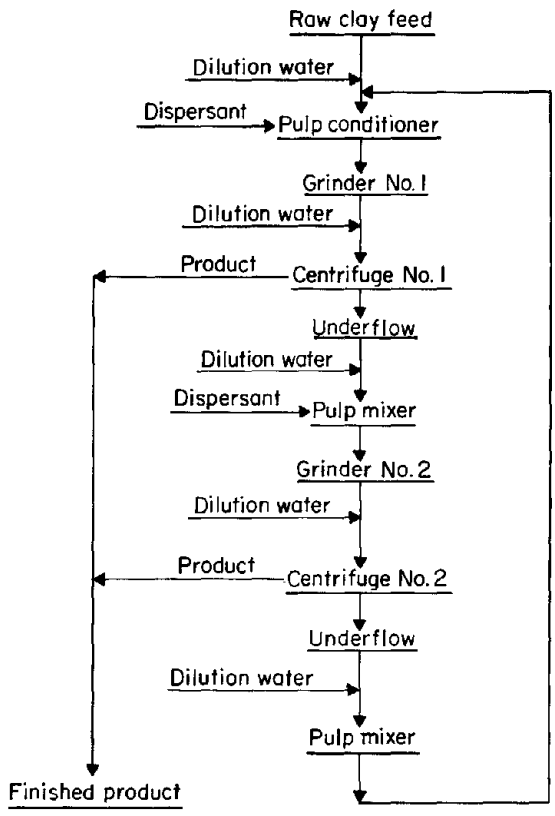

FIGURE 7. - Flowsheet of modified two-stage closed-circuit grinding system.

feed rate of 70 pounds per hour, shown in table 7. Even though the open-circuit test was made at a much lower feed rate, the grade of the ground product was only 83.7 percent minus-2-micrometer esd, considerably lower than the 88.5 percent minus-2-micrometer-esd product obtained with the closed-circuit grind. Energy consumption was greater in the closed-circuit grinding tests but this was offset by the significantly finer product which is usually more desirable to the paper-coating clay producers than energy requirements for grinding.

TABLE 14. - Comparison of results from various grinding tests[1]

Type of grind	Raw feed rate, lb/hr		Minus-2-μm-esd clay content of finished product, wt-pct	Minus-2-μm-esd clay produced at equivalent feed rate, lb/ton of raw feed	Energy consumed per ton of minus-2-μm-esd clay produced, kW-hr
	Gross	Equivalent			
Continuous closed-circuit:					
One-stage[2]	140	140	80.0	1,310	314
Modified two-stage	223	112	88.5	1,473	327
Continuous open-circuit:					
Single-stage	140	140	64.4	1,099	359
Two-stage	280	140	67.9	1,167	341
Three-stage	420	140	72.0	1,250	310
Six-stage	840	140	69.3	1,196	275
Batch[3]	-	140	72.2	1,254	284

[1]Test conditions: Slurry feed to grinder: 40 percent solids
Grinding medium: 175 pounds minus 14- plus 28-mesh Ottawa sand
Peripheral rotor speed: 1,400 feet per minute
Dispersant: Tetrasodium pyrophosphate, 6 pounds per ton raw feed

[2]Circulating load, 100 percent; pulp density of slurry to centrifuge, 15 percent solids.

[3]Batch test made by grinding 140 pounds of clay for 1 hour.

CONCLUSIONS

A 20-inch-diameter grinder was built and successfully operated for attrition-grinding a coarse Georgia kaolin to the particle size required for a delaminated paper-coating-grade clay.

Results obtained with this grinder were analagous with those obtained in earlier research on smaller 10- and 5-inch-diameter units. Of the three size machines, best results were obtained with the 20-inch unit. This indicates that grinding results should be satisfactory for units scaled up to larger, commercial size units.

Effective particle-size reduction of the coarse kaolin was obtained using batch, multiple-stage open-circuit, and closed-circuit grinding.

Best particle-size reduction was obtained using a modified two-stage closed-circuit grinding system with continuous solid bowl centrifuge for classification of the finished product.

REFERENCES

1. American Society for Testing Materials. Standard Method of Test for Grain-Size Analysis of Soils. D 422-63 in 1966 Annual Book of ASTM Standards: Part 11, Bituminous Materials; Soils; Skid Resistance, Phildelphia, Pa., 1966, pp. 191-202.

2. Feld, I. L., and B. H. Clemmons. Process for Wet Grinding Solids to Extreme Fineness. U.S. Patent 3,075,710, Jan. 29, 1963.

3. Feld, I. L., T. N. McVay, H. L. Gilmore, and B. H. Clemmons. Paper-Coating Clay From Coarse Georgia Kaolins by a New Attrition Grinding Process. BuMines RI 5697, 1960, 20 pp.

4. Stanczyk, Martin H., and I. L. Feld. Continuous Attrition Grinding of Coarse Kaolin (in Two Parts). 1. Open-Circuit Tests. BuMines RI 6327, 1963, 14 pp.

5. _____ Continuous Attrition Grinding of Coarse Kaolin (in Two Parts). 2. Closed-Circuit Tests. BuMines RI 6694, 1965, 13 pp.

6. _____ Investigation of Operating Variables in the Attrition Grinding Process. BuMines RI 7168, 1968, 28 pp.

7. _____ Ultrafine Grinding of Several Industrial Minerals by the Attrition Grinding Process. BuMines RI 7641, 1972, 25 pp.

INT.-BU.OF MINES,PGH.,PA. 18554