US007152919B2

(12) **United States Patent**
Wurzelbacher et al.

(10) **Patent No.: US 7,152,919 B2**
(45) **Date of Patent: Dec. 26, 2006**

(54) **WEARABLE KNEEL-SIT SUPPORT DEVICE**

(75) Inventors: **Steven J. Wurzelbacher**, Cincinnati, OH (US); **Ova E. Johnston**, Franklin, OH (US); **Stephen D. Hudock**, Cincinnati, OH (US)

(73) Assignee: **The United States of America as represented by the Department of Health and Human Services, Centers for Disease Control and Prevention**, Washington, DC (US)

(*) Notice: Subject to any disclaimer, the term of this patent is extended or adjusted under 35 U.S.C. 154(b) by 377 days.

(21) Appl. No.: **10/481,532**

(22) PCT Filed: **May 28, 2002**

(86) PCT No.: **PCT/US02/16790**

§ 371 (c)(1),
(2), (4) Date: **Dec. 19, 2003**

(87) PCT Pub. No.: **WO03/000093**

PCT Pub. Date: **Jan. 3, 2003**

(65) **Prior Publication Data**

US 2004/0232739 A1 Nov. 25, 2004

Related U.S. Application Data

(60) Provisional application No. 60/300,315, filed on Jun. 22, 2001.

(51) **Int. Cl.**
A47C 1/00 (2006.01)
A47C 7/50 (2006.01)

(52) **U.S. Cl.** **297/4**; 297/423.11

(58) **Field of Classification Search** 297/4, 297/423.11; 2/22, 24

See application file for complete search history.

(56) **References Cited**

U.S. PATENT DOCUMENTS

2,432,565 A 12/1947 Ferguson

(Continued)

FOREIGN PATENT DOCUMENTS

EP 0 836 821 A 4/1998

(Continued)

OTHER PUBLICATIONS

Balans Produkter AB website, "The Alternative for All Kneeling Work" (2 pages).

(Continued)

Primary Examiner—Milton Nelson, Jr.
(74) *Attorney, Agent, or Firm*—Klarquist Sparkman, LLP

(57) **ABSTRACT**

A wearable kneel-sit support device includes a U-shaped body that is pivotally connected to both a seat member and a base member. A linking member connects the seat member and the base member, such that moving one of the seat member and the base member causes both the seat member and the base member to rotate from a folded position adjacent the leg of the user to an unfolded position. In the unfolded position, the base member can rest on a horizontal surface and the seat member is substantially parallel to the base member, so that the wearer can sit on the seat while kneeling. The device may be worn on the lower leg of a user in a folded position to allow unhindered ambulation.

24 Claims, 8 Drawing Sheets

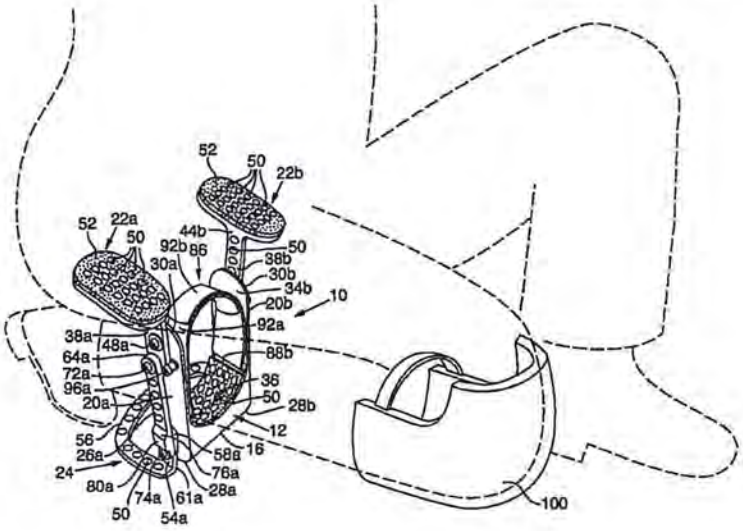

U.S. PATENT DOCUMENTS

2,631,652	A	3/1953	Bannister
3,025,526	A	3/1962	Ramon
3,863,978	A	2/1975	Gillings, Jr.
4,377,309	A	3/1983	Mengshoel
4,589,699	A	5/1986	Dungan
4,772,071	A	9/1988	Richards
5,073,986	A	12/1991	Farrago
5,125,479	A	6/1992	Nemes et al.
5,380,021	A	1/1995	Doherty
5,577,800	A	11/1996	Earl, Jr.
5,865,507	A	2/1999	Earl, Jr.
6,089,667	A	7/2000	Hobbs

FOREIGN PATENT DOCUMENTS

GB	2098060	11/1982

OTHER PUBLICATIONS

Orthobionics website "Knee Saver" (1 page).

Racatac Products, Inc. website, "Protect Your Knees, Help Your Back, Work Fast and Easty with the RACATAC™" (4 pages).

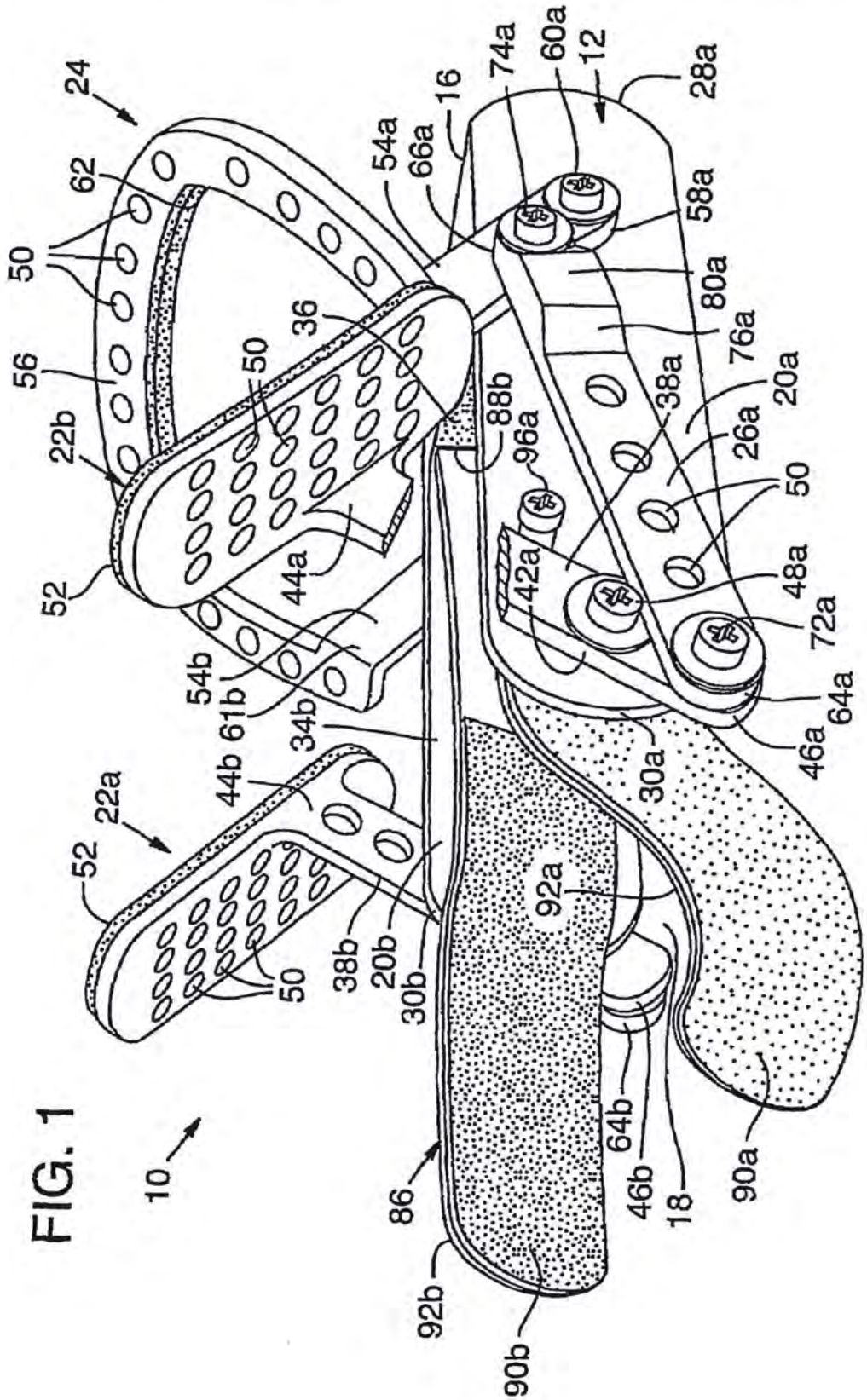
24
62
50
56
22b
52
22a
52
50
44b
54b
61b
34b
44a
50
36
54a
66a
16
74a
60a
12
28a
58a
80a
76a
38a
20a
26a
50
48a
72a
64a
46a
30a
88b
96a
42a
92a
38b
20b
30b
86
92b
90b
64b
46b
18
90a
10

FIG. 1

FIG. 2

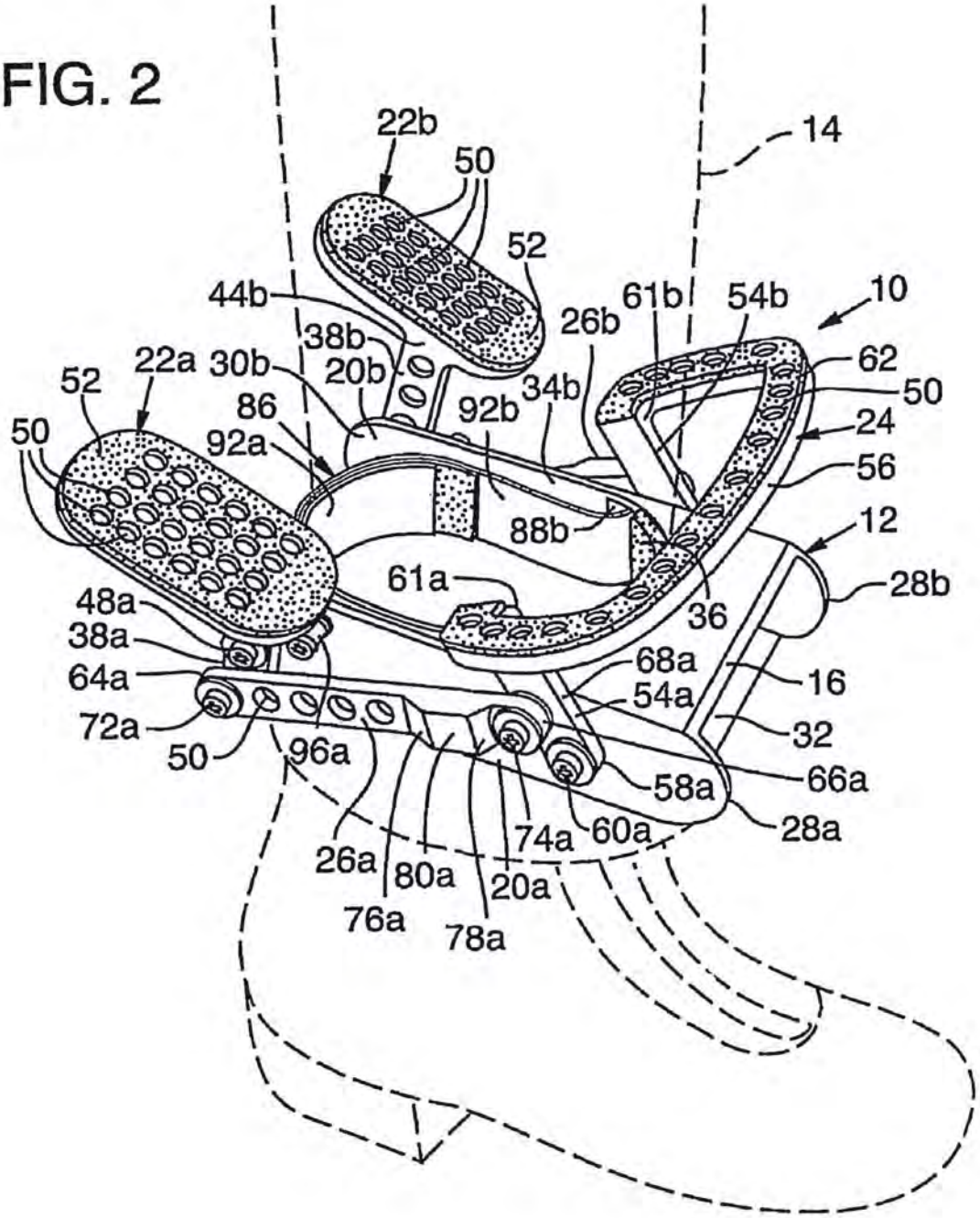
22b
50
52
14
44b
38b
26b
61b
54b
10
22a
30b
20b
62
52
86
92b
34b
50
50
92a
24
56
88b
12
61a
28b
48a
36
38a
68a
64a
16
54a
72a
32
50
96a
66a
58a
28a
74a
60a
26a
80a
20a
76a
78a

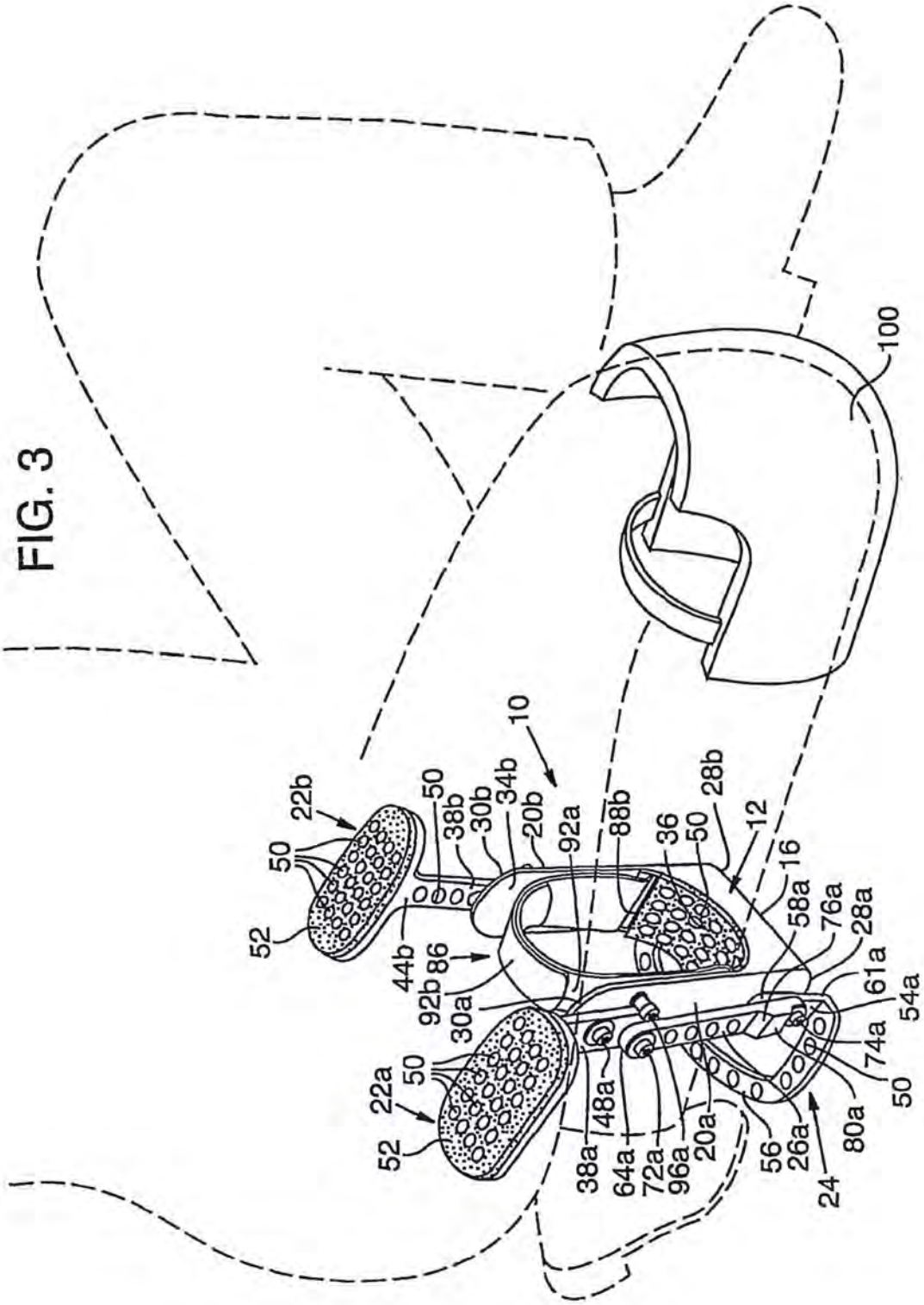
100
10
22b
50
52
50
38b
30b
34b
20b
92a
88b
36
50
28b
12
16
58a
76a
28a
61a
54a
74a
50
80a
26a
24
56
20a
96a
72a
64a
48a
38a
22a
50
52
30a
92b
86
44b

FIG. 3

FIG. 4

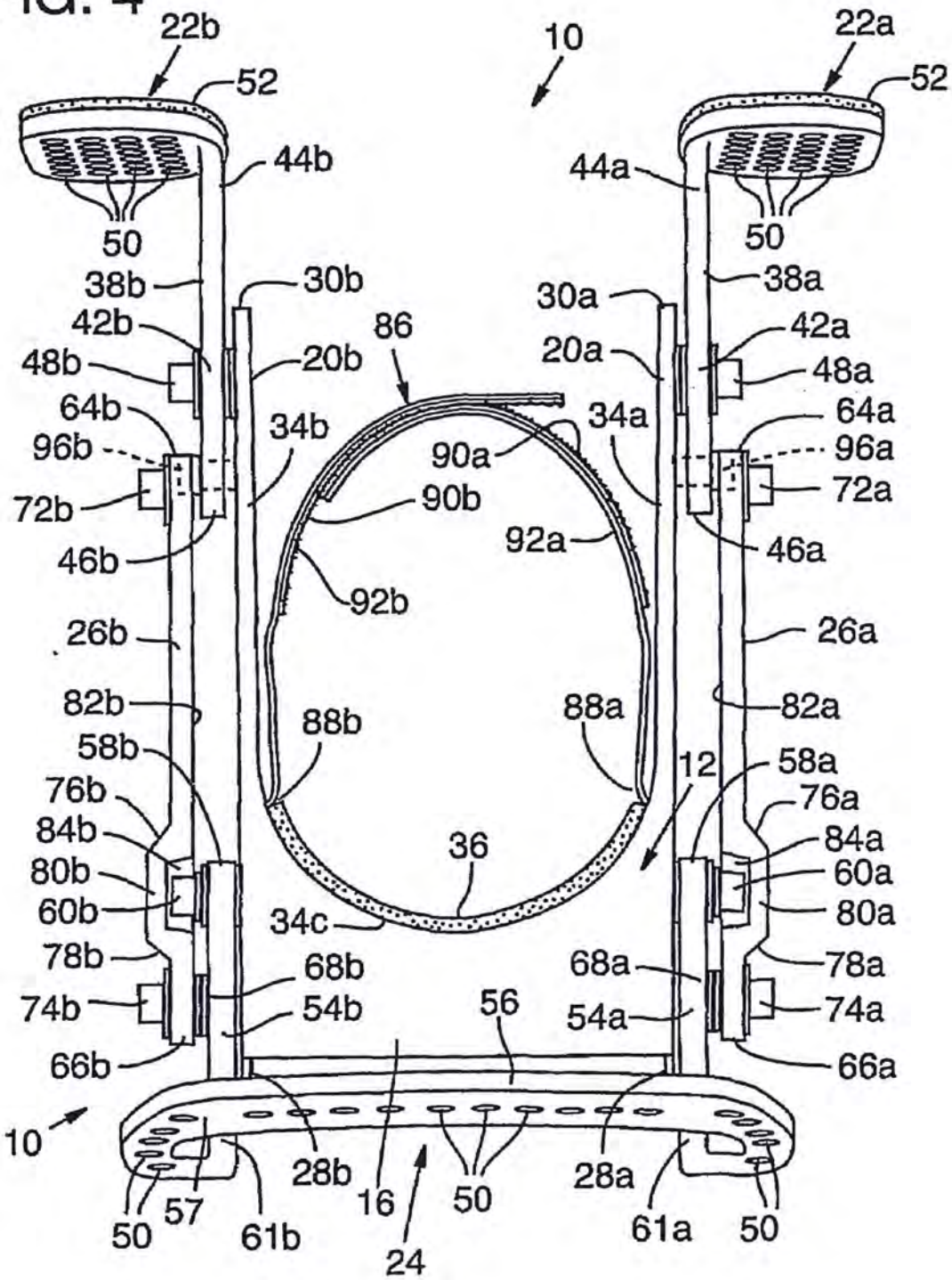
22b
10
22a
52
52
44b
44a
50
50
38b
30b
30a
38a
42b
86
42a
48b
20b
20a
48a
64b
34b
34a
64a
96b
90a
96a
72b
90b
72a
46b
92a
46a
92b
26b
26a
82b
88b
88a
82a
58b
12
58a
76b
76a
84b
36
84a
80b
60a
60b
34c
80a
78b
68b
68a
78a
74b
54b
56
54a
74a
66b
66a
10
28b
28a
50
57
16
50
61b
61a
50
24

FIG. 5

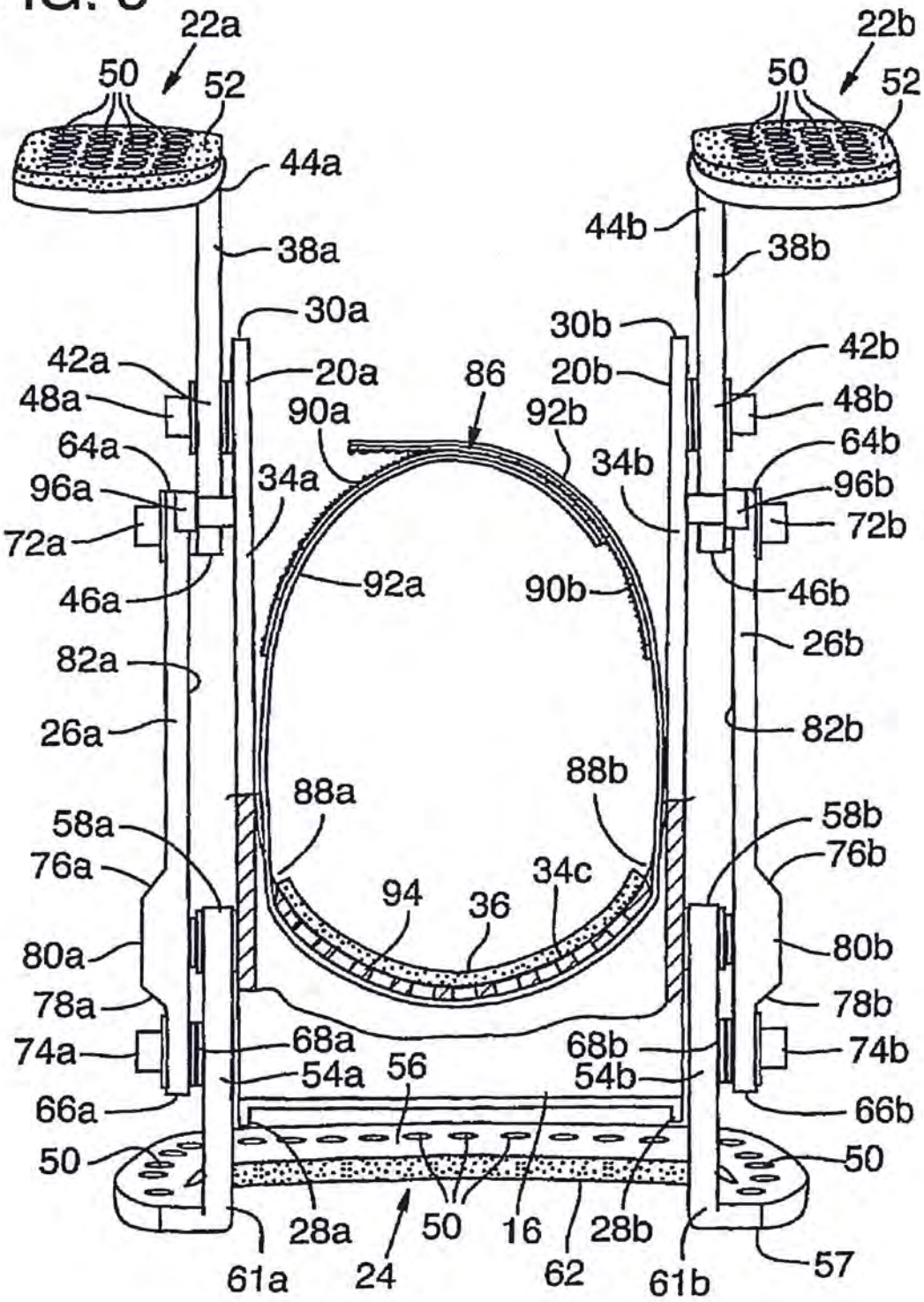
22a
22b
50
52
50
52
44a
44b
38a
38b
30a
30b
42a
20a
86
20b
42b
48a
90a
92b
48b
64a
34a
34b
64b
96a
96b
72a
72b
46a
92a
90b
46b
82a
26b
26a
82b
88a
88b
58a
58b
76a
34c
76b
94
36
80a
80b
78a
78b
74a
68a
68b
74b
54a
56
54b
66a
66b
50
50
28a
50
16
28b
61a
24
62
61b
57

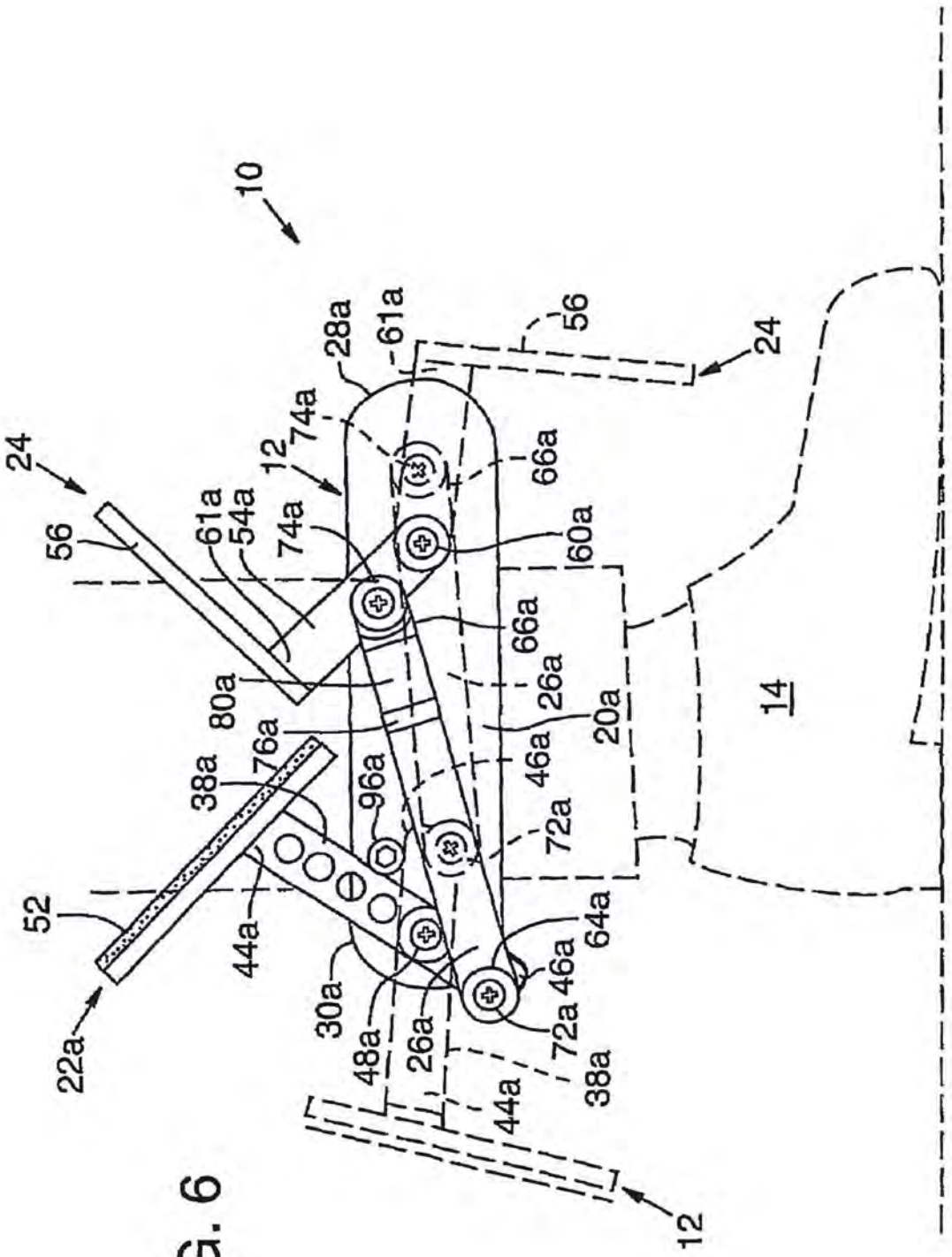
10
24
56
61a
54a
74a
12
28a
61a
74a
56
24
66a
60a
66a
26a
20a
14
80a
76a
38a
96a
46a
72a
52
44a
64a
46a
30a
48a
26a
72a
38a
22a
44a
12

FIG. 6

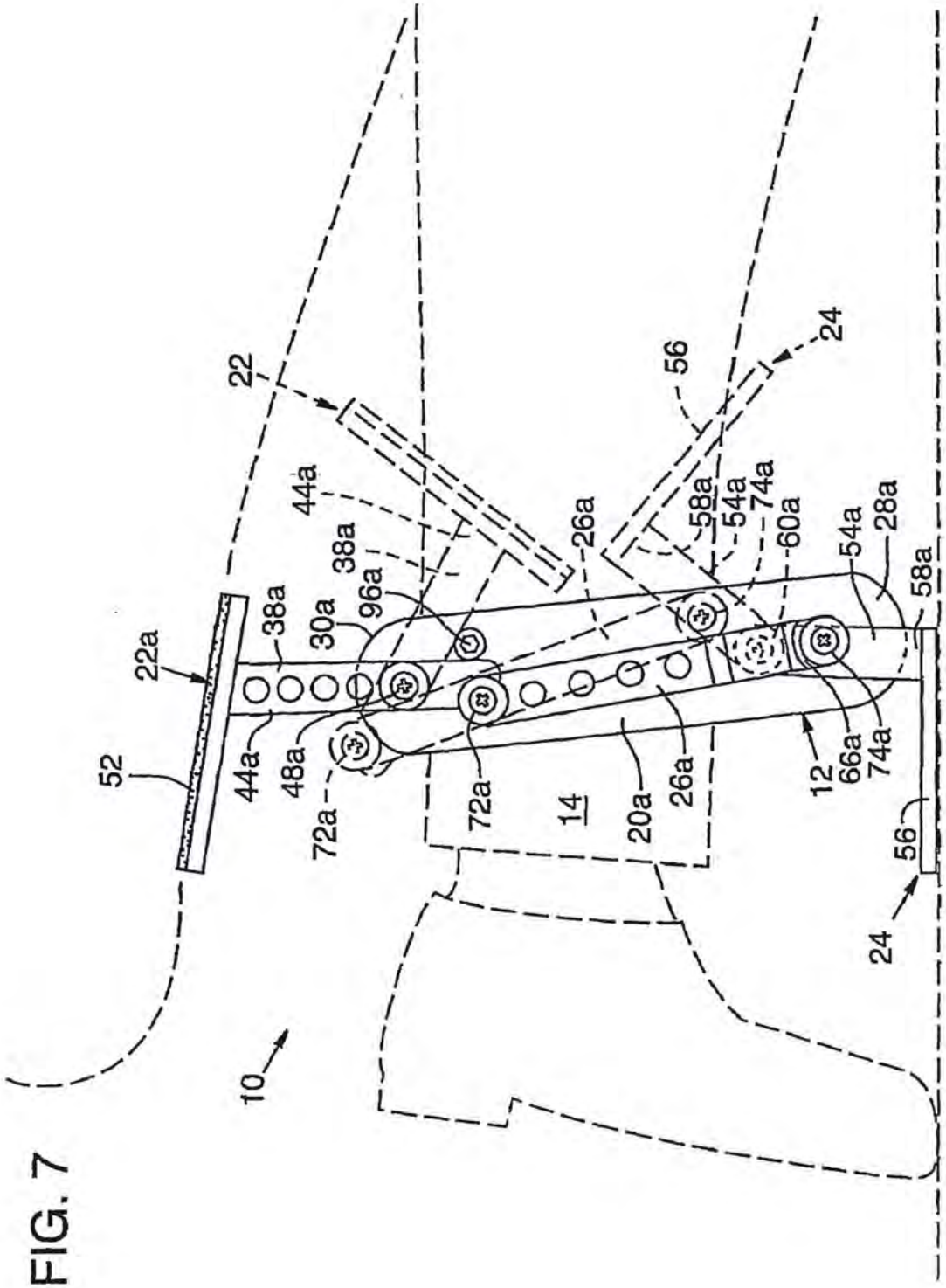
22
22a
52
44a
38a
30a
96a
38a
44a
48a
72a
72a
14
20a
26a
26a
22
56
24
58a
54a
74a
60a
54a
28a
58a
66a
74a
12
56
24
10

FIG. 7

FIG. 8

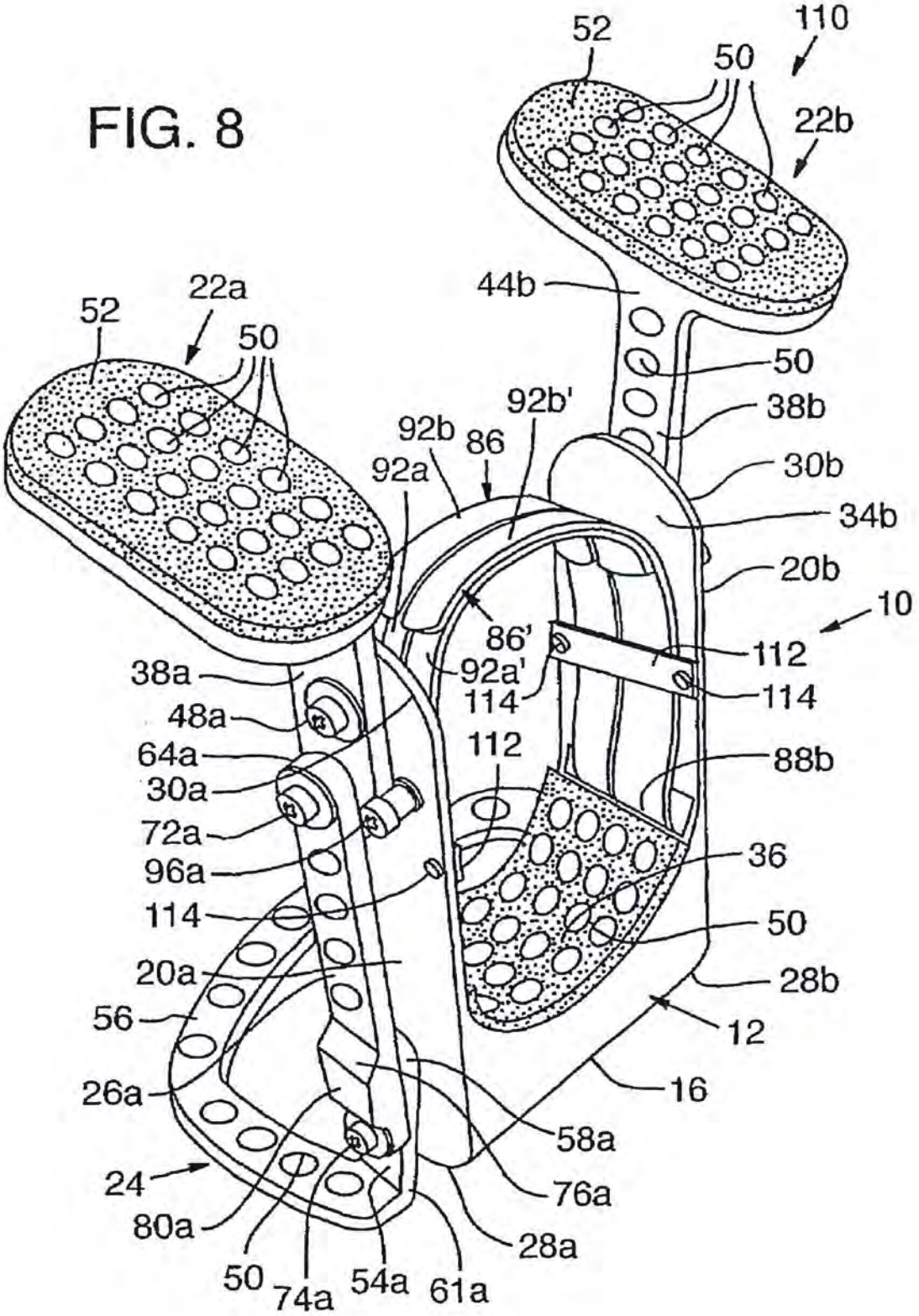
52
110
50
22b
22a
52
50
44b
50
38b
92b'
92b
86
92a
30b
34b
20b
10
86'
112
92a'
114
114
38a
48a
64a
30a
72a
96a
114
20a
56
26a
24
80a
50
74a
54a
61a
28a
76a
58a
16
12
28b
50
36
88b
112

WEARABLE KNEEL-SIT SUPPORT DEVICE

CROSS-REFERENCE TO RELATED APPLICATIONS

This is the National Stage of International Application No. PCT/US02/16790, filed May 28, 2002, which claims the benefit of U.S. Provisional Patent Application No. 60/300,315, filed Jun. 22, 2001.

FIELD OF INVENTION

This invention relates to devices that relieve pressure on a kneeling person, and more particularly to such devices that include a seat that supports a portion of the worker's weight while he is kneeling.

BACKGROUND

There are many occupations such as shipbuilding, mining, plumbing, carpet and floor installation, construction, repair, services, and auto body repair in which people must spend a considerable amount of time kneeling or squatting. Such people put 70% of their body weight on a few cubic centimeters of the tibia and patella while kneeling as opposed to putting 22% of their body weight on each knee while walking. Prolonged kneeling increases a person's risk of developing musculoskeletal knee disorders such as osteoarthrosis, meniscal lesions, chondromalacia, and bursitis. Also, it is uncomfortable to maintain a kneeling position for a long period, which can decrease productivity of workers.

Various studies have been made on injury to the knee from prolonged kneeling or squatting. Elsner et al., [Knee Joint Arthroses and Work-Related Factors] *Soz Praventivmed*, 1996; 41(2):98–106, found that men who worked on their knees had a significantly greater chance of developing arthrosis of the knee. Cooper et al., Occupational Activity and Osteoarthritis of the Knee, *Ann Rheum Dis* 1994 February; 53(2):90–3, found that men whose job entailed more than 30 minutes per day of squatting or kneeling had a significantly greater chance of developing osteoarthritis.

Kivimaki et al., Knee Disorders in Carpet and Floor Layers' and Painters, *Scand J Work Environ Health* 1992 October; 18(5):310–6, and Occupationally Related Ultrasonic Findings in Carpet and Floor Layers' Knees, *Scand J Work Eviron Health* 1992 December; 18(6):220–2, found that osteophytes of the patella were more common among carpet and floor layers than among painters, and that self-reported knee bursitis was also more prevalent in carpet and floor layers. Furthermore, ultrasonography of the knee showed thickening of the prepatellar or superficial infrapatellar bursa in 49% of the carpet and floor layers and 7% of the house painters. This ultrasonographic finding was associated with knee pain in kneeling postures.

Thun et al., Morbidity from Repetitive Knee Trauma in Carpet and Floor Layers, *Br J Ind Med* 1987 September; 44(9):611–20, found that self reported bursitis and arthritis of the knee were more common in terazzo workers who kneel than in other groups who seldom kneel. Coggon et al., Occupational Physical Activities and Osteoarthritis of the Knee. *Arthritis Rheum* 2000 July; 43(7):1443–9, found that the risk of developing knee osteoarthritis is higher for people who kneel or squat for prolonged periods of time. Sandmark et al., Primary Osteoarthrosis of the Knee in Men and Women as a Result of Lifelong Physical Load from Work, *Scand J Work Environ Health* 2000 February; 26(1):20–5, found that among men there is an association between kneeling and knee osteoarthrosis.

Kasch and Enderlein, [Damage to the Knee Joint in Ship Building] *Beitr Orthop Traumatol* 1986 October; 33(10): 487–94, reported that x-rays showed that there was an increased occurrence of knee injuries in welders as compared to other groups.

A study of ergonomics and shipbuilding by the National Institute for Occupational Safety and Health (NIOSH) found that kneeling or squatting for long periods of time may be related to the finding that the incidence of lower extremity musculoskeletal injury in domestic shipbuilding and ship repair industries is 300–220 percent higher than in the overall manufacturing sector. NIOSH also found that knee injuries have the highest cost compared to other injuries per employee per year.

The health risks and costs associated with prolonged kneeling and squatting have led to efforts to prevent such injuries. Such efforts have recognized the need to reduce the amount of flexion in the knee and the amount of contact stress applied to the facet of the knee joint. Efforts to reduce such stress would also reduce forces on the internal knee and lower back that are known risk factors for musculoskeletal knee disorders. Unfortunately, many of the devices that have been used in the past to relieve pressure on the knees are bulky, heavy, and of questionable durability.

U.S. Pat. No. 3,025,526 discloses a kneeling device that attaches to a user's leg. It includes a kneepad that is attached to the user's knee by straps that are positioned below the knee and in the ankle region. When a user is in the standing position, the device unfolds and rests partially on the thigh. This device is bulky and restricts a user's movements while walking. Also, it is essentially a kneepad and does not take the weight off the user's knee.

U.S. Pat. No. 4,772,071 discloses a kneeling device that inlcudes a kneepad attached to a seat. The device is attached to the lower leg. The device is, however, bulky and must be removed when the user wants to stand or walk because it hampers movement.

In U.S. Pat. No. 5,865,507, a rectangular base has a seat and a pair of coextensive troughs with knee-wells located at the ends of the troughs. A user sits in the seat and places his legs in the troughs and his knees in the knee-wells. The device is also bulky and can only be used on unobstructed horizontal surfaces. Furthermore, it is not easily moveable, and every time a user wants to change his position, he must stand up and lift the device to move it. The device is heavy and can cause tripping because of its bulkiness.

U.S. Pat. No. 6,089,667 describes a motorized knee support device comprising a rigid plate that is covered with a pad. The plate is mounted on a base by a threaded post, and the height of the plate can be adjusted by a gear system. The device is relatively difficult to mount because it requires a person to stand in front of the unit, squat or kneel down, and then extend the leg back underneath the support. It is also not portable, but rather is freestanding, heavy, and bulky.

U.S. Pat. No. 5,577,800 discloses a work seat that is used while in a kneeling position. The device has a base with wheels, an adjustable seat, and a handle. The device allows the user, while kneeling, to support body weight primarily on the device rather than on the knees. The device, however, is bulky, heavy, and can only be used on unobstructed surfaces, thus there are many places where it cannot be used. Also, the wheels only move forward and backward. Thus the user must dismount when the device needs to be moved laterally.

In U.S. Pat. No. 5,380,021, a mobile knee support includes a pair of slings supported by a pair of casters. The slings support the knees of the user, and the casters allow for mobility. Since the user's weight is distributed on the knees, the device does not reduce forces on the internal knee and lower back. Also, the device does not reduce flexion in the knee joint. Since there are wheels, it can only be used on a relatively level, smooth, and unobstructed surface.

A sit-kneel chair is shown in U.S. Pat. No. 4,589,699. The chair has a seat portion and a knee support which are designed primarily to relieve tension of the lower back. Since the user sits in an upright position, the device is not suitable for use when kneeling close to the ground.

U.S. Pat. No. 4,377,309 discloses another support device having a seat attached to a base, for supporting the user in a sitting-kneeling position.

Balans Produkter AB produces a device under the trademark Balans Snap Sit, which includes a knee-well attached to a seat. The device does not fold while attached to the leg, and it is bulky and restricts movement while walking. It is also flammable, not sufficiently durable for regular use by workers in heavy industry, and has knee-wells that can gather materials, such as weld slag.

There is thus a need for a device that relieves pressure from the knees while kneeling, is easily portable, is attachable to the body, and can be moved automatically by the user without the user having to pick up the device and manually move it to a new position. There is also independently a need for a device that that is nonflammable and durable, so that it can be used in heavy industry and can be used on horizontally constrained and uneven surfaces. It would also be helpful to provide such a device that is comfortable to use while kneeling.

SUMMARY

A wearable knee support device for relieving pressure on a user's knee is disclosed. The device includes a body adapted to receive the leg of a user. A seat member is pivotally connected to the body and adapted to receive the weight of the user. A base member is also pivotally connected to the body and adapted to support the device in an unfolded position. At least one linking member connects the seat member and the base member. Moving either the seat member or the base member causes the linking member to rotate both the seat member and the base member from a folded position adjacent the leg of the user to an unfolded position. The base member can then rest on a horizontal surface and the seat member can support the user's weight.

In some embodiments, this kneeling device reduces the amount of flexion in the knee joint and the amount of contact stress applied to the facet of the knee joint, to reduce forces on the internal knee and lower back.

BRIEF DESCRIPTION OF THE FIGURES

FIG. **1** is a perspective view of a wearable kneel-sit support device according to one embodiment shown in the folded position with part of the leg of the seat member cut away for a better view of the body of the device.

FIG. **2** is a view of the device of FIG. **1** in the folded position attached to the lower leg of a user.

FIG. **3** is a view of the device in the unfolded position when the user is kneeling and placing his weight on the seat member.

FIG. **4** is a front view of the device in the unfolded position.

FIG. **5** is a back view of the device in the unfolded position with part of the body cut away to show the positioning of the attachment member within the body.

FIG. **6** is a schematic side view of the device in the folded position attached to the lower leg of a user, with the positioning of the device in the unfolded position shown in dashed lines.

FIG. **7** is a schematic side view of the device in the unfolded position shown attached to the lower leg of a user when the user is in a kneeling position, with the device in the folded position shown in dashed lines.

FIG. **8** is a perspective view of another embodiment of a wearable kneel-sit support device shown in the unfolded position.

DETAILED DESCRIPTION

Referring to the drawings, the wearable kneel-sit support device **10** includes a U-shaped body **12** adapted to receive the leg **14** of a user. As illustrated in FIG. **1**, body **12** has a closed end **16** and an open end **18** joined by a pair of side members **20***a*, **20***b*. In the particularly disclosed embodiment, a seat includes two separate seat members **22***a*, **22***b* each of which is pivotally attached to the body **12** adjacent the body's open end **18**. The seat is adapted to provide a support surface on which the user can sit when the device is in the unfolded position, as shown particularly in FIGS. **3** and **7**. Although the seat is illustrated as having two distinct support members **22***a*, **22***b* that are spaced to support each buttock, the seat can also be a single member that is wide enough to provide a seat surface.

As shown particularly in FIG. **3**, base member **24** is pivotally attached to the body **12** adjacent the closed end **16** to support the device and the user when the device is in the unfolded position. Linking members **26***a*, **26***b* (FIGS. **2** and **3**) link the seat members **22***a*, **22***b* to the base member **24**, whereby movement of either the seat members **22***a*, **22***b* or the base member **24** rotates both the base and the seat from the folded position of FIGS. **1**, **2**, and **6**, to the unfolded position.

The U-shaped body **12** includes the pair of parallel side members **20***a* and **20***b*, which have rounded ends **28***a*, **28***b*, **30***a*, and **30***b* (FIGS. **1** and **2**) that avoid sharp corners. As shown particularly in FIG. **2**, the ends **28***a* and **28***b* extend beyond the closed end **16** to provide a hollow recessed space **32**. The parallel sides **20***a* and **20***b* and the closed end **16** define the U-shaped body **12**, which for example is made of aluminum or plastic. As shown in FIG. **4**, the body **12** has an inside surface **34***a*, **34***b* and **34***c*. In the illustrated embodiment, padding **36** (FIGS. **3** and **4**) is desirably added to the inside surface **34***c* to enhance comfort when the device is secured to the leg. The padding **36** may, for example, be flame retardant (such as viscoelastic dip or leather covered foam). The U-shaped body **12** supports the seat member **22** and the base member **24**, and connects the device **10** to the lower leg **14** of the user.

The seat members **22***a*, **22***b* are respectively attached to a first pair of legs **38***a* and **38***b* (FIGS. **3** and **4**). The legs **38***a* and **38***b* are pivotally attached to the U-shaped body **12** adjacent the open end **18**. The first leg **38***a* is pivotally connected to the first side **20***a* of the U-shaped body **12** at a position **42***a* that is intermediate its distal and proximal ends **44***a* and **46***a*. Leg **38***a* is connected by means of a securing member **48***a* that is held in place by a nut (not shown) attached to its back. In the illustrated example, the securing

members are shoulder bolts secured with washers and nuts. Similarly, the second leg **38***b* is pivotally attached to the second side **20***b* of the U-shaped body **12** at a position **42***b* that is intermediate its distal and proximal ends **44***b* and **46***b*. Leg **38***b* is connected by means of a securing member **48***b*.

The first and the second legs **38***a* and **38***b* support, at their distal ends **44***a* and **44***b*, the first and second seats members **22***a* and **22***b*. The legs **38***a* and **38***b* can be welded to the seats **22***a* and **22***b*, or they can be formed as a single piece. The first and second seat members **22***a* and **22***b* are shown as being generally oval shaped in the illustrated example. Holes **50** are made in the seats members **22***a* and **22***b* and the pair of legs **38***a* and **38***b* in order to lighten the device **10**. The seat member **22** can be made from aluminum or reinforced plastic. The first and second seats **22***a* and **22***b* are padded at **52** to increase the comfort of the user when he places his weight on them.

The base member **24** is comprised of a second pair of legs **54***a* and **54***b* attached to a generally horseshoe shaped base **56**. See FIGS. **1** and **4**. The legs **54***a* and **54***b* can be welded to the base **56**, or they can be formed as a single piece. The base member **24** is pivotally attached to the U-shaped body **12** adjacent the closed end **16**. The first leg **54***a* is pivotally attached at its proximal end **58***a* to the first side **20***a* of the U-shaped body **12**. Leg **54***a* is connected by means of a securing member **60***a*. As shown in FIG. **4**, the second leg **54***b* is pivotally attached at its proximal end **58***b* to the second side **20***b* of the U-shaped body **12**. Leg **54***b* is connected by means of a securing member **60***b*.

The first and the second legs **54***a* and **54***b* are attached at their distal ends **61***a* and **61***b*, respectively, to the base **56**. See FIG. **4**. The base **56** has an underside **57** that rests on a surface when the device **10** is in the unfolded position. Holes **50** are made in the base **56** in order to lighten the device **10**. The pair of legs **54***a* and **54***b* and the base **56** are comprised of aluminum or reinforced plastic. The base **56** is padded at **62** in order to add comfort. See FIGS. **1** and **2**.

First and second linking members **26***a* and **26***b* link the pair of legs **38***a* and **38***b* of the seat member **22** to the pair of legs **54***a* and **54***b* of the base member **24**. See FIG. **1**. The first linking member **26***a* is attached at a first end **64***a* to the proximal end **46***a* of the first leg **38***a* of the seat member **22**. The first linking member **26***a* is attached at a second end **66***a* to the first leg **54***a* of the base member **24** at a position **68***a* intermediate its distal end **61***a* and proximal end **58***a*. See FIGS. **4** and **5**. Securing members **72***a* and **74***a* connect the first linking member **26***a* to the first leg **38***a* of the seat member **22** and the first leg **54***a* of the base member **24**. The first linking member **26***a* is formed as a flat bar with a raised segment having upward slopes **76***a* and **78***a* that form a ridge **80***a* near the second end **66***a*. Referring to FIG. **4**, the side **82***a* of the first linking member **26***a* directly opposite the ridge **80***a* forms a hollow recess **84***a*.

Similarly, the second linking member **26***b* is attached at a first end **64***b* to the proximal end **46***b* of the second leg **38***b* of the seat member **22**. The second linking member **26***b* is attached at a second end **66***b* to the second leg **54***b* of the base member **24** at a position **68***b* intermediate its distal and proximal ends **61***b* and **58***b*, as shown in FIGS. **4** and **5**. The second linking member **26***b* is formed as a flat bar with a raised segment having upward slopes **76***b* and **78***b* that form a ridge **80***b* near the second end **66***b*. The side **82***b* of the second linking member **26***b* directly opposite the ridge **80***b* forms a hollow recess **84***b*. Securing members **72***b* and **74***b* connect the second linking member **26***b* to the second leg **38***b* of the seat member **22** and the second leg **54***b* of the base member **24**. The linking members **26***a* and **26***b* connect the legs **38***a* and **38***b* of the seat member **22** to the legs **54***a* and **54***b* of the base member **24**, so that pivoting of either the seat member **22** or the base member **24** causes them both to pivot.

Referring to FIG. **2**, an attachment member **86** is used to attach the device **10** to the leg **14** of a user. As shown in the embodiment illustrated in FIG. **5**, the attachment member **86** passes through an opening **88***a* in the inside surface **34***a* of the first side **20***a* of the body **12**, into the hollow recessed space **32**, seats on a front surface **94** of the recessed space **32**, and exits from an opening **88***b* in the inside surface **34***b* of the second side **20***b* of the body **12**. The attachment member **86** is shown in the illustrated embodiment as being a strap having Velcro® portions **90***a* and **90***b* at ends **92***a* and **92***b*. The ends **92***a* and **92***b* of the attachment member **86** can be opened and closed when the user wants to insert or remove his lower leg **14**.

The device **10** is shown in the unfolded position in FIGS. **3**–**5**. To move from the folded position of FIG. **2** to the unfolded position of FIG. **3**, the seat members **22***a*, **22***b* and the base member **24** are pivoted away from each other until the U-shaped body **12**, the first pair of legs **38***a* and **38***b*, and the second pair of legs **54***a* and **54***b* are in a generally parallel configuration. The first and second seats **22***a* and **22***b*, and the base **56** are generally perpendicular to the U-shaped body **12**. In this configuration, as shown in FIG. **4**, the securing members **60***a* and **60***b* that connect the second pair of legs **54***a* and **54***b* to the U-shaped body **12** fit within recesses **84***a* and **84***b* to prevent interference with the movement of the linking members **26***a* and **26***b*.

Referring to FIG. **5**, a first position stop **96***a* is attached to first side **20***a* of the U-shaped body **12**, and a second position stop **96***b* is attached to the second side **20***b* of the U-shaped body **12**. When the device **10** is in the unfolded position, the proximal ends **46***a* and **46***b* of the first pair of legs **38***a* and **38***b* of the seat member **22** abut the position stops **96***a* and **96***b*. The position stops **96***a* and **96***b* determine the pivoting limit of the first pair of legs **38***a* and **38***b* of the device **10** to achieve the unfolded position. In addition, the inside surfaces of the hollow recesses **84***a* and **84***b* (FIG. **4**) contact the securing members **60***a* and **60***b*, thus also acting as a stop to prevent further motion of the U-shaped body **12**.

In use, as shown in FIGS. **1** and **2**, the seat member **22** and the base member **24** are pivoted upward so that the device **10** is in the folded position. The seats **22***a* and **22***b*, and the base **56** are folded over the U-shaped body. The device **10** is positioned so that the closed end **16** is in front. The user opens the attachment member **86** by unfastening the Velcro® straps **90***a* and **90***b*, and places the lower leg **14** through the open end **18** of the U-shaped body **12**, until the device abuts against the shin of the wearer. The attachment member **86** is closed by attaching the opposed ends **92***a* and **92***b* of the Velcro® straps. The device **10** is retained on the lower leg **14** of the user, with the base member **24** in the front, and the seat member **22** is behind the leg, as illustrated in FIG. **2**.

Since the device **10** is compact and relatively lightweight, the user can walk with the device **10** conveniently attached to the lower leg **14**. When the user wants to kneel, an optional kneepad **100** (FIG. **3**) may be attached to the knee onto which the user plans to kneel. Referring to FIG. **3**, when the user wants to kneel, the device **10** is pivoted to an unfolded position while it is still attached to the leg **14**. For the device to assume the unfolded position, the user pivots the seat members **22***a*, **22***b* and the base member **24** away from the U-shaped body. The seat members **22***a*, **22***b* are pivoted upward and the base member **24** downward until the

U-shaped body **12**, the first pair of legs **38***a* and **38***b*, and the second pair of legs **54***a* and **54***b* are in a generally parallel configuration. At the same time, the user lifts the heel from the ground, while the leg **14** is still in the device **10**, and kneels with the foot behind the body so that the toes, which are pointed downwards, rest on the ground. In this position, the underside **57** of the base **56** rests on the ground, the other foot remains forward of the user's body.

In this orientation, the base **56** and the generally oval shaped seats **22***a* and **22***b* are substantially perpendicular to the U-shaped body **12**, and the buttocks are supported by seat members **22***a* and **22***b*, so that the user's weight is partially on the kneepad **100** and partially on the seats **22***a* and **22***b*, thus relieving pressure on the knee. When the user wants to move or rise from the kneeling position, he stands up and pivots the seat member **22** and the base member **24** into the body **12** as illustrated by the dashed lines in FIG. **7**. The user can then ambulate with the device **10** attached to the leg **14**. The device **10** can be used on either leg at the convenience of the user, and is capable of conveniently being changed from one leg to the other as desired to reduce fatigue on a particular leg.

Referring now to FIG. **8**, there is shown a wearable kneel-sit support device **110** according to another embodiment. The components of the embodiment of FIG. **8** that are identical to the corresponding components of the embodiment of FIGS. **1–7** are given the same respective reference numerals and are not described further. As shown in FIG. **8**, the device **110** includes first and second attachment members **86** and **86'**, respectively, rather than one attachment member **86** as in the device **10** of FIGS. **1–7**. Each attachment member **86**, **86'** includes respective first and second end portions **92***a*, **92***b* and **92***a'*, **92***b'*, respectively. The first end portions **92***a*, **92***a'* are configured to be attachable to the corresponding second end portions **92***b*, **92***b'* (e.g., using Velcro®) for securing the leg of a user inside the device **110**.

The attachment members **86**, **86'** in the illustrated configuration are coupled to each of the first and second side members **20***a*, **20***b*, respectively, using respective brackets **112**. The brackets **112** can be secured to the first and second side members **20***a*, **20***b* in a conventional manner, such as with the illustrated screws **114**. Although not shown in the drawings, the brackets **112** also can be implemented in the embodiment of FIGS. **1–7** for coupling the attachment member **86** to the first and second side members **20***a*, **20***b* of the device **10**.

Although the present disclosure has been described in considerable detail with reference to the drawings herein, other embodiments are possible. For example, the body **12**, in the illustrated example is U-shaped, but other shapes can also be employed. Although the seats **22***a* and **22***b* are shown as being oval, they can have other shapes, such as round, square, rectangular or other configurations. A single seat can also be used, for example a single support spanning both buttocks or a single seat member that supports only one of the buttocks. In the illustrated example, holes **50** are made in the device **10** in order to lighten it, but the device can be made without the holes. The securing members in the illustrated example are shown as being shoulder bolts, but other securing members can be use such as pins and other fasteners.

The base **56** is shown in FIG. **1** as being substantially horseshoe shaped, but other shapes can also be used. Instead of padding, the seat member **22**, the base member **24**, and the body **12** can for example be coated with a soft plastic. As would be appreciated by one of ordinary skill in the art, other materials besides aluminum and reinforced plastic can be used to make the device **10**. Also, other attachment members **86** can be used, such as buckles or snaps. Therefore, the spirit and scope of the appended claims should not be limited to the descriptions of the embodiments contained herein.

We claim:

1. A wearable knee support device for relieving pressure from a user's knee, the device comprising:

a body adapted to receive the leg of a user;

a seat member connected to the body and adapted to support at least one buttock of the user;

a base member connected to the body and adapted to support the device, the base and the seat member being on opposite sides of the user's leg when the device is being worn on the leg; and

at least one linking member connecting the seat member and the base member and whereby moving one of the seat member and the base member causes the seat member and the base member to rotate relative to each other and the body from a folded position adjacent the leg of the user to an unfolded position, wherein the base member can rest on a horizontal surface and the seat member can support the user's weight.

2. The device of claim **1** further comprising a stop attached to the body adjacent the seat member, the stop being configured to prevent pivoting of the seat member and the base member past the unfolded position.

3. The device of claim **1**, wherein when the seat member and the base member are in the folded position while the device is being worn by the user, the seat member and the base member reside above the body of the device, and when the seat member and the base member are in the unfolded position while the device is being worn by the user, the base member resides below the body and directly underneath the seat member.

4. The device of claim **1**, wherein the body comprises sides aligned in a parallel configuration, a closed end extending between the sides, and an open end disposed opposite the closed end, the open end adapted to receive the leg of the user.

5. The device of claim **4**, wherein the sides of the body and the closed end of the body define an inside surface, and an attachment member extends from the inside surface, the attachment member being capable of attaching the lower leg of the user to the body.

6. The device of claim **4**, wherein the body has an inside surface and the seat member and the inside surface of the body are padded to protect the user's lower leg.

7. The device of claim **4**, wherein the base member comprises a base attached to a pair of legs, the pair of legs attached, respectively, to each of the sides of the body.

8. A method of protecting a knee while kneeling on a surface, comprising:

securing the device of claim **1** to a leg of a subject;

kneeling with the base member on the surface, and the seat member in the unfolded position; and

resting the body against the seat member.

9. The method of claim **8**, further comprising placing a knee pad on a knee of the subject.

10. The method of claim **8**, further comprising rising from a kneeling position, and pivoting the seat member and the base member toward one another to hold the device compactly against the leg while the subject walks.

11. The method of claim **8**, wherein the device is secured to the lower leg.

12. A method of protecting a knee while kneeling on a surface, comprising:

securing the device of claim **1** to a leg of a subject;

unfolding the device; and

kneeling with the base member on the surface and the seat member supporting at least one buttock of the subject.

13. A wearable knee support device for relieving pressure from a user's knee, the device comprising:

a body having sides aligned in a substantially parallel configuration, the body comprising a closed end extending between the sides, and an open end disposed opposite the closed end, the body being adapted to receive the lower leg of a user;

a seat member pivotally attached to the sides of the body adjacent the open end, the seat member being capable of supporting the user's weight;

a base member pivotally attached to the sides of the body adjacent the closed end, the base member providing support for the device when the user's weight is placed on the seat member; and

at least one linking member pivotally connected to the seat member and the base member, whereby pivoting of one of the seat member and the base member causes the linking member to move the seat member and the base member so that the device changes from a folded position wherein the seat member and the base member are folded inwardly towards the body, the device being adapted to the attached to the user's leg while the user is standing, to an unfolded position wherein the base member is adapted to rest on a surface and the seat member is configured to receive the user's weight.

14. The device of claim **13**, wherein the seat member comprises a first seat and a second seat supported, respectively, by a pair of legs, the pair of legs being attached, respectively, to the sides of the body adjacent to the open end.

15. The device of claim **13**, wherein the base member comprises a base attached to a pair of legs, the pair of legs being attached, respectively, to the sides of the body adjacent the closed end.

16. The device of claim **13**, further comprising a stop attached to the body adjacent the seat member, the stop being configured to prevent pivoting of the seat member and the base member past the unfolded position.

17. A wearable knee support device for relieving pressure from a user's knee, the device comprising:

a generally U-shaped body having sides aligned in a substantially parallel configuration, the body comprising a closed end extending between the sides, and an open end located opposite the closed end and adapted to receive the lower leg of a user;

a first pair of legs pivotally attached, respectively, intermediate their proximal and distal ends to the sides of the body adjacent the open end thereof;

a seat supported by the distal ends of the first pair of legs, the seat being capable of supporting the user's weight;

a second pair of legs pivotally attached, respectively, at their proximal ends to the sides of the body adjacent the closed end thereof;

a base attached to the distal ends of the second pair of legs, the base providing support for the body when the user's weight is placed on the seat; and

a pair of linking members pivotally connected to the proximal ends of the first pair of legs and intermediate the proximal and distal ends of the second pair of legs, respectively, whereby pivoting of one of the seat and the base causes the linking members to rotate the seat and the base from a first folded position wherein the first and the second pairs of legs are folded inwards toward the body to a second unfolded position wherein the first pair of legs, the second pair of legs, and the body are aligned in a generally parallel relationship, the seat and the base being generally perpendicular to the body, the base being adapted to rest on a surface and the seat being adapted to receive the user's weight.

18. The device of claim **17**, further comprising a pair of stops attached, respectively, to each of the sides of the body and adapted to engage the linking members, the stops limiting the rotating of the seat and the base to achieve the second unfolded position.

19. A wearable knee support device for relieving pressure from a user's knee, the device comprising:

a body adapted to receive the leg of a user;

a seat member connected to the body and adapted to receive the weight of a user;

a base member connected to the body and adapted to support the device; and

at least one linking member connecting the seat member and the base member and whereby moving one of the seat member and the base member causes the seat member and the base member to rotate from a folded position adjacent the leg of the user to an unfolded position, wherein the base member can rest on a horizontal surface and the seat member can support the user's weight;

wherein the seat member comprises a first seat and a second seat supported by a pair of legs, respectively, the pair of legs attached, respectively, to each of the sides of the body.

20. A wearable knee support device for relieving pressure from a user's knee, the device being changeable from a folded position, wherein the device is attached to the lower leg of the user, to an unfolded position wherein the device is adaptable to rest on a surface and support the weight of the user, the device comprising:

a body having an opening adapted to receive the leg of a user;

a seat member pivotally attached to the body adjacent one end, the seat member being adapted to support weight of the user when the device is in the unfolded position; and

a base member pivotally attached to the body adjacent the other end, the base member being adapted to support the device when the device is in the unfolded position; and

a linking member linking the seat member to the base member, whereby movement of one of the seat member and the base member rotates the seat member and the base member from the folded position to the unfolded position.

21. The device of claim **20**, wherein the seat member comprises a first seat and a second seat supported by a pair of legs, respectively, the pair of legs being attached to the body adjacent the one end.

22. The device of claim **20**, wherein the base member comprises a base attached to a pair of legs, the pair of legs being attached to the body adjacent the other end.

23. The device of claim **20**, further comprising an attachment member extending from the body, the attachment member being capable of attaching the lower leg of the user to the body.

24. The device of claim **20**, further comprising a stop attached to the body adjacent the seat member, the stop being configured to prevent pivoting of the seat member and the base member past the unfolded position.

* * * * *