RI 9305

RI 9305

REPORT OF INVESTIGATIONS/1990

PLEASE DO NOT REMOVE FROM LIBRARY

Rapid Response Pneumatic Fire Detection for Multilevel Metal Mines: System Design and In-Mine Testing

By W. H. Pomroy, R. E. Griffin, and M. A. Ackerson

1910 ★ 80 YEARS ★ 1990

BUREAU OF MINES

UNITED STATES DEPARTMENT OF THE INTERIOR

U.S. Bureau of Mines
Center
Ave.
LIBRARY

Mission: As the Nation's principal conservation agency, the Department of the Interior has responsibility for most of our nationally-owned public lands and natural and cultural resources. This includes fostering wise use of our land and water resources, protecting our fish and wildlife, preserving the environmental and cultural values of our national parks and historical places, and providing for the enjoyment of life through outdoor recreation. The Department assesses our energy and mineral resources and works to assure that their development is in the best interests of all our people. The Department also promotes the goals of the Take Pride in America campaign by encouraging stewardship and citizen responsibility for the public lands and promoting citizen participation in their care. The Department also has a major responsibility for American Indian reservation communities and for people who live in Island Territories under U.S. Administration.

Report of Investigations 9305

Rapid Response Pneumatic Fire Detection for Multilevel Metal Mines: System Design and In-Mine Testing

By W. H. Pomroy, R. E. Griffin, and M. A. Ackerson

UNITED STATES DEPARTMENT OF THE INTERIOR
Manuel Lujan, Jr., Secretary

BUREAU OF MINES
T S Ary, Director

Library of Congress Cataloging in Publication Data:

Pomroy, William H.

Rapid response pneumatic fire detection for multilevel metal mines : system design and in-mine testing / by William H. Pomroy, Russell E. Griffin, and Mark A. Ackerson.

p. cm. -- (Report of investigations; 9305)

Includes bibliographical references.

Supt. of Docs. no.: I 28.23:9305.

1. Mine fires--Prevention and control. 2. Fire detectors. I. Griffin, Russell E. II. Ackerson, Mark A. III. Title. IV. Series: Report of investigations (United States. Bureau of Mines); 9305.

TN23.U43 [TN315] 622 s--dc20 [622'.8] 89-600363 CIP

CONTENTS

	Page
Abstract	1
Introduction	2
Acknowledgments	2
System design criteria	4
Reliability	4
Maintainability	4
System response time	4
Measurement sensitivity and accuracy	4
Cost	4
Description of prototype pneumatic detection system	5
Air-sampling subsystem	5
Gas analysis subsystem	6
System control	7
In-mine test	8
Description of test site	8
Installation of prototype equipment	9
System performance	11
Maintenance and reliability	14
System costs	14
Summary and conclusions	15
References	16

ILLUSTRATIONS

1.	Water trap	6
2.	Schematic of major components of pneumatic fire detection system	8
3.	Control room for pneumatic fire detection system	10
4.	Mine cross section showing layout of main tube bundle	10
5.	Splicing main tube bundle during installation of pneumatic fire detection system	10
6.	Routing of main bundles through pipe in narrow drifts	11
7.	Elevated CO and CO_2 levels following end-of-shift blasting	12
8.	Calibration gasbag connected to sample tube	12
9.	Water traps installed in main tube bundle	13

TABLES

1.	Comparison of fire detection systems using pneumatic tube bundle and electronic telemetry	3
2.	Summary of results of travel time and dilution tests	13
3.	Estimated cost of prototype pneumatic detection system, including hardware, software, and installation	14
4.	Estimated cost of electronic telemetry fire detection system, including hardware, software, and installation	15

UNIT OF MEASURE ABBREVIATIONS USED IN THIS REPORT

atm	atmosphere	pct	percent
cfm	cubic foot per minute	ppm	part per million
ft	foot	psi	pound per square inch
h	hour	s	second
in	inch	st	short ton
Kb	kilobyte (1,024 bytes)	V	volt
min	minute		

RAPID RESPONSE PNEUMATIC FIRE DETECTION FOR MULTILEVEL METAL MINES: SYSTEM DESIGN AND IN-MINE TESTING

By W. H. Pomroy,[1] R. E. Griffin,[2] and M. A. Ackerson[2]

ABSTRACT

This report describes research by the U.S. Bureau of Mines to design and in-mine test a rapid response pneumatic fire detection system for multilevel metal mines. The relative merits of pneumatic detection are discussed in the context of typical multilevel mine layouts and environments. The Bureau's prototype system is described, with emphasis on design features that counter commonly experienced and/or perceived operating problems with pneumatic detection systems. Finally, the results of a 3-year in-mine performance evaluation of the prototype system are discussed.

[1]Group supervisor.
[2]Electronics engineer.
Twin Cities Research Center, U.S. Bureau of Mines, Minneapolis, MN.

INTRODUCTION

Underground mine fires are a serious hazard to life and property. During the 22-year period 1965-86, 200 fires in underground metal and nonmetal mines were reported to Federal mine safety authorities in the United States (*1-2*).[3] These fires accounted for 120 fatalities (*3*). It is estimated that over 650 additional fires occurred that were nonreportable (lasting less than 30 min and causing no injuries) (*3*). Countless millions of dollars were spent on rescue and recovery efforts, equipment repair and replacement, and mine rehabilitation. In addition, mines idled by fires were forced to forego hundreds of millions of tons of mineral production.

Contaminated air is the primary life safety hazard in an underground fire, accounting for about three-fourths of all underground noncoal mine fire deaths since 1945 (*4*). Air becomes contaminated because mine ventilation systems, which are designed to supply fresh air to the workings, distribute smoke and toxic fire gases with equal efficiency. Since contaminated air is spread so quickly, it is essential that the mine's emergency plan be initiated as soon as possible after a fire starts. Since 1950, 73 pct of all fires detected within 15 min have resulted in slight or no damage to the mine (*3*). However, the elapsed time between ignition and activation of the emergency plan is often excessive. Since 1968, only about 40 pct of fires have been detected within 15 min of ignition, and most of those were fires on attended equipment or minor welding fires (*3*). Effective, reliable fire detection systems, capable of continuously monitoring mine air and sensing fires in their early or even incipient stages, can significantly improve mine safety by ensuring adequate time for mine personnel to initiate and follow appropriate emergency procedures.

Two basic fire detection system configurations have been used successfully in underground mines: the pneumatic "tube bundle" approach and the fully electronic telemetry approach. Pneumatic detection involves sampling the mine atmosphere through a network of plastic tubes, which terminate at a central analytic station equipped for gas monitoring. The electronic telemetry approach involves the placement of detection devices at each underground location to be monitored. Detector outputs are transmitted to a central control point over electronic telemetry lines. Such systems may consist of any number of detection devices, with one or more detectors installed at each monitoring point.

Although pneumatic detection systems have been used in above-ground occupancies for many years (factories, ocean vessels, parking garages, etc.), their use in underground mines is fairly recent. Practical, mine-worthy pneumatic detection systems were developed about 20 years ago in the United Kingdom for the detection of slowly developing spontaneous combustion fires in coal mines (*5*). Early successes led to a proliferation of systems in the mid- to late 1970's, both in the United Kingdom and elsewhere (*6-10*). Despite the advent of sophisticated digital systems for mine production and environment monitoring and control, pneumatic fire detection is still relied upon in about two-thirds of United Kingdom coal mines (*11*). However, its use was, and continues to be, limited to detection of slowly developing spontaneous combustion in coal mines.

Table 1 summarizes some advantages and disadvantages of each approach. Although the pneumatic system possesses many positive features and was the subject of considerable research effort in the late 1970's (*12-15*), it was never widely accepted in North American coal mines, or in noncoal mines anywhere. With specific respect to noncoal mines, the pneumatic system would appear to offer significant cost, performance, and reliability advantages over electronic telemetry systems. Although no specific rationale for the lack of acceptance has been documented, anecdotal evidence suggests that pervasive, yet mistaken notions regarding performance limitations, particularly system response time and overall reliability, are the principal reasons. These mistaken notions are artifacts of early system designs that, as a result of subsequent research and testing, have largely been corrected.

In 1983, as part of its health and safety program, the U.S. Bureau of Mines initiated research to design and in-mine test a rapid response pneumatic fire detection system tailored to the unique requirements of multilevel metal mines. The objective of the program was to assess the overall technologic and economic feasibility of utilizing the pneumatic approach to provide mine-wide fire detection coverage in a typically configured multilevel metal mine. This report discusses the design of a pneumatic detection system for multilevel metal mines and the results of a 3-year in-mine performance evaluation of the prototype system.

ACKNOWLEDGMENTS

The authors wish to thank Charles Hays, safety director, Carl Onder, safety director, and Robert Metzger, general manager, the Zinc Corp. of America, for their help during the installation and subsequent performance evaluations of prototype equipment. The authors also wish to thank Steven Ouderkirk, formerly a mining engineer at Twin Cities Research Center, for his efforts in designing and assisting in the in-mine installation of the detection system.

[3]Italic numbers in parentheses refer to items in the list of references at the end of this report.

Table 1.–Comparison of fire detection systems using pneumatic tube bundle and electronic telemetry

	Pneumatic tube bundle	Electronic telemetry
Maintenance	Access is simple for analyzers, pumps, controls, etc. because all electronics and mechanical components can be located on surface. Plugs or breaks in sample tubes can be difficult to locate and repair.	Access to some underground locations for maintenance, calibration and/or repair of equipment can be a problem. Troubleshooting telemetry lines (opens, faults, etc.) is generally easier than troubleshooting sample tubes (plugs or breaks).
Area of coverage	In large, spreadout mines, the time required for a sample to travel the entire length of a sample tube can be a limiting factor; e.g., a 3/8-in sample tube 10,000 ft in length will result in a tube travel time of about 17 min.	Very long transmission distances (5 to 15 miles) may require special telemetry provision.
Cost	In general, the larger the system (i.e., number of sampling points), the lower the cost per sampling point because only 1 analytic station is required. Likewise, however, small systems have a relatively high cost per sample point.	Since each sampling point requires full complement of detection instruments, system costs increase in proportion to the number of sampling points. Telemetry line acquisition and installation costs are generally lower than for tube bundles servicing the same number of sampling points, especially if multiplex data transmission is employed.
Measurement precision and reliability.	Because the analytic station can be on surface in a relatively clean environment, high-precision detection instruments can be utilized. Also, in that location, detector maintenance and calibration are likely to be frequent.	Measurement precision and reliability are directly proportional to the adequacy of detector maintenance and calibration. Where accessibility is difficult, measurement precision and reliability may be low.
Need for electric power	Since all electronic equipment can be on surface, electric power is not required at each sampling point–a definite advantage if underground power is lost during a mine emergency.	In general, electric power is required at each sampling point; however, some detectors can be powered through the telemetry lines (i.e., from surface).
Products of combustion that can be detected.	Most gases, including O_2, CO, and CO_2, can be accurately measured. Smoke particles tend to diffuse into the tube; thus, depending on tube length, diameter, sample air velocity, and other factors, smoke detection may or may not be possible for a given application. Some gases, such as NO_x and SO_2, react with the tube or the water that may collect in the tube, producing erroneous readings. Measurements of air velocity, direction, and temperature at the sampling point are impossible.	Any gas, particulate, or condition (air velocity, direction, temperature, etc.) for which a detection instrument exists can be measured.
Environmental exposure factors	Analytic station can be located in a clean environment. Tubes are subject to plugging from dust accumulation and condensation of humid sample air. Freezing conditions further exacerbate humidity and condensation problems. Broken lines may result from abrasion, cuts, roof falls, etc.	Ruggedness and resistance to harsh environmental effects (heat, humidity, cold, dust, diesel exhaust, blast fumes, etc.) are essential for detection instruments. Both detection instruments and telemetry lines may be affected by electromagnetic interference from nearby power lines and other sources. Broken telemetry lines may result from roof falls, etc.; however, redundant telemetry lines, telemetry loop configurations, etc., can be employed to improve telemetry reliability. Input voltage fluctuations and electrical transients (voltage spikes) can also be expected underground.

SYSTEM DESIGN CRITERIA

The prototype pneumatic detection system was designed to satisfy five primary design criteria addressing reliability, maintainability, system response time, measurement sensitivity and accuracy, and cost. These criteria are discussed in the following sections.

RELIABILITY

Fire detection system reliability is critical. Unwarranted alarms (false positives) tend to undercut confidence in the system to the extent that alarms resulting from actual fires may not be acted upon. Equally undesirable are missed alarms (false negatives) wherein the system fails to detect a fire. Reliability is the probability that a system will perform a stated function under specified conditions. The reliability of a system is the product of the reliability of each component making up the system. Thus, system reliability is maximized when the reliability of individual components is maximized and when the number of individual components is minimized. The conditions of environmental exposure under which the system must function are also of material significance to reliability. The mine environment is characterized by high humidity, a large range of ambient temperatures, dust, diesel exhaust, blasting fumes, and physical abuse from equipment movement and falls of ground. Each of these conditions must be considered and negated in the design of the system.

A very high level of monitoring system reliability is possible with pneumatic detection. Since all electrical components are centralized, they are generally enclosed in a separate housing or room provided for that purpose, offering a degree of protection from the harsh mine environment. Where the central analysis station is on surface, all electrical equipment is removed entirely from the dust, dampness, and temperature variations that are often the cause of breakdowns in totally electronic monitoring systems.

Since considerable discretion can be exercised in specifying the location for the central analytic station, management considerations such as accessibility are usually the primary factors in determining its location. And as is often the case at underground mines, equipment and facilities that are accessible receive proper inspection and maintenance, while those that are not easily accessible do not.

Finally, it should be noted that pneumatic detection systems can incorporate the same types of system failure alarms as fully electronic systems. Analogous to an electronic systems' fault detection circuits, which sense for broken or shorted telemetry lines, pneumatic detection systems can be provided with sensors that report broken or plugged sample tubes or other fault conditions.

MAINTAINABILITY

The reliability of a system is often determined by the adequacy of the maintenance it receives. The level of system maintenance received is, in turn, influenced by the nature and frequency of maintenance required and by the difficulties encountered in rendering maintenance service. As a result, the system must incorporate design features that minimize the frequency and complexity of maintenance, such as isolation from the harsh mine enviroment, built-in troubleshooting aids, self-diagnostics, and automatic calibration and parameter adjustment. In addition, key system components must be readily accessible to facilitate necessary maintenance interventions. Weekly visual checks of the control room, a 30-min functional check of the control system every 90 days, and a 2-h preventive maintenance routine annually were established as maintenance design goals.

SYSTEM RESPONSE TIME

As noted above, nearly three-fourths of fires detected within 15 min produced only slight or no damage to the mine. Hence, the system response time design goal was established as 15 min. Note that this design goal refers to the time required to issue an alarm once the system has encountered contaminated air. The elapsed time from ignition until the mine's ventilation has carried the combustion products to the system are not included. However, careful layout of the system to achieve maximum mine coverage will minimize these delays.

MEASUREMENT SENSITIVITY AND ACCURACY

Accurate data regarding the presence and concentration of combustion products at key underground locations are essential. Even slight excursions from ambient levels of the target gases could portend a significant fire event. Thus, the detection instruments must be capable of reliably responding to the earliest precursor of fire. Goals for sensitivity and accuracy were established at 1 ppm for CO and 10 ppm for CO_2. These levels are appropriate to provide sufficient advance warning of a fire event for initiation of effective emergency operations.

COST

Since total system costs (hardware acquisition, installation, and long-term maintenance) are application specific, a design goal relating to an absolute cost figure for a system was not possible. However, as pneumatic detection applied to multilevel metal mines is essentially a new

technology, it is appropriate to index system costs relative to the status quo technology, namely, electronic telemetry. Therefore, the design goal for total cost of the pneumatic detection system was established as a level equal to or less than the cost of an electronic telemetry system with roughly equivalent detection capabilities.

DESCRIPTION OF PROTOTYPE PNEUMATIC DETECTION SYSTEM

The prototype pneumatic detection system consisted of three primary subsystems: air sampling, gas analysis, and system control. Each subsystem is described in the following sections. Where appropriate, aspects of the system that satisfy a particular system design criterion are highlighted.

AIR-SAMPLING SUBSYSTEM

The air-sampling subsystem is required to draw samples of the mine atmosphere from various underground locations through plastic tubes to an analytic station where the presence and level of combustion gases can be determined. Vacuum pumps were provided in the analytic station for this purpose. All electrical and mechanical equipment would thus be centralized for ease of maintenance and removed from the harsh underground environment for improved performance. Polyethylene tubing was selected for its durability, flexibility, light weight, and low cost. A main bundle, consisting of the sample tubes surrounded by 1/2 in of thermal insulation and a tough outer neoprene jacket, was installed in the shaft, with individual tubes branching off on various levels to specific monitoring locations.

Tube and pump sizing is based on previous empirical studies by the Bureau (*16*). Because of limits on effective pumping, the relationship of tube length to tube diameter is as follows:

$$\frac{T}{4.78 \times 10^{-3} \times L} \geq D \geq 0.02\ L^{1/3},$$

where D = tube ID, in,

L = maximum tube length, ft (maximum length at test site is 4,000 ft),

and T = transit time, min (design goal for system response time is 15 min).

Solving for D produces the following:

$$0.78 \geq D \geq 0.34.$$

The smallest standard tube size that falls within this interval, 3/8 in (0.375 in), was selected for the prototype system. A wall thickness of 1/16 in was found to be sufficiently damage resistant, resulting in a tube OD of 1/2 in.

Since the cumulative effect of the flow restriction offered by the tube connectors could be quite large, connectors with the largest possible ID were used (0.3125 in). The connectors selected for the prototype system were brass compression-type fittings utilizing a replaceable nylon compression sleeve.

Water traps are required to prevent the accumulation of water in the sample lines, which could seriously impair sample flows. The accumulation of water would be particularly acute where warm, moist mine air is drawn through sample tubes that are routed in intake air near a mine opening or other area where the air temperature is below the dewpoint of the sample. Accumulated water could also freeze, further compounding the problem.

Standard water traps were modified for this system using a specially designed two-way check valve assembly. During normal operation (i.e., under vacuum), a vacuum check valve prevented air leakage into the water trap and, hence, dilution of the sample. To empty the traps, the system was periodically cycled into a pressure mode, wherein the entire tubing network was pressurized with compressed air. The water traps were equipped with float-type check valves that permitted accumulated water to be blown out by the compressed air pressure but then sealed against further pressure loss once the trap was empty (fig. 1). Laboratory testing of the modified water traps was performed prior to in-mine installation to ensure proper, maintenance-free operation.

Two vacuum pumps are required for system operation: a purge pump and a sample pump. The purge pump maintains a constant flow in the lines, exhausting to the atmosphere. The sample pump draws air samples from each line in sequence, exhausting to the detection instruments. Pumping requirements are defined by the tube dimensions, the number of tubes, and the desired tube transit time. Since flow-regulating valves were provided, each line's flow characteristic was nearly identical and roughly equivalent to that of the longest line (i.e., 4,000 ft). Thus, the pump requirements and tube dimensions are related as follows (*16*):

for the purge pump . . .

$$Q = \pi \times \frac{D^2}{576T} \times (n - 1) \times L,$$

for the sample pump . . .

$$Q = \pi \times \frac{D^2}{576T} \times L,$$

where n = number of tubes,

and Q = volumetric flow, cfm.

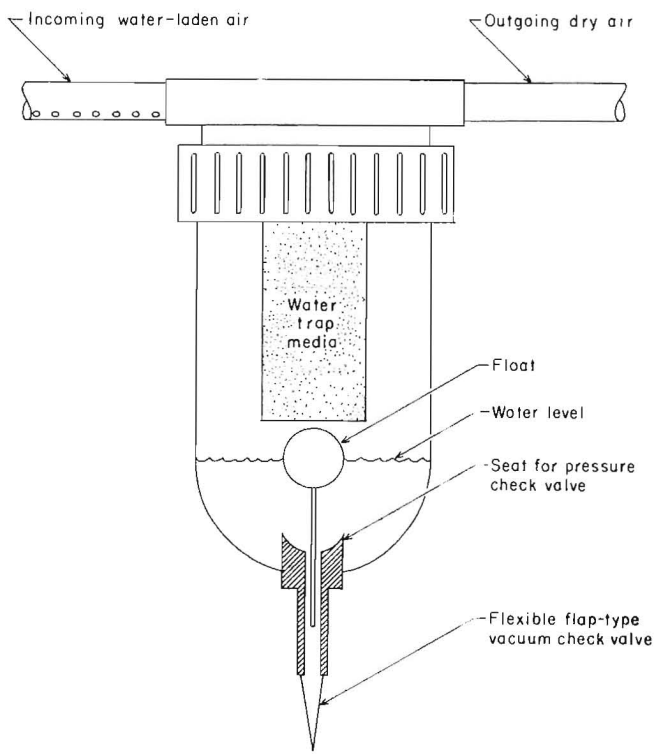

Figure 1.–Water trap

These formulas produce design values of 2.25 cfm for the purge pump and 0.20 cfm for the sample pump. The pumps must be capable of providing these flows at a specific vacuum. The vacuum required to produce the desired sample transit time is expressed as follows:

$$P = P(A) - P(P) = 2.37 \times 10^{-8} \times \frac{L^2}{D^2T},$$

where P = pressure drop over the lines, atm,

$P(A)$ = ambient pressure at inlet to tube (assume 1 atm),

and $p(p)$ = pressure at pump inlet, atm.

This formula produces an operating vacuum value of 0.18 atm. The pumps selected for the prototype system were rated at a vacuum of 0.25 atm and flows of 7.25 cfm and 1.75 cfm for the purge and sample pumps, respectively. Pump capacity in excess of design requirements was provided to compensate for otherwise unaccounted-for losses (tube connectors, water trap check valves, line leakage, etc.) and to allow for possible future expansion of the system (additional tubes, longer tubes, etc.).

Three-way, solenoid-operated valves having low flow resistance were installed in each line. The valves were sequentially cycled by the system control to direct sample gas from one line at a time to the sample pump and gas analyzers while the flow from the remaining 11 lines passed through the purge pump and was exhausted.

GAS ANALYSIS SUBSYSTEM

There exist four standard classifications of fire detectors (*17*):

1. Heat detectors respond to abnormally high temperatures or rates of temperature rise;
2. Flame detectors respond to the infrared, ultraviolet, or visible radiation produced by a fire;
3. Smoke detectors respond to the visible or invisible particles of combustion; and
4. Fire-gas detectors respond to the gases produced by a fire.

Heat and flame detectors are not practical for mine-wide fire detection coverage, as they must be physically close to (or in the case of flame detectors, within line-of-sight of) the point of origin of the fire. Smoke detection provides a means for early detection of incipient fire; however, smoke detection adds an additional constraint on the design of a pneumatic detection system. Smoke particles tend to diffuse into the walls of the tubes, resulting in the potential for grossly erroneous smoke measurements. Previous research has developed tube diameter-to-length ratio criteria for effective pneumatic smoke detection (*16*). For a tube length of 4,000 ft, however, tube diameters approaching 1 in would be required.

Typical mine combustibles such as wood, rubber, brattice, electrical insulation, etc., produce a variety of fire gases including CO, CO_2, NO_x (nitrogen oxides), HCN (hydrogen cyanide), NH_3 (ammonia), and many others. CO and CO_2 are produced in varying but sufficient quantities to be reliably detected. Although CO is not the most toxic of the fire gases, it is always one of the most abundant and, therefore, is considered the principal life safety threat in most fire atmospheres. CO is produced during the earliest stages of combustion and is an excellent early indicator of fire. It is also produced in large quantities in confined or smoldering fires, as is often the case underground. CO_2 is a product of complete combustion of carbonaceous material and is generally produced in large quantities during flaming combustion. It was determined that both CO and CO_2 detection should be incorporated into the prototype detection system. As noted above, although both gases are formed in most fires, one or the other gas would likely predominate, depending on the type of fire. Thus, analysis of the ratio of the two gases, along with other data such as the known combustibles in the vicinity of the fire and the ventilation through the fire zone, would enable a characterization of any fire that might occur. A system incorporating two detectors would also be inherently more reliable than one

utilizing a single detector, as the two detectors would provide a degree of redundancy.

A wide variety of CO and CO_2 detection instruments suitable for fire detection purposes are commercially available. Detectors based on the operating principle of nondispersive infrared (NDIR) absorption were selected for the prototype pneumatic detection system. Radiation from an infrared source is passed through a cell containing the sample of gas to be analyzed and is absorbed by the gas present. A filtered infrared detector responds to this change in radiation, and its output is compared with a reference cell, conditioned by suitable electronics, and read out on an appropriately marked meter. A stable reading is generally obtained in 2 to 5 s, followed by a rezero in 3 to 4 s.

NDIR detectors are quick and accurate, and sensitivity to 1 pct of full scale can be achieved. For CO, a detection range of 0 to 100 ppm is utilized, with the resulting sensitivity being 1 ppm (2 pct of the 50-ppm threshold limit value (TLV)). For CO_2, a detection range of 0 to 1,000 ppm is utilized, with the resulting sensitivity being 10 ppm (0.2 pct of the 5,000-ppm TLV). Until recently, NDIR detectors were confined to laboratory use only, as they were too delicate to withstand even moderate temperature and humidity variations. The models selected for this system are more robust and are designed for limited field exposures.

SYSTEM CONTROL

The detection system is controlled by a 64-Kb random access memory (RAM) microcomputer and associated hardware. Included are a single 5-1/4-in floppy disk drive, a monitor, a printer, and several expansion cards that perform specific control functions. The computer operates in a process control mode to monitor the operational status of the various detection system components (pumps, analyzers, etc.), cycle the solenoid valves in the proper time sequence, initiate gas analyzer calibration and water trap blowout routines, and issue alarm and trouble warnings. The computer also stores system data and provides the user with several menu-selectable video display, system output, and system control options.

The system's operating program is stored on a single floppy diskette. The program is automatically loaded into the computer's memory upon power-up, eliminating the need to manually reboot the system after a power outage. The disk is also used to store system output data covering a 48-h period. These data include tube number, date, time, CO_2 and CO levels, and vacuum pressure. These values are updated in memory every 6 min and stored on the disk every hour. An on-board modem allows a remote terminal to access the system and automatically transfer data stored on the disk. A larger capacity memory storage device such as a hard disk would permit data from longer time periods to be stored. Depending on the size, several months' storage capacity would be possible.

The computer controls the solenoid valves, alarms, and related devices through a 32-channel, optically isolated power interface. This interface provides the capability to switch both ac and dc voltages while completely isolating these voltages from the computer. When a solenoid is activated, airflow from that tube is diverted into the gas analyzers. After allowing the outputs from the analyzers to stabilize for 10 s, the computer records the gas concentration values, purges the analyzers with atmospheric air for 5 s, and cycles to the next tube.

Three minutes are thus required to cycle through all 12 tubes. To ensure accuracy in measuring gas concentrations, the system also controls a pair of automatic gas analyzer calibrators. When activated by the computer, these calibrators automatically standardize the gas analyzers using calibration gases contained in high-pressure gas storage cylinders.

A 16-channel, 12-bit precision data acquisition system enables the computer to monitor the analog output voltages of the gas analyzers and pressure transducers. This data acquisition system converts the 0- to 5-V outputs into digital form, which can be processed by the computer. When the CO_2 and/or CO gas concentrations exceed a preset limit, the system issues audible and visual warnings indicating a possible fire condition. High or low vacuum (indicating plugged or broken sample tubes, respectively), and low compressed air pressure are also monitored, with trouble alarms provided to warn of system failures.

Under normal operating conditions, the system will cycle through each tube in sequence while the video monitor displays a menu of user-selectable options. One option is a system status display showing the date and time followed by a table listing, by tube number, the current gas concentrations and vacuum readings. The user is also able to change the levels at which a high-gas-concentration alarm and/or a high- or low-vacuum alarm will be activated. A graph of gas concentrations versus time can be generated, as well as a table of minimum, maximum, and average gas concentrations for periods of up to 48 h. Paper printouts of these data displays can also be selected. Finally, manual override control of the gas analyzer calibration and water trap blowout functions is provided.

Whenever an alarm or trouble condition is detected by the system, an audible alarm is sounded, the system status display appears on the video screen, and a hard-copy message indicating the date, time, cause of alarm, and location is printed. The audible alarm continues until it is either acknowledged or until the condition giving rise to the alarm returns to its normal state. In the latter case, a second hard-copy message clearing the alarm is printed. A schematic diagram of the entire system is shown in figure 2.

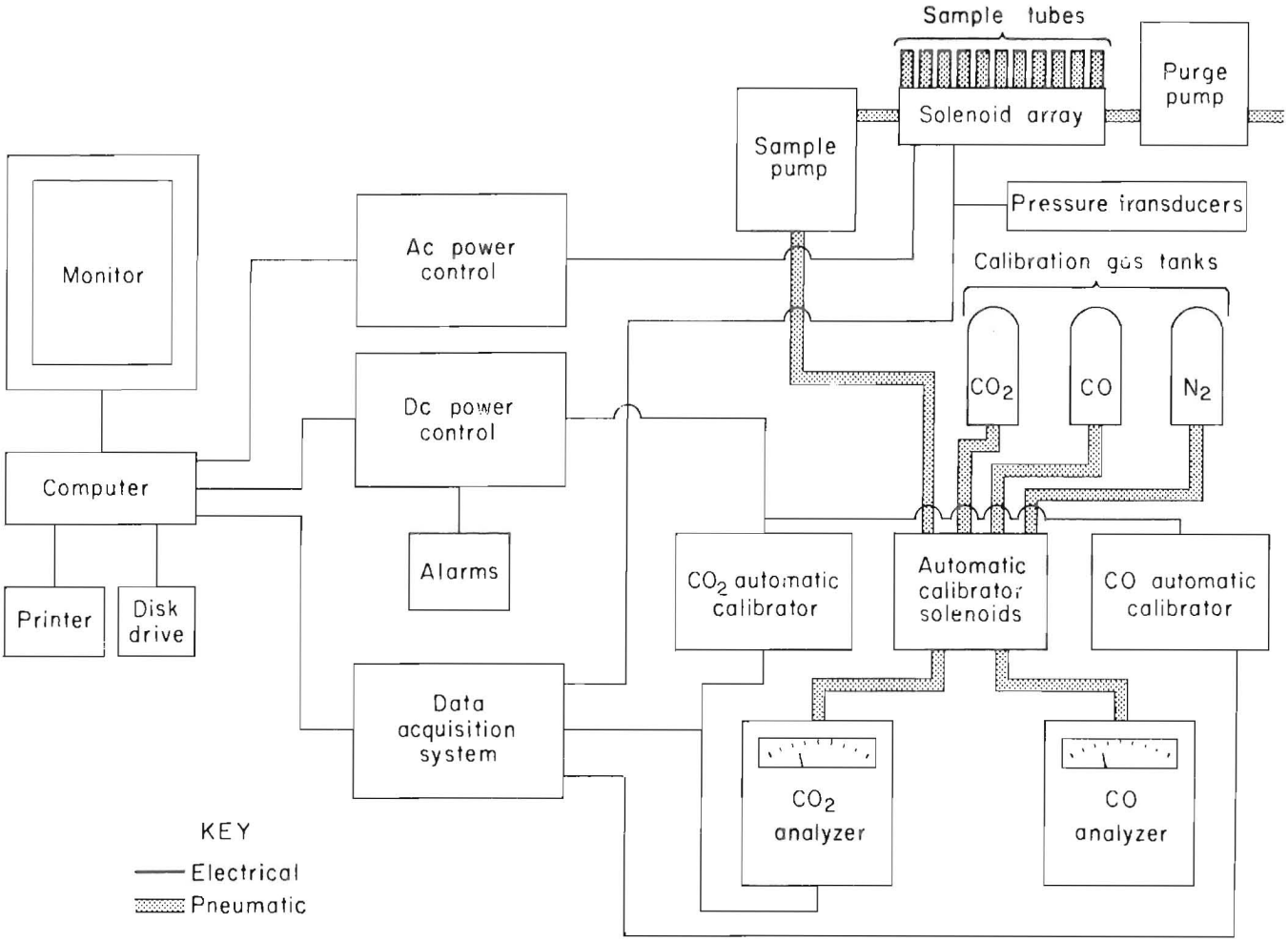

Figure 2.–Schematic of major components of pneumatic fire detection system.

IN-MINE TEST

The prototype pneumatic detection system was installed and functionally tested at a multilevel underground zinc mine in Ogdensburg, NJ. The following sections describe the test site, the installation of prototype equipment, overall system performance during the 3-year test period, and system maintenance and reliability.

DESCRIPTION OF TEST SITE

Because of adverse economic conditions, the mine used for in-mine testing was permanently closed shortly after the in-mine tests were completed. Prior to the shutdown, zinc ore was mined by the overhand cut-and-fill method. Backfill was placed hydraulically after each cut. The host rock is calcite and marble, and the predominant ore minerals are the zinc silicates zincite, willemite, and franklinite. Both stopes and pillars were mined. Diesel load-haul-dump units were used in most stopes, and electric slushers were used in the narrower pillars. Ore was dumped into loading chutes leading to haulage levels where it was hauled by rail to a central ore pass system and crushed underground. At the time the prototype detection system was installed, the mine produced about 350 st of ore per day. Primary access to the mine was through a five-compartment main shaft inclined 52° from the horizontal to follow the dip of the ore body. Access was also possible through an emergency escape shaft (safety exit). An old, unused production shaft also intersects several levels; however, the ladderway and sets in the old shaft had deteriorated to the point that use as an escapeway was not possible.

The mine had 20 active levels, which included an adit to a surface portal, 18 mining levels, and a crusher below the 1,850-ft level, the deepest mining level. The shaft reached a maximum depth of 2,165 ft, while the shaft itself, because of the 52° angle of inclination, was 2,741 ft long. A winze approximately 1,100 ft north of the main shaft provided access from the 1,850-ft level to seven lower levels in the

so-called north ore body. The north ore body was completely mined out and the workings are flooded to within about 25 ft of the 1,850-ft level.

The main fan was located on the 1,750-ft level. Air was downcast through the safety exit, across the 1,750-ft level, and down a raise to the 1,850-ft level, then coursed up the ore chutes, raises, stopes, and pillars, and finally exhausted through the main shaft.

INSTALLATION OF PROTOTYPE EQUIPMENT

The prototype detection system monitored 18 locations through 12 tubes. The system monitored the main shaft, two pumping stations, two crusher stations, the north ore body winze and hoist room, an abandoned research seismograph laboratory, a transformer station, and the exhaust air from nine stopes. Ten tubes monitored single locations, one tube monitored the north ore body winze and hoist room as well as the seismograph laboratory, and the final tube monitored five of the stopes.

The vacuum pumps, gas analyzers, and all system control equipment were installed in a small room in the adit-level shaft station (fig. 3). The room, which had previously been used to store safety equipment, was about 1/4 mile from the mine office and could be accessed on foot without need for shaft or other conveyance. Certain minimal precautions were taken to seal openings in the room against the entrance of moisture, which could affect electrical equipment. The bottom, which was concrete, was sealed with roofing tar, and a new plywood floor was installed. The walls, which were welded steelplate, were sealed where they met the irregular rock surface with aerosol foam filler-sealer. The same foam was used to seal cracks in the corrugated steel roof. Finally, a foam-rubber gasket was installed on the steelplate door. Although the room was far from airtight, it was thought that the heat generated by the pumps, computer, and gas analyzers would be sufficient to maintain a relatively low humidity level within.

Routing of the main bundle was based on consideration for certain mine environmental exposures that could affect system performance. Since a hydraulic fill line with a history of breakage was located in the main shaft from the 430-ft level to the 1,850-ft level, it was decided to route the main bundle in the safety exit through these levels. However, the safety exit was an intake airway, and the temperature through its top few levels could fall below freezing during the winter months. Therefore, it was decided that the main bundle should travel from the control room in the adit, down the main shaft to the 430-ft level, across the 430-ft level to the safety exit, and down the safety exit to the 1,850-ft level. This routing added about 700 ft to the length of the bundle, but eliminated the potential for a broken fill line to sever the tubes and for cold temperatures to cause condensed water to freeze and plug the lines. A cross section of the mine depicting the layout of the main bundle is shown in figure 4.

A total of 39,900 ft of tubing was used in the prototype system. About 80 pct of the total was contained in the main bundle, and the remaining 20 pct were single tubes that branched off on various levels and led to specific monitoring locations. Tubes contained within the main bundle were color coded and numbered to facilitate installation and subsequent system layout changes. The tube bundle manufacturer's maximum bundle size was 10 tubes; thus, two 6-tube bundles were used in the upper levels of the mine where 12 tubes were required. From the 500-ft level to the 1,000-ft level, a single 10-tube bundle was used. From the 1,000-ft level to the 1,500-ft level, an 8-tube bundle was used, and finally, from the 1,500-ft level to the 1,850-ft level, a single 6-tube bundle was used.

In order to ensure that all work would be completed on schedule, it was necessary to order the main bundle before it was known precisely what facilities, personnel, and equipment would be available to accomplish the installation. As a result, the bundle was supplied in 50-ft segments that could easily be handled by one person without special equipment. The disadvantage of working with 50-ft segments, however, is the number of splices necessary. Each splice required about 15 min to complete (fig. 5), caused a slight flow restriction, and represented a potential source of leakage and/or tubing separation. In retrospect, the preferred alternative would clearly have been to ensure that proper equipment and facilities be available to lower the tube bundle from the shaft collar in one continuous length. An acceptable compromise would be segments of 200 to 250 ft.

Regarding the tubing itself, it was found that quality control during manufacture is extremely important to enable an effective and efficient installation. The diameter of some of the tubing supplied in the bundle was found to be slightly oversized, while other segments were slightly undersized. It was difficult to slide the nylon compression sleeve onto the oversized tubing. In many cases, it was necessary to shave the ends of the tubes with a razor knife to get the sleeve on, increasing the time required to make a connection and weakening the tube somewhat. With undersized tubing, it was difficult to tighten the compression fittings sufficiently to achieve a strong connection, producing a potential tubing separation at some point in the future.

The entire detection system was installed by a four-person crew over an 8-week period. Installation of the tubing network required 5 weeks. Installation of the bundle generally involved connecting two to four segments, then attaching the bundle to available mounting points in the shaft or drift. The preferred mounting points were the pins to which water or air lines had been secured. Wherever possible, attachment to the water or air lines themselves was avoided, as these lines were occasionally removed. The pins, however, were permanent. Where there were no water or air lines, the bundle was attached to pitons driven into crevices in the drift or shaft walls. In all cases, care was taken to install the bundle so that it would not be subject to damage from passing equipment. On the 430 level, where the bundle ran 700 ft from the main shaft to the safety exit, drifts occasionally narrowed to the point where the bundle, if hung from pins, could not

Figure 3.-Control room for pneumatic fire detection system.

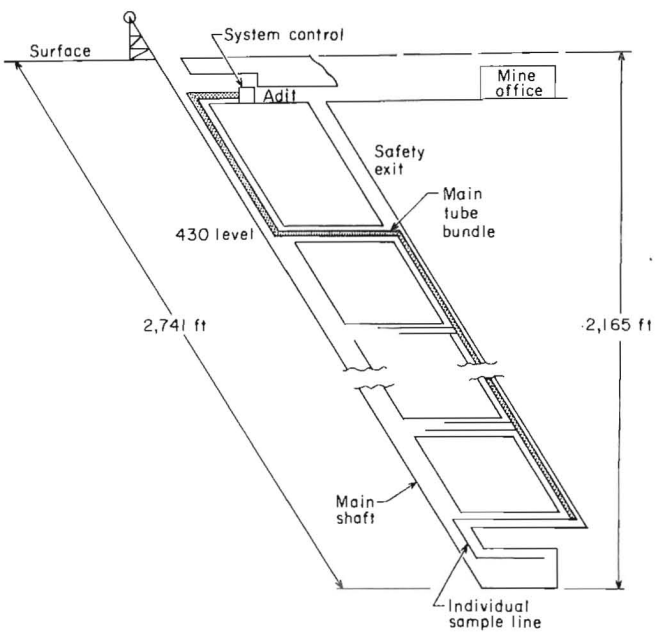

Figure 4.-Mine cross section showing layout of main tube bundle.

Figure 5.-Splicing main tube bundle during installation of pneumatic fire detection system.

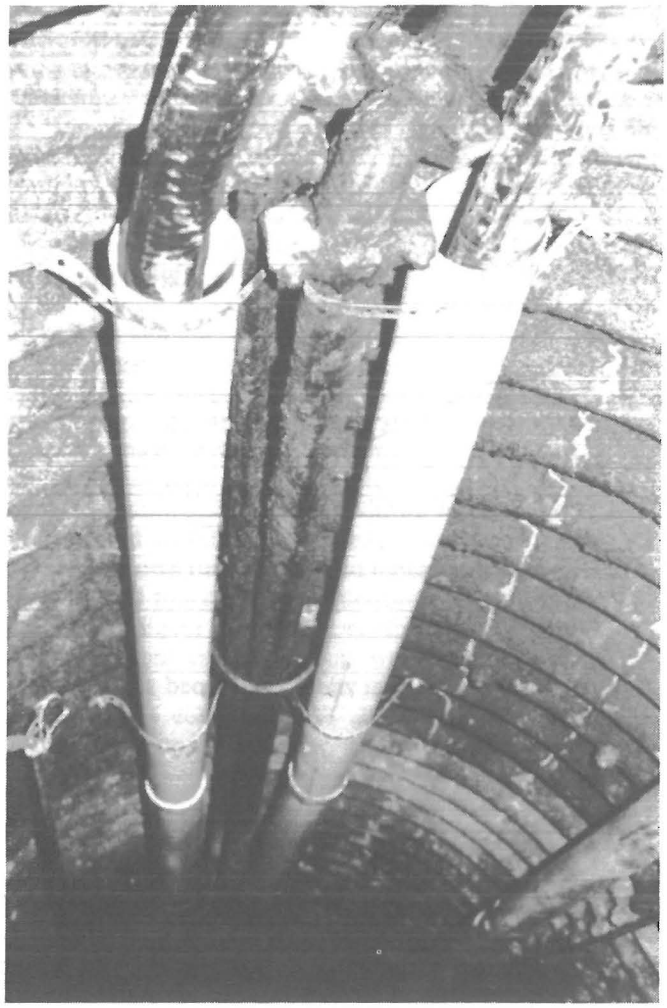

Figure 6.–Routing of main bundles through pipe in narrow drifts.

be prevented from becoming entangled with passing equipment. In those areas, pipes were mounted flush with the drift walls and the bundle was run through the pipes (fig. 6).

The same general practices were employed in installing the individual tubes that branched from the main bundle and led to specific monitoring locations. At the monitoring locations themselves, care was taken to install the tube near the roof, where, because of heat-induced buoyant forces, the concentration of combustion products would be highest.

No unusual problems were encountered during installation of the pumps, control valves, analyzers, computer, and related equipment in the system control room. Noise from the pumps was a bit bothersome, but earplugs provided adequate relief. The various components, including a mine telephone, were arranged so as to be within easy reach of one person.

Once all hardware was installed, an initial checkout of the system was performed. Of particular concern was the continuity and integrity of the sample lines. A vacuum gauge was attached to the monitoring-point end of each sample line and the line evacuated. Then a valve in the control room was closed to seal and isolate the line from the rest of the system. The rate of vacuum decay, as measured by the vacuum gauge, was used as an indication of the extent of leaks in the line. The same procedure was followed using compressed air instead of vacuum, as the system would be operated under both pressure and vacuum, and leakage under one condition might not be apparent during tests under the other condition. These tests represented considerably more severe conditions than would exist under normal operations, because with the monitoring-point end of the line sealed, the maximum vacuum or pressure is much higher than would be the case if the line were open at the end. Several leaks were discovered and repaired, followed by retesting. All lines were found to be sound, with both vacuum and pressure decay times ranging from 2 to 5 min.

SYSTEM PERFORMANCE

Overall performance was found to be satisfactory, in that the system demonstrated the capability to monitor and record CO and CO_2 concentrations at the desired underground locations and warn mine personnel when levels of these gases exceeded specified thresholds. The system did not operate continuously throughout the evaluation period. Operation was interrupted from time to time to conduct experiments, and certain equipment modifications were implemented in a continuing attempt to improve performance. Equipment malfunctions were rare, being limited to initial pump and valve problems, which were easily corrected (corrective action described in the next section).

System operation was closely monitored throughout the 3-year evaluation period. No fires were detected by the system, and aside from late afternoon excursions in both the CO and CO_2 levels corresponding to end-of-shift blasting operations (fig. 7), no alarms occurred during the evaluation. A background level of 1 to 3 ppm CO was observed, probably due to diesel operations; however, no adjustment to the CO alarm level was made.

Quantitative testing was performed during periodic visits to the mine by Bureau personnel. Specific quantitative system performance is described below, based on a series of functional tests conducted at the conclusion of the 3-year in-mine evaluation period. Two parameters were measured during these tests: tube travel time (the time required for a volume of calibration gas to travel the entire length of a tube and register on the analyzer) and dilution. Travel time and dilution testing involved connection of a large plastic bag filled with calibration gas to the monitoring-point end of a tube. The connection included a flowmeter to measure the rate at which the calibration

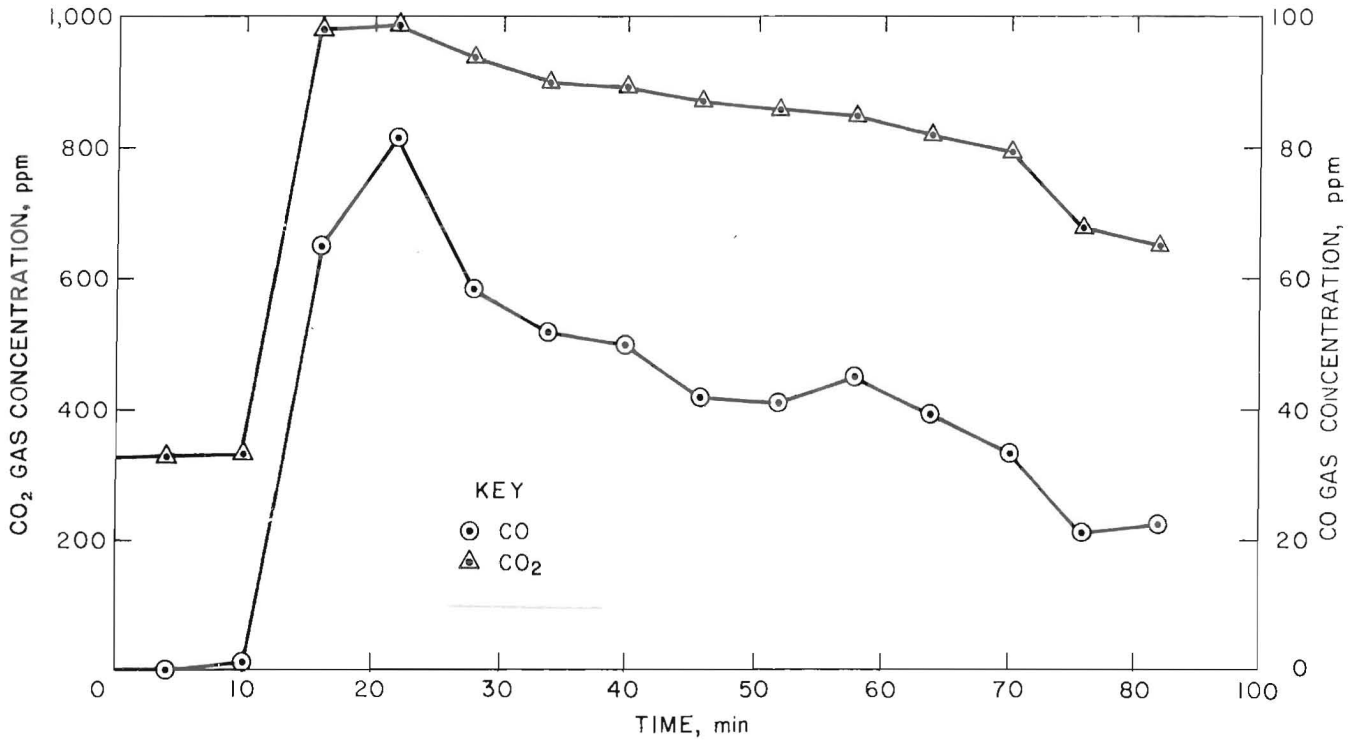

Figure 7.–Elevated CO and CO_2 levels following end-of-shift blasting.

Figure 8.–Calibration gasbag connected to sample tube.

gas was drawn out of the bag by the system (fig. 8). For these tests, 93-ppm-CO calibration gas was used. A testing subroutine to automatically determine the travel time and maximum gas concentration registered by the analyzers was included in the computer program that operated the detection system. At a preset time, the sample tube was connected to the bag and the testing subroutine initiated. Five sample tubes were tested in this manner. The five tubes ranged from the shortest (except for the adit sampling point) to the longest tube in the system. Multiple tests at varying flow rates were conducted on tubes 1, 2, and 10.

For purposes of these tests, tube travel time was defined as the elapsed time from the release of test gas into a sampling point until the analyzer registered 10 ppm CO. The maximum concentration of gas registered by the analyzer was used as a measure of the dilution of the sample. Results of testing are shown in table 2.

Predicted travel times for each tube were calculated based on known tube length and measured flow rate. Predicted travel times matched measured travel times quite well, with a linear correlation coefficient of 0.93.

The 93-ppm calibration gas was diluted considerably during transit because of leaks in the sample tubes, with maximum gas concentrations at the analyzer registering from 46 to 76 ppm. However, as noted above, travel times were not appreciably affected, meaning the detection system was capable of providing a timely warning despite the leakage.

Table 2.–Summary of results of travel time and dilution tests

Tube	Length, ft	Flow, cfm	Travel time, min		Max gas conc, ppm
			Predicted	Measured	
1	3,550	0.33	8.2	9.7	76
		.22	12.7	17.5	67
2	3,775	.54	5.3	5.3	58
		.36	8.1	9.2	46
		.48	6.1	6.5	58
3	4,775	.43	8.6	8.6	76
9	1,875	.31	4.7	6.2	58
10	560	.20	2.0	3.7	54
		.42	1.0	1.8	75
		.22	1.8	3.3	61
		.32	1.3	2.0	66
		.25	1.6	2.8	58

The provision for blowing water from the sample tubes proved to be quite effective. Inspection of the tubes shortly after the system was commissioned, but prior to the installation of the water traps, revealed accumulations of water at low points where the tubes sagged. Following installation of the traps (fig. 9), such accumulations were not completely eliminated; however, enough of the water was

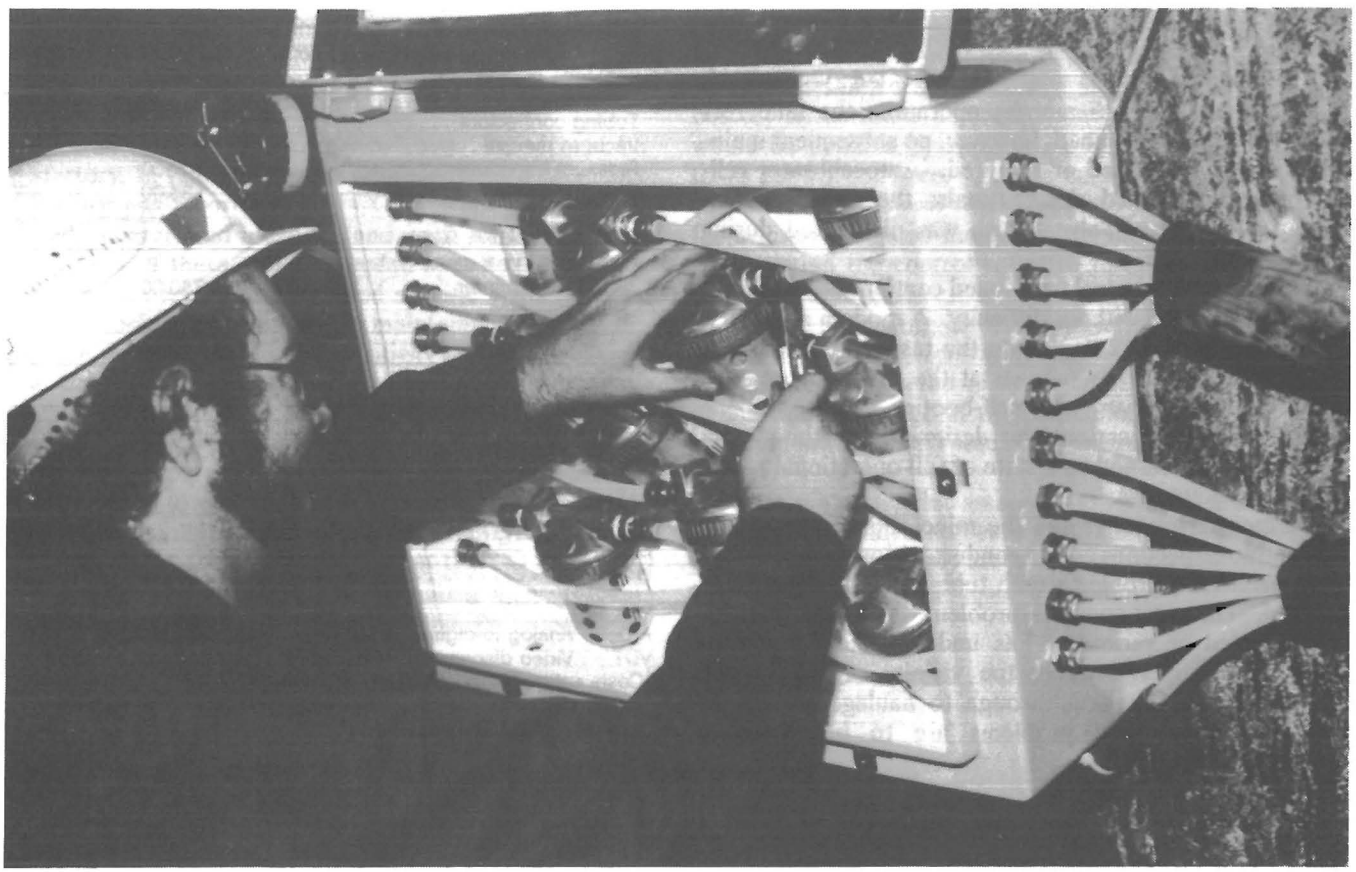

Figure 9.–Water traps installed in main tube bundle.

removed by the traps that system performance was not impaired by accumulated water. Purging the tubes with high-pressure (80 psi) compressed air cleared both the traps and other water accumulations.

MAINTENANCE AND RELIABILITY

As a result of the design of the system and the installation precautions discussed earlier, system maintenance requirements were minimal. Mine personnel made a visual check of the system about once a week, and calibration gas tanks required replacement every 3 months. At that time, the analyzers were manually calibrated and the vacuum pumps were checked for dirt and debris in their in-line filters. The pumps originally installed in the system were of the diaphragm type and exhibited a tendency toward overheating, a condition that effectively shut down the system because of the pumps' thermal protection feature. The rotary-vane pumps that were subsequently installed eliminated the problem and proved to be less noisy as well.

Difficulties were encountered with the three-way solenoid valves shortly after installation. The valves functioned properly in the sampling mode; however, the back pressure produced during the water trap blowout mode exceeded the force limitation of the reset spring. Leakage through the valves prevented sufficient pressure from building in the tubes to effectively blow out accumulated water. These valves were subsequently replaced with ones having a higher back pressure rating, and no further problems were experienced.

Reliability of the gas analyzers exceeded the project's design goals. After 6 months operation, the analyzers were removed and cleaned; however, no subsequent maintenance was performed or required. Autocalibrator reliability also exceeded design goals; the only problem was a faulty control valve, which was discovered during installation.

The computer control functioned continuously throughout the test period without difficulty. A modem accessory, which was installed 2 years into the test period, was also highly reliable. Power outages at the minesite occurred occasionally; however, the self-booting feature of the control software functioned as designed, and the system automatically returned to a state of full operational readiness when power was restored.

Bureau personnel visited the mine about twice a year for routine inspections and to conduct various experiments. With each visit, problems with tubing integrity were discovered. The most common problem was tubing that was disconnected at various points underground because of maintenance operations in the vicinity of the bundle or from stopes breaking through to haulage levels. In an active mine, such problems are to be expected, especially for experimental equipment, and the tubing was reconnected or rerouted, as necessary. In a few rare cases, breaks due to faulty connections were found and repaired. The problem of faulty connections can be minimized by using higher quality tubing and by employing longer tube bundle segments (or ideally, a continuous-length bundle) to reduce the number of connections required.

SYSTEM COSTS

Estimated total costs of the prototype pneumatic detection system, including hardware, software, and installation, are summarized in table 3. Similar costs for an electronic telemetry system with roughly equivalent detection capabilities are summarized in table 4. These estimated costs for the two systems are not significantly different. Total life-cycle costs, however, which include long-term inspection, maintenance, repair, and replacement of failed equipment, would likely favor the pneumatic system, as all mechanical and electrical equipment is located in a relatively nonhostile environment and is easily accessible for inspection and maintenance.

Table 3.–Estimated cost of prototype pneumatic detection system, including hardware, software, and installation[1]

Item	Quantity	Unit cost	Cost
Hardware:			
Tubing, ft:			
6-tube bundle	3,500	$3.10	$10,850
8-tube bundle	650	4.20	2,730
10-tube bundle	650	5.25	3,410
Individual	7,000	.20	1,400
Tubing connectors	750	2.30	1,725
Vacuum pumps	2	250.00	500
Pressure transducers	3	300.00	300
Solenoid valves	14	35.00	490
Miscellaneous fittings	100	1.00	100
Computer system, with 64-Kb RAM, 1 drive, VDT, and printer	1	1,750.00	1,750
Digital interface modules:			
A-D converters	16	40.00	640
I-O modules	20	40.00	800
Gas analysis:			
Analyzers[2]	2	3,400.00	6,800
Auto calibrators[2]	2	1,200.00	2,400
Calibration gas tanks	4	120.00	480
Miscellaneous other			1,000
Total			35,375
Software			10,000
Installation	([3])	175.00	28,000
Grand total			73,375

A-D Analog-to-digital. I-O Input-output.
VDT Video display terminal. RAM Random access memory.
[1]Costs estimated in 1988 U.S. dollars.
[2]1 CO, 1 CO_2.
[3]4 persons for 40 days.

Table 4.–Estimated cost of electronic telemetry fire detection system, including hardware, software, and installation[1]

Item	Quantity	Unit cost	Cost
Hardware:			
Electrochemical gas analyzers:			
CO	12	$900.00	$10,800
CO_2	12	1,200.00	14,400
Data communication system, including 12 outstations, A-D converters, I-O modules, multiplexer, VDT, 64-Kb RAM microcomputer, drives, printer	1	15,000.00	15,000
Telemetry line, 22 AWG, twisted pair with shield ft	12,000	.30	3,600
Miscellaneous other			1,000
Total			44,800
Software			10,000
Installation	([2])	175.00	21,000
Grand total			75,800

A-D Analog-to-digital. AWG American wire gauge.
I-O Input-output. RAM Random access memory.
VDT Video display terminal.
[1]Costs estimated in 1988 U.S. dollars.
[2]4 persons for 30 days.

During the 3-year in-mine test, operating costs for the prototype pneumatic system were quite low. As noted in the section on maintenance and reliability, the originally installed diaphragm-type pumps were replaced with rotary-vane pumps; however, they are expected to last for years. Routine replacement items included end-of-line dust filters (approximately $3.00 per line per year) and calibration gas (approximately $400.00 per year for the system). Inspection and maintenance should average less than 4 h per month. Although it is difficult to compare operating costs for pneumatic versus telemetered systems, the telemetered system would probably be more costly to operate. Maintaining the detectors, for example, would be more time consuming because they are scattered throughout the mine. Routine replacement items for a telemetered system could also be quite costly. For example, if electrochemical detectors are used, the electrochemical cells must be replaced in every detector each 6 to 18 months, at a cost of $50.00 to $150.00 each.

SUMMARY AND CONCLUSIONS

The Bureau initiated research in 1983 to investigate pneumatic detection system applications in multilevel metal and nonmetal mines. A completely automated 12-tube system, equipped for CO and CO_2 detection and operated by a 64-Kb RAM microcomputer, was subsequently designed and installed in an underground zinc mine for a 3-year in-mine evaluation.

Overall system performance was found to be satisfactory, in that the system demonstrated a capability to monitor and record CO and CO_2 concentrations at the desired underground locations and warn mine personnel when levels of these gases exceeded specified threshold. The in-mine evaluation addressed specific system design criteria, including reliability, maintainability, system response time, measurement sensitivity and accuracy, and cost. Except for measurement accuracy, each criteria was satisfied or exceeded. With respect to measurement accuracy, sample tube leakage resulted in dilution of the air samples, producing erroneous gas concentration measurements at the analyzers. In one series of tests, 93-ppm-CO calibration gas released into several sampling points registered from 46 to 76 ppm at the CO analyzer.

The cause of the leakage and resulting measurement error was known, however, and could be avoided in future installations. As noted earlier, the leakage occurred at faulty junctions in the tube bundle. These could be minimized or eliminated by employing higher quality tubing and by utilizing a continuous length of tube bundle to reduce the number of tube bundle interconnections.

Though elimination of leakage would be the preferred course, an accurate determination of gas concentration would be possible by appropriate adjustment of the system's control software. Using a calibration gas of known concentration, the user would measure the level of dilution for a given tube and insert a ratio multiplier correction factor within the control software to adjust the analyzer output for that tube.

Finally, depending on the application, accurate measurement of gas concentrations may not be essential. In certain cases, the trend of a contaminant level over time or the rate of change of the contaminant level may be a sufficient indicator of a potentially dangerous heating event or fire.

Parts listings, detailed assembly instructions, and a listing of the system control software program (written in BASIC programming language) are available upon request to the authors at Twin Cities Research Center.

REFERENCES

1. Butani, S. J., and W. H. Pomroy. A Statistical Analysis of Metal and Nonmetal Mine Fire Incidents in the United States From 1950 to 1984. BuMines, IC 9132, 1987, 41 pp.

2. Stephan, C. R., and T. Sokol. Summary of Underground Metal/Nonmetal Mine Fires 1978-1986. MSHA Ind. Saf. Div. Rep. 04-223-87, Aug. 11, 1987, 18 pp.

3. Baker, R. M., J. Nagy, L. B. McDonald, and J. Wishmyer. An Annotated Bibliography of Metal and Nonmetal Mine Fire Reports (contract J0295035, Allen Corp. of America). Volume I. BuMines OFR 68(1)-81, 1980, 64 pp.; NTIS PB 81-223729.

4. FMC Corp. Mine Shaft Fire and Smoke Protection System (contract H0242016). Volume I–Design and Demonstration. BuMines OFR 24-77, 1975, 407 pp.; NTIS PB 263 577.

5. Chamberlain, E. A. C. Recent Developments in the Continuous Monitoring of Mine Air for the Detection of Spontaneous Combustion. Paper 16 in Proceedings of the Symposium on the Prevention of Spontaneous Combustion. Inst. Min. Eng., London, 1970, pp. 239-247.

6. _____. The Continuous Monitoring of Mine Air by the Tube Bundle Technique: A Note on Installation and Maintenance. Nat. Coal Board, London, 1972, 41 pp.

7. Chamberlain, E. A. C., W. R. Donaghue, D. A. Hall, and C. Scott. The Continuous Monitoring of Gases: the Development and Use of a "Tube Bundle" Technique. Min. Eng., (London), v. 133, Mar. 1974, pp. 239-251.

8. Thomas, V. M., and K. W. Chandler. Monitoring and Remote Control–Progress Towards Automation in British Coal Mines, 1978. Min. Eng., (London), v. 137, Oct. 1978, pp. 251-261.

9. Chakravorty, R. N., and R. L. Woolf. Evaluation of Systems for Early Detection of Spontaneous Combustion in Coal Mines. Paper in Proceedings of the 2nd International Mine Ventilation Congress (Reno, NV, Nov. 4-8, 1979). Soc. Min. Eng. AIME, 1980, pp. 429-436.

10. Fauconnier, C. J. The Early Detection of Fires and Spontaneous Heatings in South African Collieries. J. S. Afr. Inst. Min. & Metall., v. 81, May 1981, pp. 122-130.

11. Highton, W. (British Coal). Private communication, 1987; available upon request from W H. Pomroy, BuMines, Pittsburgh, PA.

12. Litton, C. D., M. Hertzberg, and A. L. Furno. Fire Detection Systems in Conveyor Belt Haulageways. BuMines RI 8632, 1982, 26 pp.

13. Hertzberg, M., and C. D. Litton. Multipoint Detection of Products of Combustion With Tube Bundles. Transit Times, Transmissions of Submicrometer Particulates, and General Applicability. BuMines RI 8171, 1976, 40 pp.

14. Fink, Z. J., and D. T. Adler. Continuous Monitoring System for Mine Gas Concentrations Using Tube Bundles. BuMines RI 8060, 1975, 15 pp.

15. Hertzberg, M., and C. D. Litton. Pneumatic Fire Detection With Tube Bundles. J. Fire & Flammability, v. 9, No. 4, Apr. 1978, pp. 199-216.

16. Litton, C. D. Design Criteria for Rapid-Response Pneumatic Monitoring Systems. BuMines IC 8912, 1983, 23 pp.

17. National Fire Protection Association. Standard on Automatic Fire Detectors. National Fire Codes. NFPA 72E–1984, 1984, 48 pp.

INT.BU.OF MINES,PGH.,PA 29111