RI 9512

RI 9512

REPORT OF INVESTIGATIONS/1994

PLEASE DO NOT REMOVE FROM LIBRARY

LIBRARY
SPOKANE RESEARCH CENTER
RECEIVED
OCT 1 6 1994
US BUREAU OF MINES
E 315 MONTGOMERY AVE
SPOKANE WA 99207

Recovery of Flake Graphite From Steelmaking Kish

By P. D. Laverty, L. J. Nicks, and L. A. Walters

UNITED STATES DEPARTMENT OF THE INTERIOR

BUREAU OF MINES

U.S. Department of the Interior Mission Statement

As the Nation's principal conservation agency, the Department of the Interior has responsibility for most of our nationally-owned public lands and natural resources. This includes fostering sound use of our land and water resources; protecting our fish, wildlife, and biological diversity; preserving the environmental and cultural values of our national parks and historical places; and providing for the enjoyment of life through outdoor recreation. The Department assesses our energy and mineral resources and works to ensure that their development is in the best interests of all our people by encouraging stewardship and citizen participation in their care. The Department also has a major responsibility for American Indian reservation communities and for people who live in island territories under U.S. administration.

Report of Investigations 9512

Recovery of Flake Graphite From Steelmaking Kish

By P. D. Laverty, L. J. Nicks, and L. A. Walters

UNITED STATES DEPARTMENT OF THE INTERIOR
Bruce Babbitt, Secretary

BUREAU OF MINES

International Standard Serial Number
ISSN 1066-5552

CONTENTS

	Page
Abstract	1
Introduction	2
Materials	2
Physical beneficiation	3
Air elutriation	3
Magnetic separation	4
Froth flotation	4
Foam elutriation	5
Hydraulic classification	6
Chemical purification	7
Acid leaching	7
Graphite washing and dewatering	8
Spent acid treatment	8
Solid wastes and byproducts	9
Evaluation of graphite products	10
Pilot plant design	10
Basis	11
Concentrator section	11
Leaching section	11
HCl leaching	11
HF leaching	11
Drying	12
Waste treatment section	12
HCl recovery	12
Vapor scrubber	12
Fluoride disposal	12
Design summary	12
Conclusions	13
Appendix A.—Material balance for kish process	14
Appendix B.—Flowsheet for kish process	21

TABLES

1.	Composition of minus 6-mesh kish	2
2.	Size distribution and chemical analysis for overflow produced at air velocity of 9.0 ft/s	3
3.	Froth flotation results using air classifier underflow material	4
4.	Results for froth flotation of minus 50- plus 100-mesh overflow product	4
5.	Comparison of composition of foam and air elutriation products	5
6.	Results from foam elutriation test using air elutriation overflow as feed	5
7.	Results from foam elutriation test using plus 100-mesh air elutriation overflow as feed	6
8.	Effect of feed rate on grade and recovery for Whirlsizer classifier overflow product	6
9.	Results from reprocessing minus 50- plus 100-mesh primary Whirlsizer classifier overflow	7
10.	Composition of plus 100-mesh feed for acid leach circuit	7
11.	Analysis of HCl-leached kish graphite	8
12.	Results from four-stage countercurrent washing of acid-leached kish	8
13.	Data from filtration of iron-kish precipitate	9
14.	Chloride ion distribution data from filtration of iron-kish precipitate	9
15.	Data from filtration of $CaSO_4$ precipitate	9
16.	Chloride ion distribution data from filtration of $CaSO_4$ precipitate	9

UNIT OF MEASURE ABBREVIATIONS USED IN THIS REPORT

Btu	British thermal unit	lb	pound
cm	centimeter	lb/d	pound per day
ft	foot	lb/ft^3	pound per cubic foot
ft^3	cubic foot	$(lb/h)/ft^2$	pound per hour per square foot
ft^3/min	cubic foot per minute	m	meter
ft/s	foot per second	min	minute
g	gram	mm	millimeter
gal	gallon	m/s	meter per second
$(gal/h)/ft^2$	gallon per hour per square foot	pct	percent
gal/min	gallon per minute	ppm	part per million
g/t	gram per metric ton	rpm	revolution per minute
h	hour	s	second
h/d	hour per day	st	short ton
in	inch	st/d	short ton per day
kg	kilogram	t	metric ton
$(kg/h)/m^2$	kilogram per hour per square meter	wt pct	weight percent
L	liter		

RECOVERY OF FLAKE GRAPHITE FROM STEELMAKING KISH

By P. D. Laverty,[1] L. J. Nicks,[2] and L. A. Walters[3]

ABSTRACT

This report describes a processing method developed by the U.S. Bureau of Mines to produce high-quality flake graphite from the steelmaking waste known as kish. The kish produced by current steelmaking practices is a mixture of graphite, desulfurization slag, and iron that is skimmed from the molten iron feed to the basic oxygen furnace. It is estimated that the graphite content of kish discarded by U.S. steel plants is more than sufficient to meet the total U.S. demand for flake graphite. That need is now filled by natural graphite from foreign sources.

Kish was treated by a combination of screening and hydraulic classification to produce a concentrate containing greater than 70 pct graphite. Leaching of the concentrate with hydrochloric acid solution gave a graphite product with 95-pct purity. An optional secondary leaching operation with hydrofluoric acid produced graphite with a purity of 98 pct or greater. The flake size of graphite from kish ranged from 10 mesh down. Evaluation of test samples by industrial graphite users indicated that kish graphite is a suitable substitute for the natural material for most uses. A process flowsheet and material balance for pilot plant design are presented.

[1]Chemical engineer (now with Army Corps of Engineers, Anchorage, AK).
[2]Research chemist.
[3]Supervisory physical scientist (retired).
Reno Research Center, U.S. Bureau of Mines, Reno, NV.

INTRODUCTION

As part of its research efforts to encourage conservation and reuse of natural resources, the U.S. Bureau of Mines (USBM) has investigated the recovery and purification of flake graphite from a steelmaking waste known as kish. Graphite is a strategic mineral for which there are currently no domestic sources. Its major uses are in refractories and crucibles used in steelmaking, lubricants, brake linings, electric motor brushes, and batteries. During the 5 years ending in 1992, the United States imported an annual average of 53,000 st of natural graphite, mainly from Mexico, China, Brazil, and Madagascar.[4]

A possible alternate source of flake graphite is kish. Kish is a general term for the waste material that collects at the surface of molten iron (hot metal) after it is tapped from a blast furnace. At tapping temperature, the liquid iron is saturated with dissolved carbon. As the iron cools during tapping and transporting to the steel shop, it becomes supersaturated and carbon comes out of solution as flakes of graphite which float to the surface of the iron. The hot metal is usually transported from the blast furnace to the steel shop in a refractory-lined railcar known as a Pugh ladle or torpedo car. Since the blast furnace is typically tapped every 4 h and the basic oxygen furnace (BOF) for steelmaking runs at about 30 min per batch, the Pugh ladles also provide surge capacity for the plant. The longer the hot metal is held, the greater the cooling, and the greater the yield of graphite. Longer holding times also result in the formation of larger graphite flakes, which have a higher value.

Upon entering the steel shop, the hot metal is usually desulfurized by injecting a mixture of magnesium and lime or calcium carbide and lime. Desulfurization may be done directly in the Pugh ladle or, more commonly, in a transfer ladle that is filled from the Pugh ladle. The desulfurization operation produces a lime-rich slag that mixes with the graphite already present as well as with additional graphite that is released during the process. The final step before pouring hot metal into the BOF is skimming. To remove all the slag and graphite from the surface of the hot metal, some iron is also skimmed. It is this mixture that is called kish. The skimmed kish is transported in refractory-lined pots to a dumping area, where it is allowed to cool. Large lumps of iron are recovered for recycle, and the remaining kish is buried.

This investigation studied physical beneficiation and chemical purification methods to recover and purify flake graphite contained in kish. Emphasis during physical beneficiation was on producing a graphite concentrate with maximum recovery of the larger flake sizes and on minimizing the acid consumption required for final purification. Chemical purification experiments investigated the effects of different leaching solutions and conditions on producing graphite with physical properties and purity similar to those of natural graphite. Finally, samples of the purified graphite products were sent to industrial graphite users to determine if kish graphite could be substituted for natural flake graphite.

MATERIALS

The quantity of kish produced and its chemical and physical properties vary from plant to plant owing to variations in production practices. Kish used in this study was collected as a 3,000-lb (1,400-kg) sample from an Ohio steel plant. Preliminary work with this material had shown that 99 pct of the free graphite content occurs in the minus 4-mesh fraction and over 90 pct is in the minus 10-mesh fraction. The entire bulk sample was therefore screened for a target recovery of 95 pct of the graphite at 6 mesh. The plus 6-mesh material was discarded, and the undersize was split into four equal portions.

Particle size of the starting material ranged from 6-mesh pieces of iron down to micrometer-sized particles of slag. The wide variation in size and composition of individual particles made head sample analysis difficult. An approximate composition of the minus 6-mesh kish is listed in table 1. The metallic iron portion of kish contains 5.5 pct C, present as solid solution, as iron carbide grains, and as finely divided exsolved graphite. Therefore, it is important to note that the head sample with a total carbon content of 15.6 pct contained only 12.6 pct recoverable free graphite.

Table 1.—Composition of minus 6-mesh kish, percent

C	15.6	S	3.8
CaO	9.7	SiO_2	9.2
Fe	54.6	H_2O	2.9
MgO	2.7	Other (Al_2O_3, MnO, P)	1.5

The chemicals used during the project were purchased in bulk and were of commercial purity.

[4]Taylor, H. A., Jr. Graphite (Natural). Sec. in USBM Miner. Commod. Summ. 1993, p. 74.

PHYSICAL BENEFICIATION

The first phase of the research involved investigating various methods of physical beneficiation for producing a graphite concentrate from the screened raw kish. Any grinding of the material was ruled out because of the high value associated with large flake graphite. Particular emphasis was placed on methods that would not cause excessive attrition of the graphite flakes. Studies of air elutriation, magnetic separation, froth flotation, foam elutriation, and hydraulic classification are described below.

AIR ELUTRIATION

The first method of separation studied was air elutriation. The elutriation columns were vertical plastic pipes 13 ft (4.0 m) tall through which an upward airflow was provided by suction blowers designed for industrial vacuum cleaners. Feed points into the columns were 50 in (1.3 m) from the column tops, and minus 6-mesh kish was fed by a vibratory feeder into the center of the columns. Columns 4 and 6 in (10.2 and 15.2 cm) in diameter were used to obtain closely controlled air velocities ranging from 3 to 15 ft/s (0.9 to 4.6 m/s). Airflow was measured with an orifice plate flowmeter and a differential pressure cell which activated an automatic power controller for the blowers.

Kish fed into an operating column resulted in two products. The heavy, iron-rich fraction fell through the column into an underflow collection bin. The light, graphite-rich fraction was transported upward through a reducer at the top of the column, turned downward, and settled in an overflow collection bin. The air passed through a filter in the overflow bin and through the flowmeter to the blower plenum.

Experiments were conducted to determine the effects of changing air velocity on graphite recovery and product grade. Air velocities of 7.0 to 11.0 ft/s (2.1 to 3.4 m/s) were tested using approximately 1 ft^3 (0.03 m^3) of minus 6-mesh kish. Sieve analyses of the underflow and overflow products enabled the following observations to be made:

- Increasing air velocity increased the portion of the feed captured as overflow product.
- Increasing air velocity increased the amount of coarse graphite flake in the overflow product.
- Carbon content decreased and contaminant (Al, Ca, Fe, Mg, Mn, SiO_2) content increased for decreasing particle size in the overflow.
- Increasing air velocity decreased carbon content and increased contaminant content in any specific size fraction of overflow.

Table 2 lists size distribution and chemical analysis data for air elutriation overflow produced at 9.0 ft/s (2.7 m/s). The data show the decrease of carbon content as size decreases. Producing a feed material for subsequent acid leaching that is as clean as possible is important to minimize acid consumption and waste solution treatment. From the data in table 2, it was judged that acid leaching the minus 100-mesh overflow would not be practical. The minus 100-mesh fraction accounted for 47 wt pct of the overflow but contained 71 pct of the Ca, 51 pct of the Fe, and only 28 pct of the C. Discarding the minus 100-mesh fraction from the air elutriation overflow would quickly remove a major portion of the acid-consuming contaminants with an acceptable sacrifice in recovery of the smallest graphite flakes.

Table 2.—Size distribution and chemical analysis for overflow[1] produced at air velocity of 9.0 ft/s (2.74 m/s)

U.S. sieve size, mesh	Weight fraction, pct	Chemical analysis, pct				Distribution, pct			
		C	Ca	Fe	SiO_2	C	Ca	Fe	SiO_2
Plus 20	4.3	88.4	1.2	6.4	1.5	9.8	0.4	1.3	1.4
Minus 20 plus 40	9.5	75.3	3.6	10.2	2.2	18.4	2.7	4.5	4.5
Minus 40 plus 50	10.1	52.8	7.9	18.0	5.2	13.7	6.2	8.5	11.4
Minus 50 plus 60	7.6	46.5	8.8	22.2	7.4	9.1	5.2	7.9	12.2
Minus 60 plus 80	15.0	39.8	8.2	25.8	4.6	15.3	9.6	18.1	15.0
Minus 80 plus 100	6.2	36.9	9.5	31.2	4.6	5.9	4.6	9.1	6.2
Minus 100 plus 140	12.2	29.2	11.3	31.2	4.6	9.1	10.7	17.8	12.2
Minus 140 plus 200	9.6	21.6	15.3	29.1	4.7	5.3	11.4	13.1	9.8
Minus 200	25.5	20.5	24.8	16.5	4.9	13.4	49.2	19.7	27.2
Calculated overflow	100.0	38.9	12.9	21.4	4.6	100.0	100.0	100.0	100.0

[1]Overflow product represented 27.2 wt pct of the feed.

The plus 50-mesh fraction of the overflow did not appear by microscopic examination to contain discrete particles of iron or slag. The contaminant particles were incorporated within the graphite flakes, and further purification required chemical methods.

The minus 50- plus 100-mesh fraction contained both flake graphite and discrete contaminant particles. Additional treatment of this size fraction was studied and is discussed in the froth flotation section of this report.

Air elutriation underflow was predominantly coarse iron and slag but also contained flake graphite. Visual inspection of various size fractions of the underflow showed that flake graphite was present in the minus 6- plus 20-mesh fraction. Magnetic separation and froth flotation were two methods tried to recover additional flake graphite from air elutriation underflow.

MAGNETIC SEPARATION

The most obvious choice of methods for physical separation of graphite from a large quantity of iron is magnetic separation. Both low- and high-gradient tests were made with Carpco laboratory separators in attempts to recover additional graphite from the heavy air elutriation tailings. As expected, iron was easily separated from the nonmagnetic slag, but graphite particles were distributed between both products. Microscopic examination of the graphite showed that many of the flakes contained small embedded spheres of iron that caused them to respond as magnetic particles. This was found to be a common occurence in kish samples from a variety of sources, and it makes magnetic separation nearly useless.

FROTH FLOTATION

Graphite is naturally hydrophobic and requires no collector for flotation if it has clean surfaces. It floats so easily, in fact, that graphite smeared on accompanying particles of slag and iron also causes them to float if the frother is too aggressive. Initial experiments with a pine oil frother demonstrated this, so methyl isobutyl carbinol (MIBC) was chosen as a more selective frother for which the flotation efficiency could be increased if necessary by adding kerosene. Flotation experiments were performed using a Denver laboratory-sized flotation machine. Impeller speed was set at 800 rpm to minimize graphite attrition. The amount of MIBC and kerosene added and conditioning time were the variables in experiments using minus 6- plus 20-mesh air elutriation underflow as feed. Froth flotation was effective in producing a concentrate high in carbon and low in contaminants. Results from these tests are listed in table 3. The apparent low carbon recovery occurs because only 51 pct of the total carbon is recoverable graphite; the remainder is locked within iron particles.

Success with froth flotation in recovering additional graphite from air elutriation underflow led to flotation experiments using the minus 50- plus 100-mesh air elutriation overflow as feed. Flotation using only MIBC frother was effective in producing a concentrate that contained virtually all the graphite present in the feed while rejecting most of the contaminants. Table 4 lists results for flotation of minus 50- plus 100-mesh air elutriation overflow. Use of kerosene along with MIBC resulted in increased amounts of contaminants in the flotation concentrate, compared with the concentrate produced using only MIBC.

Table 3.—Froth flotation results using air classifier underflow material

Test variables[1]			Flotation concentrate chemical analysis, pct					Fraction of total in concentrate, pct					
MIBC, drops	Kerosene, drops	Condition, s	C	Ca	Fe	Mg	SiO_2	Wt	C	Ca	Fe	Mg	SiO_2
4	0	15	75.1	3.1	8.4	0.9	5.3	1.0	9.6	0.6	0.1	0.8	0.4
4	3	15	53.9	3.1	15.4	0.8	18.6	5.0	40.4	4.6	1.2	4.6	9.2
4	3	0	63.3	2.4	12.9	0.6	14.8	4.8	39.5	2.5	1.1	2.4	5.1
4	7	0	51.1	3.2	15.5	0.8	21.2	5.5	39.2	4.5	1.3	4.5	11.3
3	10	30	43.9	3.6	18.4	1.0	28.3	5.8	37.5	7.6	1.3	7.5	21.9
[2]0	0	0	7.2	4.0	64.0	1.0	9.0	NAp	NAp	NAp	NAp	NAp	NAp

NAp Not applicable.
[1]All tests used 1,100 mL H_2O and 200 g of minus 6- plus 20-mesh feed.
[2]Head sample.

Table 4.—Results for froth flotation[1] of minus 50- plus 100-mesh overflow product

	Chemical analysis, pct					Distribution, pct					
	C	Ca	Fe	Mg	SiO_2	Wt	C	Ca	Fe	Mg	SiO_2
Concentrate	59.6	3.3	17.5	0.9	2.8	72.8	96.3	37.9	55.9	36.4	56.0
Tailings	6.1	14.5	36.9	4.1	5.9	27.2	3.7	62.1	44.1	63.6	44.0
Head	45.1	6.3	22.8	1.8	3.6	100.0	100.0	100.0	100.0	100.0	100.0

[1]All tests: 1,200 mL H_2O, 100 g kish, 4 drops MIBC, conditioned for 1 min.

FOAM ELUTRIATION

Recent mineral processing and extractive metallurgy literature has reported increased grade and recovery in flotation circuits that have switched to column flotation. Column flotation experiments using kish as feed were conducted after the successful results from the standard flotation experiments. Minimizing attrition of flake graphite was another potential advantage offered by column flotation.

A clear plastic 6-in (15.2-cm) diam by 14-ft (4.3-m) tall column was constructed. Compressed air, reagents, and water were introduced at the base through a bubble injector. Concentrate was collected at the top of the column, and tailings settled into a collection tank below the bubble injector.

Column flotation tests using minus 6-mesh kish as feed were promising, but by observing the column during test runs it was easily seen that a large amount of graphite was not being lifted into the foam overflow. Operation of the column was modified so that there was a net overflow of water out the top of the column, thereby decreasing the foam zone of the column from 3 to 4 ft (0.9 to 1.2 m) down to 1/2 in (1.2 cm). Without a tall, distinct foam zone for drainage and concentrate cleaning, operation of the column departed from column flotation; we have called the operation foam elutriation.

Foam elutriation tests were conducted using minus 6-mesh kish as feed and kerosene and tetradecyltrimethyl ammonium bromide as conditioning reagents. Table 5 compares foam elutriation concentrate and air elutriation overflow. The results show that foam elutriation produces a cleaner product than air elutriation. A problem with foam elutriation is that throughput for comparably sized columns is less than one-fifth of that for air elutriation. Air elutriation tests had been conducted with specific feed rates as high as 600 (lb/h)/ft^2 [2,929 (kg/h)/m^2]. This compares with a maximum of 90 (lb/h)/ft^2 [439 (kg/h)/m^2] for foam elutriation.

Experiments were performed to determine if foam elutriation would reject contaminants from the air elutriation overflow. The hope was to reject the fine iron present in the air overflow in order to decrease acid consumption during leaching. Air elutriation overflow produced at 9 ft/s (2.7 m/s) was used as foam elutriation feed. Results from a test are listed in table 6. Visual inspection and chemical analysis of the foam elutriation tailings showed that fine iron present in the feed was rejected to the tailings.

Table 5.—Comparison of composition of foam and air elutriation products

	Foam[1]	Air[2]
Composition, pct:		
Al	0.27	0.32
C	55.6	38.9
Ca	6.8	12.9
Fe	18.6	21.4
Mg	2.0	2.8
Mn	0.25	0.32
SiO_2	4.2	4.5
Percent of feed resulting as product	21.1	27.2

[1]Tetradecyltrimethyl ammonium bromide at 70 g/t, kerosene at 90 g/t, feed rate at 90 (lb/h)/ft^2 [439 (kg/h)/m^2].

[2]Air velocity at 9.0 ft/s (2.74 m/s), feed rate at 410 (lb/h)/ft^2 [2,001 (kg/h)/m^2].

Use of air elutriation to process the raw kish followed by foam elutriation of the air overflow resulted in cleaner material going to acid leaching and alleviated the problem of low specific feed rate through the foam column because the foam column treats less than one-third of the initial feed material. Chemical analysis of minus 100-mesh air elutriation overflow showed that it would be impractical to leach this size fraction. Removal of the minus 100-mesh air elutriation overflow before the foam elutriation column would result in even less material to be handled by the foam column and a cleaner foam concentrate to go to leaching. Table 7 lists results for a test in which 9.0 ft/s (2.7 m/s) air elutriation overflow was screened at 100 mesh and the plus 100-mesh material was used as feed for foam elutriation. The combination of air elutriation, screening of the air column overflow at 100 mesh, and feeding the plus 100-mesh material to foam elutriation resulted in a concentrate with 62 pct C. The weight of the foam concentrate represented 12 pct of the initial minus 6-mesh air elutriation feed.

Table 6.—Results from foam elutriation test using air elutriation overflow as feed[1]

	Wt pct	Chemical analysis, pct						
		Al	C	Ca	Fe	Mg	Mn	SiO_2
Feed	100.0	0.3	40.0	9.5	21.9	2.8	0.4	4.4
Foam concentrate	82.8	0.3	47.1	8.4	18.2	2.4	0.3	4.0
Foam tailings	17.2	0.5	5.8	14.5	39.8	4.7	0.6	6.5

[1]Tetradecyltrimethyl ammonium bromide at 50 g/t, kerosene at 50 g/t, feed rate at 31 (lb/h)/ft^2 [151 (kg/h)/m^2].

Table 7.—Results from foam elutriation test using plus 100-mesh air elutriation overflow as feed[1]

	Wt pct	Chemical analysis, pct						
		Al	C	Ca	Fe	Mg	Mn	SiO_2
Feed	100.0	0.2	52.9	6.1	19.4	1.7	0.3	4.3
Foam concentrate	83.4	0.2	62.2	5.0	15.5	1.2	0.2	3.4
Foam tailings	16.6	0.5	6.3	11.5	38.7	4.0	0.6	9.1

[1]Tetradecyltrimethyl ammonium bromide at 50 g/t, kerosene at 50 g/t, feed rate at 31 (lb/h)/ft^2 [151 (kg/h)/m^2].

HYDRAULIC CLASSIFICATION

A series of tests was performed to determine if hydraulic classification could adequately separate flake graphite from raw kish. Tests were made with a laboratory model of a patented device manufactured by Krebs Engineers with the trademark of Whirlsizer.[5] The device is a water elutriation column with an additional low-velocity cyclone action for improved efficiency. Performance is controlled by variation of waterflows at two input points and two output points. Elutriation and dilution water are both input streams; and the top-bottom output split is controlled by throttling the underflow. Operation of the Whirlsizer classifier with raw kish feed resulted in a graphite-rich overflow product and an iron-rich underflow tailing. The flow rates reported refer to a 3.25-in (8.3-cm) ID Whirlsizer classifier.

Initial tests determined the best flow rates for processing minus 6-mesh kish to be 2.0 gal/min (7.6 L/min) for dilution water, 1.5 gal/min (5.7 L/min) for elutriation water, and 0.5 gal/min (1.9 L/min) for underflow water. Sieve sizing and chemical analysis of the overflow product led to the decision to discard the portion passing through a 100-mesh screen. The effects of varying kish feed rate were also evaluated. The test results, listed in table 8, show that the Whirlsizer classifier produced, in one step, a concentrate comparable to that from both air and foam elutriation processing. The feed rate of 30 lb/h (13.6 kg/h) corresponds to a specific feed rate of 525 (lb/h)/ft^2 [2,563 (kg/h)/m^2], which is very close to the amount of kish handled by the air elutriation column.

Chemical analysis of the size fractions from the classifier overflow product showed that contaminant content increased with decreasing particle size. Further tests were conducted using the minus 50- plus 100-mesh fraction of the primary classifier overflow as feed material to determine if reprocessing this fraction would reject additional contaminants. Results from these tests are listed in table 9. Best conditions for reprocessing minus 50- plus 100-mesh primary classifier overflow were elutriation water flow rate of 1.0 gal/min (3.8 L/min), dilution water at 1.5 gal/min (5.7 L/min), and underflow at 0.5 gal/min (1.9 L/min). These conditions represent the best compromise between carbon recovery, contaminant rejection, and product grade.

Table 8.—Effect of feed rate on grade and recovery for Whirlsizer classifier overflow product[1]

Feed rate, lb/h	Portion of feed as plus 100-mesh overflow, wt pct	Chemical analysis of plus 100-mesh overflow, pct			
		C	Ca	Fe	SiO_2
62	11.7	61.0	5.5	13.1	4.2
43	16.3	62.7	5.4	12.3	4.4
30	17.5	63.6	5.1	12.0	4.3

[1]Feed material: minus 6-mesh kish. Classifier waterflow parameters: velocity water 1.5 gal/min, feed water 2.0 gal/min, underflow water 0.5 gal/min (5.7, 7.6, 1.9 L/min).

Combining the plus 50-mesh primary overflow with the secondary overflow from retreating the minus 50- plus 100-mesh primary overflow resulted in material for acid leaching that was 70 pct C. Table 10 compares the composition of these two separate products, the combined classifier product, and the concentrate produced by combined air-foam elutriation processing. Concentrate from the two-stage Whirlsizer classifiers requires 34 pct less acid to remove the remaining impurities than does the product of combined air and foam elutriation.

[5]Reference to specific products does not imply endorsement by the U.S. Bureau of Mines.

Table 9.—Results from reprocessing minus 50- plus 100-mesh primary Whirlsizer classifier overflow[1]

Waterflow, gal/min			Chemical analysis of overflow, pct		Portion of minus 50- plus 100-mesh feed as overflow, wt pct		
Velocity	Dilution	Underflow	C	Fe	Feed	C	Fe
2.5	2.5	0.5	52.1	19.1	93.6	96.5	88.4
2.0	2.5	0.5	54.0	18.1	90.0	94.8	80.6
1.5	2.0	0.5	52.9	17.0	85.4	92.0	73.6
1.0	2.0	0.5	59.7	14.7	74.6	87.2	54.4
1.0	1.5	0.5	65.8	12.2	64.8	81.8	38.9
0.5	2.0	0.5	69.3	10.8	53.3	68.4	32.0

[1]Average feed rate of 17 lb/h [290 (lb/h)/ft^2], 1 gal/min (3.78 L/min).

Table 10.—Composition of plus 100-mesh feed for acid leach circuit

Fraction	Chemical analysis, pct							Portion of minus 6-mesh feed going to acid leach, wt pct
	Al	C	Ca	Fe	Mg	Mn	SiO_2	
Plus 50-mesh primary classifier overflow	0.14	74.3	3.8	8.0	1.0	0.11	2.9	6.3
Minus 50- plus 100-mesh secondary classifier overflow	0.20	65.8	4.7	12.2	2.0	0.19	3.1	5.0
Combined classifier feed to acid leach	0.17	70.1	4.2	9.8	1.4	0.15	3.0	11.3
Combined air and foam column feed to acid leach	0.20	62.2	5.0	15.5	1.2	0.20	3.4	11.9

CHEMICAL PURIFICATION

Physical beneficiation of kish resulted in a graphite concentrate with a carbon content of 70 pct, with most of the contaminants present either as discrete grains locked within the graphite flakes or as compounds intercalated between the graphite planes. While this material may be used in some applications, most uses of flake graphite require a minimum purity of 85 pct, and many high-value applications need material with purities of 95 pct or greater. Chemical purification involving acid leaching is the most practical way of removing contaminants from the concentrate while preserving flake size.

ACID LEACHING

Sulfuric acid leaching was examined first. Preliminary experiments showed that sulfuric acid could leach most of the contaminants from kish graphite, but the calcium present reprecipitated as gypsum ($CaSO_4 \cdot 2H_2O$) onto the graphite. Precipitation of gypsum resulted in a product of only 88 pct C. Experiments using H_2SO_4 were discontinued at this point.

Leaching experiments were next conducted with HCl. Preliminary experiments showed that (1) HCl leaching could produce a graphite product of 95 pct C, (2) flake graphite had a natural tendency to float to the liquid surface, and (3) generation of H_2S and CO_2 gas bubbles attaching to graphite flakes increased the problem of flakes floating to the surface.

Column leaching was the method selected to overcome flake flotation and to minimize flake attrition. Experiments were conducted in 4-in-diam by 12-in-tall plastic columns. Acid solution was pumped up through the bottom of the kish-graphite-filled column. Unexpected problems of high pressure drop through the bed were encountered immediately. As leaching proceeded, column pressure drop increased until the tests were aborted when pump limits were exceeded. Apparently, the compressibility of the graphite bed, coupled with reprecipitation of metal hydroxides as the initial acid was exhausted, caused excessive restriction of flow. These problems were not evident in the preliminary column leaching tests, which were performed at a smaller scale.

Further leaching tests were performed using vessels fabricated from plastic 2-gal (7.6-L) bottles with internal paddles. The vessels were inclined and rotated at 25 rpm to produce an action similar to that of a concrete mixer. This configuration gave adequate agitation, allowed H_2S to escape, and did not cause excessive attrition. Two-stage

countercurrent tests were performed using 1.5 kg of kish as feed. Acid stoichiometry was calculated based on Al reacting to form trivalent ions, and Ca, Fe, Mg, and Mn reacting to form divalent ions. The leachant was 120 pct stoichiometric HCl with 65 pct of the total added in the first stage and 35 pct in the second stage. Pulp density in the vessel was 33 pct solids. Each of the two stages was 2 h long. Leaching kish graphite using these conditions resulted in a 95- to 97-pct-C product. Table 11 lists a typical analysis for HCl-leached kish graphite. This material is of sufficient purity for the great majority of graphite applications. There are, however, small-volume end uses that require higher purity and are able to bear the cost of further processing.

Table 11.—Analysis of HCl-leached kish graphite, percent

C	97.4
Ca	0.1
Fe	0.2
Mg	0.1
SiO_2	2.2

[1]Leaching conditions: 2 stages, 2 h per stage, 120 pct stoichiometric HCl.

The contaminants remaining in the graphite after HCl leaching were major silica and minor silicates of Ca, Fe, and Mg. Acid fluoride leachants were studied for silica removal. In initial tests, solutions of HCl-KF were tried and found to be ineffective in removing silica, probably owing to reprecipitation of K_2SiF_6.

Tests were next performed using HF. Experiments showed that a single 2-h leach of the 95-pct-C graphite using 120 pct stoichiometric HF at a pulp density of 33 pct solids was sufficient to produce a 99-pct-C product. Stoichiometry was based on SiO_2 reacting to form H_2SiF_6. The overall HCl-HF leaching procedure resulted in a product that was 99 pct C, 0.4 pct SiO_2, and 0.1 pct Fe. Other contaminants, such as Al, Ca, and Mg, were in the 200- to 700-ppm range.

GRAPHITE WASHING AND DEWATERING

Tests were conducted to determine the minimum amount of water needed to wash the HCl-leached kish in a simulated four-stage countercurrent washing operation. The first test used 4 mL H_2O per gram of wet kish in each washing stage. The wet kish was at 50 pct solids. Washing easily removed dissolved salts, but later calculations showed that this amount of wash water would create an unreasonably large amount of waste water that would require evaporation or treatment before disposal. Additional tests were performed using stage volumes of 2.0 and 1.5 mL H_2O per gram of wet kish. Table 12 shows residual concentrations after four stages for all three wash tests. The test using 1.5 mL H_2O per gram of wet kish resulted in kish that was well washed while also reducing the amount of waste water to be treated.

Table 12.—Results from four-stage countercurrent washing of acid-leached kish

Stage volume, mL H_2O per g wet kish	Residual solution concentration, ppm					pH
	Ca	Fe	Mg	Mn	[1]Cl^-	
4.0	9.9	<1	<3	<0.02	<0.01	6
2.0	13	6.4	3.0	0.1	<0.01	6
1.5	16	11	4.0	0.2	0.06	5

[1]Grams per liter.

Dewatering the concentrate going to acid leaching is also important in order to decrease the amount of water that will subsequently need to be treated. The first tests conducted were vacuum filter leaf tests. Data from these tests showed that filtration rates of greater than 2 (gal/min)/ft^2 [1.4 (L/s)/m^2] and a filter cake of 50 pct solids could be achieved using a pressure differential of 50 torr.

Centrifugation tests were made with a 60-mesh screen cloth placed inside the bowl of a laboratory centrifuge for dewatering plus 100-mesh kish concentrate from the Whirlsizer classifier. Even though the screen openings were larger than the finest particles to be retained, losses were approximately 0.4 pct of the feed material. The dewatered centrifuge product was 78 pct solids.

SPENT ACID TREATMENT

The spent solution from HCl leaching was at pH 2 to 3 and contained approximately 25 g/L Ca, 57 g/L Fe, 8 g/L Mg, and lesser amounts of Al, Mn, P, and Si. Total chloride content was 210 g/L. The iron content of fresh solutions was essentially all in the ferrous state. This solution must, of course, be treated before discharge, and several alternatives were studied in the laboratory-scale investigation.

Neutralization by direct addition of lime was effective in precipitating the dissolved metals and resulted in a brine from which $CaCl_2$ with purity greater than 99 pct could be crystallized. Lime neutralization was very slow, however, requiring 2 to 4 h depending on agitation rate. The long reaction time allowed a substantial amount of the dissolved ferrous iron to be oxidized to the ferric state, which gave rise to large quantities of ferric hydroxide in the precipitate. The precipitates were extremely difficult to filter. Increasing agitation rate to speed up the neutralization

reaction also increased aeration and only worsened the oxidation problem.

The minus 100-mesh material discarded from physical beneficiation operations contains a high proportion of lime-rich slag and free lime. This material, which we called basic fines if from the dry air elutriation column or basic slimes if from the wet Whirlsizer classifier, was also tried as a neutralizer for spent leach liquor. The neutralization reaction was complete in only 30 min with moderate agitation, and the precipitate filtered easily. Filtrate after precipitation contained only Ca^{2+} and Cl^-. Levels for Fe, Mg, and Mn were below the detection limits of 3, 5, and 0.05 ppm, respectively. The presence of finely divided metallic iron in the basic slimes apparently keeps the solution reduced to the ferrous state, and the fine graphite and the colloidal silica released by reaction of the slag particles act as nucleation centers, filtering aids, and flocculants to give a faster and cleaner precipitation than does pure lime.

Washing and filter tests were performed on the hydroxide precipitate from neutralization with basic slimes. A 3.75-in (9.5-cm) diameter leaf filter was connected to an adjustable vacuum system. The leaf was placed in the precipitate, and the vacuum was turned on at a preset level for a specific period of time. After formation of the filter cake, the leaf was placed in clean water in order to test the washability of the cake. The amount of chloride in the wash solution and the final washed filter cake was of major concern. Data from the filtration and washing tests are listed in tables 13 and 14, which show that a 15- or 20-s form time gives good overall results with regard to filtration rates and washing efficiency.

Table 13.—Data from filtration of iron-kish precipitate[1]

Filter cake form time, s	10	15	20	30
Dry cake formation rate, (lb/h)/ft^2	244.1	291.1	251.8	351.2
Cake thickness, mm	4	7	10	19
Percent solid of wet cake	44.7	47.3	47.3	51.9
Filtration rate, (gal/h)/ft^2:				
Cake formation	32.1	26.3	24.1	16.1
1st wash	23.5	27.7	38.1	14.3
2d wash	25.1	36.2	53.9	16.1

[1]Pressure differential during tests, 150 mm Hg; filter medium, Eimco POPR-929M.

Table 14.—Chloride ion distribution data from filtration of iron-kish precipitate

Filter cake form time, s	10	15	20	30
Distribution of chloride ion, pct:				
1st wash, 45 s	90.7	90.0	91.1	39.1
2d wash, 30 s	2.3	5.0	4.2	26.4
Dried filter cake	7.0	5.0	5.6	34.6
Chloride analysis of dried cake, pct	1.0	0.7	0.7	3.7

The filtrate from neutralization was a clean solution that could be evaporated to crystallize $CaCl_2$, a potentially salable byproduct. The remaining liquor could then be recycled to the leaching circuit, where fresh HCl solution is made up. An alternative method for handling the brine is adding concentrated sulfuric acid to regenerate the HCl leaching solution and removing calcium as precipitated gypsum ($CaSO_4 \cdot 2H_2O$). The gypsum is also potentially salable, but if a market cannot be found, it is much easier to dispose of than the $CaCl_2$. This method was studied by adding, over a 10-min period, a stoichiometric quantity of sulfuric acid to 30-pct $CaCl_2$ solution while stirring constantly. The reaction proceeded smoothly, yielding a free-flowing, bright white precipitate with greater than 99-pct purity. The filtrate contained 23 pct HCl and 0.61 pct residual $CaCl_2$. The filtration and washing characteristics were evaluated using the same equipment and procedure as for the neutralization precipitate.

Table 15 lists results from the gypsum filtration and washing tests. Table 16 lists the chloride ion distribution data from the washing portion of the tests. The data show that the precipitated $CaSO_4$ filters extremely fast and washes quickly. The form time for filtration ranged from 2 to 5 s. The second wash solution for the 5-s form time test had a chloride ion content of 0.19 g/L.

Table 15.—Data from filtration of $CaSO_4$ precipitate[1]

Filter cake form time, s	5	10
Dry cake formation rate, (lb/h)/ft^2	659.1	473.7
Cake thickness, mm	21	22
Percent solid of wet cake	28.0	31.6
Filtration rate, (gal/h)/ft^2:		
Cake formation	113.6	59.3
1st wash	62.8	83.2
2d wash	197.6	210.0

[1]Pressure differential during tests, 150 mm Hg; filter medium, Eimco POPR-913F.

Table 16.—Chloride ion distribution data from filtration of $CaSO_4$ precipitate

Filter cake form time, s	5	10
Distribution of chloride ion, pct:		
1st wash, 45 s	96.4	76.2
2d wash, 30 s	3.5	22.2
Dried filter cake	<0.01	1.6
Chloride analysis of dried cake, pct	<0.01	0.58

SOLID WASTES AND BYPRODUCTS

The solid materials rejected from laboratory operations have not been studied in sufficient detail to determine their potential marketability or suitability for disposal. Some observations were made, however, that should be of

use in planning further work on these materials. The major solid waste is rejected from the first stage of graphite beneficiation, e.g., the primary Whirlsizer classifier underflow. This material is primarily a physical mixture of granular iron and slag with an iron content of about 65 pct. It should be suitable for landfill, the current disposal practice for the raw kish. It may also have value as a cast iron source, particularly for small foundry operations if the slag is removed. Simple magnetic separation should give clean iron in a form that is easily handled.

The iron-rich hydroxide sludge from neutralization of spent HCl leach liquor does not contain high levels of any particularly toxic compounds, but its stability to ground water leaching was not studied. It is interesting that the ferrous hydroxide oxidizes on standing and causes the entire mass to set like portland cement. It is worth investigating the possibility that the hydroxide sludge could be used as a briquetting cement for the iron from Whirlsizer classifier underflow, as well as for the larger iron particles rejected by initial screening. If sufficiently strong briquettes could be made with a suitable composition, it is possible that essentially all the iron content of the raw kish could be returned to the blast furnace.

Depending on how the $CaCl_2$ brine is handled, either solid calcium chloride or gypsum could be produced. Both would be greater than 99 pct pure, and both are potentially marketable as byproducts. Failure to find an outlet means, of course, that they would become wastes. The gypsum is relatively inert and insoluble and may be disposable by landfill; calcium chloride, on the other hand, is quite soluble and would require more expensive special handling.

An additional solid waste is the calcium fluosilicate precipitate that would result from neutralization of the spent HF leach solutions. This material is relatively insoluble and is generated in small quantity. Further study is required to determine final disposition.

EVALUATION OF GRAPHITE PRODUCTS

Graphite from kish looks quite similar to good-quality natural flake graphite. Kish graphite tends to be brighter, with smoother, more reflective surfaces. The range of flake sizes available from kish is comparable to that of the natural mineral; in fact, small quantities of flakes as large as 1/2 in (1.3 cm) are recoverable from kish, but are extremely rare in natural graphite. The chemical purity of graphite products from kish is also comparable to that of natural graphite products.

One distinctive difference in kish graphite is its crystallinity. Examination of various graphites by X-ray diffraction showed graphite from kish often exhibited sharper, narrower peaks is the diffraction pattern. The width of diffraction peaks is an indication of the degree of crystallinity, with narrow peaks resulting from more perfect crystals. Better crystallinity implies better electrical and thermal conductivity, which are important properties in a large number of end uses for graphite. Once kish graphite becomes commercially available from a stable source, much work remains to be done in fundamental characterization of its chemical and physical properties in comparison to those of natural graphites.

Ultimately, the suitability of any particular graphite for a specific end use must be determined by performance testing in actual use. The graphite market is extremely complex, with hundreds of end uses, and broad specifications for chemical and physical properties are not meaningful. Samples of kish graphite were supplied to more than 20 industrial graphite users, both directly and through distributors. The consensus of results from their initial evaluations for a wide variety of applications was that kish graphite performs at least as well as the natural mineral. Many users also expressed the need for larger samples for full evaluations.

A pilot plant is needed to generate enough kish graphite for a complete evaluation of the material, to optimize the individual process operations, and to provide engineering data for a realistic appraisal of process costs. The final task of the kish research project was to bring together the results of experimental work into an integrated design for a pilot-scale kish-processing facility that would meet those requirements.

PILOT PLANT DESIGN

A preliminary design was completed for a 1-st/d pilot plant to be constructed at or near an operating steel plant. Based on the laboratory work described above, the purpose of the design was to estimate the size of process equipment and the quantities of feed and intermediate materials, reagents, and wastes to be handled in such a plant. The design feed material was minus 6-mesh skimmed kish with a free graphite content of 12.6 pct. In the following description, stream numbers refer to the detailed material balance and schematic flowsheets presented in appendixes A and B.

BASIS

The basis for design of the proposed pilot plant is 2,000 lb/d of graphite product analyzing 98 pct C. For purposes of cost evaluation, the pilot plant data should be extrapolated to a practical production plant at a medium-size steelworks with an output of 5,000 to 10,000 lb/d of graphite. For a centralized graphite plant processing kish from more than one steelworks, a larger scale would be practical.

CONCENTRATOR SECTION

Concentration consists of particle sizing and two-stage wet gravity separation utilizing Whirlsizer classifiers. Additional wet screening and centrifugation remove fine particles and water from the graphite concentrate.

Raw kish is dry-screened at 6 mesh, and the oversize, which contains a large quantity of recyclable iron, is rejected. The minus 6-mesh fraction contains 13 pct free graphite and is the plant feed, **stream A1**, which is volumetrically fed to a mixing cone where it is combined with water to form the slurry feed, **stream A3**, for the rougher classifier.

Heavy iron and slag particles exit the bottom of the rougher as a slurry, which passes across a sieve bend for dewatering. The solids are rejected as **stream A5**, and underflow water, **stream A6**, is recycled to the rougher classifier.

The rougher overflow slurry, with solids containing 48 pct free graphite, is split on a double deck wet screen at 50 and 100 mesh. The plus 50-mesh fraction, **stream A7**, passes directly to concentrate dewatering. The intermediate size fraction, **stream A8**, goes to the cleaner classifier for additional concentration, and the minus 100-mesh material, **stream A9**, is sent to the slimes thickener. Cleaner overflow, **stream A13**, is combined with coarse rougher concentrate and is dewatered on a sieve bend to **stream A14** with 54 pct solids, then centrifuged to the final concentrate, **stream A21**, with 80 pct solids, which have a free-graphite content of 70 pct. Cleaner underflow, **stream A12**, is returned to the rougher.

Fine particles from the double-deck wet screen and from concentrate dewatering contain a high proportion of free lime. This material is collected in the slime thickener and passes as **stream A20** to the waste treatment section. The clarified thickener overflow is recirculated to the classifiers.

LEACHING SECTION

HCl Leaching

Leaching of the concentrate with HCl is a three-stage countercurrent operation that runs for 20 h/d. Cycle time for each leaching stage is 2 h, with net residence time of 1.5 h. The leaching vessels are constructed of fiber-reinforced plastic or rubber-coated steel. Their shape and operation are similar to those of a concrete mixer. A 3.3-ft-diam by 4.5-ft-long cylindrical body (38.5-ft^3 volume) with a domed bottom and a truncated cone top section 1 ft long with a 1.5-ft-diam opening is rotated during leaching at 5 to 10 rpm about its axis, which is inclined 37° from the horizontal. Excessive agition and aeration must be avoided to prevent oxidation of dissolved iron to ferric chloride. At the conclusion of each leaching stage, a 50-mesh plastic screen is clamped to the top opening, and the vessel is tilted to drain the liquor. The vessel is then returned to the leaching position, the screen is removed, next-stage liquor is added, and leaching continues. By transferring only the liquor from vessel to vessel, unnecessary degradation of graphite flake is avoided. Although the flowsheet indicates that solids pass through each vessel in turn, that is only a schematic representation of the way the process operates. In actuality, once the solids are loaded into a particular vessel, they remain there until removed for final washing.

In practice, a batch of feed, **stream B1**, is loaded into a leach vessel. Liquor **stream B2A** from the just-completed second-stage leach is added, along with 25-pct HCl, **stream B2**, and first-stage leaching commences. At the end of the cycle, the vessel is drained, with liquor **stream B6** going to the waste treatment section. Liquor **stream B3A** from third-stage leaching is now added to the vessel along with 25-pct HCl, **stream B3**, and the second-stage leaching cycle begins. At the end of that cycle, the vessel is again drained, with the liquor, now **stream B2A**, passing to the new first-stage vessel.

The third-stage leaching cycle is actually a preliminary washing step to remove most of the soluble chlorides formed in the first- and second-stage leaches. The solid is agitated with used wash water, **stream B4A**, from the final washing operations. After this cycle, drained liquor, **stream B3A**, is passed back to the new second-stage vessel, and the solids are washed from the vessel as **stream B4B** into a batch-type basket centrifuge with a 60-mesh screen. Additional wash water is sprayed into the centrifuge. The final product of HCl leaching, **stream B5**, contains 20 pct moisture, and its grade, on a dry basis, is 95 pct graphite. If this material is the desired final product, it passes directly to the dryer. For higher purity graphite, the product of HCl leaching passes to an optional HF leaching section.

HF Leaching (Optional)

For greater than 95-pct purity, product B5 from HCl leaching becomes **stream C1** and is releached with an HF solution in an operation with two leaching stages and a final washing and dewatering stage. The leaching vessels

are smaller at 2.7-ft diam by 3.5 ft long; otherwise operation is the same as for HCl leaching. The product, **stream C4**, is 98- to 99-pct-pure graphite with 20 pct moisture. Spent acid **stream C5** and vapor **stream C6** from the leaching vessels pass to the waste treatment section.

Drying

Products of leaching contain 20 pct moisture. They are sent as **stream F1** to a rotary or tray dryer to produce the final products, **stream F4**. Assuming air entering at 400 °F as **stream F2** and exiting at 200 °F as **stream F3**, and an overall efficiency of 60 pct, the heat requirements are 2.1 million Btu per short ton of graphite product.

WASTE TREATMENT SECTION

HCl Recovery

Waste acid from HCl leaching, **stream D1**, is combined with the high-lime thickener underflow, **stream D2**, and agitated for 1 h. All chloride is converted to soluble $CaCl_2$, and all metals other than Ca are precipitated as hydroxides. Aeration of the slurry must be minimized to ensure a filterable ferrous hydroxide solid. The slurry is dewatered and washed on a belt filter, and the wash water is added to the filtrate. The hydroxide cake, **stream D4**, is sent to disposal.

The clarified $CaCl_2$ solution must be concentrated to maintain the water balance in the leaching circuit. A vertical tube evaporator is used to give a final concentration of 31 pct $CaCl_2$ in **stream D5**. The concentrated $CaCl_2$ solution passes to a second agitated tank, where it is reacted with sulfuric acid, **stream D7**, to precipitate gypsum and regenerate HCl for recycle. The slurry is dewatered and washed on a belt filter to give a pure gypsum cake, **stream D9**. The clean HCl filtrate is brought up to required strength with makeup **stream D10** and recycled to the leaching section as **stream D11**.

Vapor Scrubber

HCl leaching of kish produces H_2S and some HCl vapor, so the leach reactors must be vented through a scrubber. Vapor from HF leaching vessels is also scrubbed with the same unit. Funnel-shaped hoods over each of the leach vessels are connected with flexible ducts to a central air pipe, which carries about 140 ft^3/min (**stream E1**) through the scrubber. Laboratory operation has shown that a 10-pct solution of soda ash circulating through a scrubber packed with 1- to 2-in plastic rings or saddles effectively removes H_2S and HCl. Turnkey scrubber systems are also available that guarantee compliance with emissions standards.

Fluoride Disposal

Waste acid from HF leaching, **stream D20**, is neutralized with lime and filtered to give a stable solid containing primarily calcium fluosilicate, **stream D22**, for disposal.

DESIGN SUMMARY

The preliminary pilot plant design for treating skimmed kish utilizes simple equipment for physical beneficiation, acid leaching, and waste treatment. The gravity concentrator section for beneficiation uses hydraulic classifiers for high throughput with low labor requirements. A concentration factor of 5.5 is achieved to give a final concentrate with 70 pct graphite. Recovery of free graphite is somewhat arbitrarily set at 64 pct by the choice to reject the minus 100-mesh fraction of the classifier overflow products. The final choice of reject screen size will require an evaluation of the tradeoff between the increasing cost for acid leaching a more impure concentrate with finer graphite and the decreasing value of the smaller particles in the final product.

Acid leaching requires approximately 0.4 lb of HCl to produce 1 lb of graphite with 95-pct purity. In late 1993 prices, that amounts to a primary reagent cost of $0.044/lb of product. Additional treatment to make product with 98- to 99-pct purity would consume 0.04 lb HF per pound of graphite at a cost of $0.030. Values of flake graphite vary tremendously depending on flake size, purity, and user-specific properties, but the range of industrial user prices for 95-pct-pure graphite is about $0.20 to $0.60/lb; for high-purity material, the range is $0.50 to over $1.00/lb.

The primary wastes from kish processing are the high-iron solids from the concentrator, the hydroxide cake from neutralization of spent HCl leaching solution, gypsum cake from HCl regeneration, fluoride cake from neutralization of spent HF, and sulfide waste from the vapor scrubber. For each 2,000 weight units of graphite product, 20,000 units of concentrator tailings contain about 14,000 units of granular pig iron that may be salable as foundry feed if slag is removed by magnetic separation. It could also be returned to the blast furnace if treated in a sinter plant or briquetted as mentioned above. The hydroxide cake contains 2,225 units of solids that should be stable in a landfill, as should the 1,950 units in the gypsum cake. Further work is required to determine the best methods for disposing of the fluoride- and sulfide-containing solids, which total 328 units.

CONCLUSIONS

The technical feasibility of producing high-quality flake graphite from steelmaking kish has been demonstrated. Graphite can be produced that exceeds the requirements of essentially all applications of the natural mineral. The simplicity of processing indicates that kish graphite may also be price competitive with natural graphite; reliable economic evaluation must, however, await the results of pilot-scale studies. The size of the kish resource is more than sufficient to meet foreseeable demand for flake graphite.

This investigation shows the possibility of reversing the present position of the United States from being totally dependent on foreign sources for a strategic and critical mineral to becoming a net exporter of graphite with improved quality and a stable supply.

APPENDIX A.—MATERIAL BALANCE FOR KISH PROCESS

Concentrator Section

Stream	A1 Sized kish	A2 Makeup water	A3 Rougher feed	A4 Rougher velocity water	A5 Rougher tailings	A6 Sieve bend effluent	A7 Coarse con-centrate	A8 Rougher midsize	A9 Rougher slimes	A10 Cleaner feed	A11 Cleaner velocity water	A12 Cleaner under-flow
Composition, lb:												
Free graphite	3,182		3,363		472		1,195	1,018	677	1,018		181
Other C	758		767		713		7	18	30	18		10
Fe	13,787		13,979		12,904		130	349	596	349		192
CaO	2,449		2,552		1,970		86	187	309	187		102
SiO_2	2,323		2,369		2,109		47	86	128	86		46
MgO	682		718		482		27	79	130	79		36
S	960		971		857		3	32	78	32		11
HCl												
$FeCl_2$												
$CaCl_2$												
$MgCl_2$												
H_2S												
$Fe(OH)_2$												
$Ca(OH)_2$												
$Mg(OH)_2$												
H_2SO_4												
$CaSO_4$-$2H_2O$												
HF												
F (sol salts)												
$CaSiF_6$-$2H_2O$												
CaF_2												
Na_2CO_3												
H_2O (free)		20,731	864,233	648,175	14,466	201,592	1,170	1,557	1,293,622	82,209	54,798	27,411
Air												
Other	1,111		1,231		469		122	214	425	213		119
Total	25,252	20,731	890,183	648,175	34,444	201,592	2,787	3,539	1,295,996	84,191	54,798	28,108
Wt of solids lb	25,252	0	25,950	0	19,977	0	1,617	1,982	2,374	1,982	0	698
Pct solids	100.0	0.0	2.9	0.0	58.0	0.0	58.0	56.0	0.2	2.4	0.0	2.5
Specific gravity	1.50	1.00	1.02	1.00	1.89	1.00	1.53	1.56	1.00	1.02	1.00	1.02
Density lb/ft^3	93.6	62.4	63.8	62.4	117.9	62.4	95.3	97.6	62.5	63.4	62.4	63.5
Flow gal/min		1.7	72.4	54.0		16.8			107.8	6.9	4.6	2.3

Concentrator Section—Continued

	A13 Cleaner over-flow	A14 Wet concen-trate	A15 Sieve bend effluent	A16 Centri-fuge effluent	A17 Thickener feed	A18 Cleaner recycle	A19 Rougher recycle	A20 Thickener underflow	A21 Final concen-trate
Conposition, lb:									
Free graphite	837	2,032			677			677	2,032
Other C	8	15			30			30	15
Fe	157	287			596			596	287
CaO	85	171			309			309	171
SiO_2	39	86			128			128	86
MgO	43	70			130			130	70
S	15	19			78			78	19
HCl									
$FeCl_2$									
$CaCl_2$									
$MgCl_2$									
H_2S									
$Fe(OH)_2$									
$Ca(OH)_2$									
$Mg(OH)_2$									
H_2SO_4									
$CaSO_4$-$2H_2O$									
HF									
F (sol salts)									
$CaSiF_6$-$2H_2O$									
CaF_2									
Na_2CO_3									
H_2O (free)	109,596	2,471	108,295	1,746	1,403,664	1,262,675	135,450	5,539	725
Air									
Other	101	223			425			425	223
Total	110,881	5,372	108,295	1,746	1,406,038	1,262,675	135,450	7,913	3,626
Wt of solids lb	1,284	2,901	0	0	2,374	0	0	2,374	2,901
Pct solids	1.2	54.0	0.0	0.0	0.2	0.0	0.0	30.0	80.0
Specific gravity	1.01	1.48	1.00	1.00	1.00	1.00	1.00	1.26	1.25
Density lb/ft^3	62.8	92.6	62.4	62.4	62.5	62.4	62.4	78.8	78.0
Flow gal/min	9.2		9.0	0.1	116.9	105.1	11.3	0.5	

Leaching Section

Stream	B1 HCl leach feed	B2 1st HCl addition	B2A Liquor to 1st HCl	B2B Solid from 1st HCl	B3 2d HCl addition	B3A Liquor to 2d HCl	B3B Solid from 2d HCl	B4 HCl leach wash	B4A Liquor to 3d HCl	B4B Solid from 3d HCl	B5 HCl leach product	B6 HCl leach spent acid
Composition, lb:												
Free graphite	2,032		22	2,031		20	2,029		18	2,027	2,009	23
Other C	15		12	14		11	12		10	11	2	13
Fe	287			144			5			3	3	
CaO	171			9			1			1	1	
SiO_2	86		27	60		11	44		1	35	33	53
MgO	70			3			1			1	1	
S	19			10			1					
HCl		518	99	24	279	12	21		18	19	1	71
$FeCl_2$		10	534	220	3	186	188		162	171	6	639
$CaCl_2$			130	116		99	99		89	90	1	336
$MgCl_2$			61	56		48	48		43	44	1	163
H_2S												
$Fe(OH)_2$												
$Ca(OH)_2$												
$Mg(OH)_2$												
H_2SO_4												
$CaSO_4$-$2H_2O$												
HF												
F (sol salts)												
$CaSiF_6$-$2H_2O$												
CaF_2												
Na_2CO_3												
H_2O (free)	725	1,590	5,106	1,934	856	3,927	1,654	2,788	3,780	1,504	512	5,611
Air												
Other	223			111			56			28	27	
Total	3,626	2,119	5,991	4,732	1,138	4,314	4,161	2,788	4,121	3,933	2,596	6,908
Wt of solids lb	2,901	0	61	2,382	0	42	2,150	0	29	2,105	2,075	89
Pct solids	80.0	0.0	1.0	50.3	0.0	1.0	51.7	0.0	0.7	53.5	79.9	1.3
Specific gravity	1.25	1.10	1.22	1.23	1.10	1.05	1.21	1.00	1.00	1.20	1.20	1.40
Density lb/ft^3	78.0	68.6	76.1	76.8	68.6	65.5	75.5	62.4	62.4	74.9	74.9	87.4

Leaching Section—Continued

	B7 HCl leach vapor	C1 HF leach feed	C2 HF leach conc acid	C2A Liquor to 1st HF	C2B Solid from 1st HF	C3 HF leach wash	C3A Liquor to 2d HF	C3B Solid from 2d HF	C4 HF leach product	C5 HF leach spent acid	C6 HF leach vapor	F1 Dryer feed
Composition, lb:												
Free graphite		2,009		7	1,999		2	1,994	1,992	17		1,992
Other C		2		1	1			1		1		
Fe		3			1			1	1			1
CaO		1										
SiO_2		33			7			5	5			5
MgO		1										
S												
HCl	7	1								3		
$FeCl_2$		6										
$CaCl_2$		1										
$MgCl_2$		1										
H_2S	20											
$Fe(OH)_2$												
$Ca(OH)_2$												
$Mg(OH)_2$												
H_2SO_4												
$CaSO_4$-$2H_2O$												
HF			77	3	8		1	1		16	3	
F (sol salts)				30	28		10	12	2	54		2
$CaSiF_6$-$2H_2O$												
CaF_2												
Na_2CO_3												
H_2O (free)	15	512	68	3,677	1,459	2,721	3,672	1,450	500	2,814	7	500
Air												
Other		27										
Total	42	2,596	145	3,717	3,504	2,721	3,685	3,465	2,501	2,905	10	2,501
Wt of solids lb		2,075	0	8	2,009	0	2	2,001	1,999	18		1,999
Pct solids		79.9	0.0	0.2	57.3	0.0	0.1	57.8	79.9	0.6		79.9
Specific gravity		1.20	1.16	1.02	1.20	1.00	1.00	1.20	1.20	1.05		1.20
Density lb/ft^3		74.9	72.4	63.6	74.9	62.4	62.4	74.9	74.9	65.5		74.9

Leaching Section—Continued

	F2 Dryer air	F3 Dryer exhaust	F4 Product of HCl and/or HF leach
Composition, lb:			
Free graphite		6	1,986
Other C			
Fe			1
CaO			
SiO_2			5
MgO			
S			
HCl			
$FeCl_2$			
$CaCl_2$			
$MgCl_2$			
H_2S			
$Fe(OH)_2$			
$Ca(OH)_2$			
$Mg(OH)_2$			
H_2SO_4			
$CaSO_4$-$2H_2O$			
HF			
F (sol salts)			2
$CaSiF_6$-$2H_2O$			
CaF_2			
Na_2CO_3			
H_2O (free)		495	5
Air	18,555	18,555	
Other			
Total	18,555	19,056	2,000
Wt of solids lb			1,993
Pct solids			99.7
Specific gravity			0.33
Density lb/ft^3			20.6

Waste Treatment

Stream	D1 HCl recovery feed	D2 Thickener under-flow	D3 Hydroxide cake wash	D4 Hydroxide cake	D5 $CaCl_2$ solution	D6 Water vapor	D7 Sulfuric acid	D8 Gypsum cake wash	D9 Gypsum cake	D10 HCl makeup	D11 HCl recycle
Composition, lb:											
Free graphite	23	677		700							
Other C	13	30		43							
Fe		596		596							
CaO		309									
SiO_2	53	128		180							
MgO		130									
S		78		78							
HCl	71								23	192	797
$FeCl_2$	639										13
$CaCl_2$	336			62	885						
$MgCl_2$	163										
H_2S											
$Fe(OH)_2$				453							
$Ca(OH)_2$				73							
$Mg(OH)_2$				100							
H_2SO_4							782				
$CaSO_4$-$2H_2O$									1,350		
HF											
F (sol salts)											
$CaSiF_6$-$2H_2O$											
CaF_2											
Na_2CO_3											
H_2O (free)	5,611	5,539	1,870	1,559	2,213	9,249	33	694	578	368	2,447
Air											
Other		425									
Total	6,908	7,913	1,870	3,845	3,098	9,249	814	694	1,951	560	3,257
Wt of solids lb	89	2,374	0	2,225	0		0	0	1,350	0	0
Pct solids	1.3	30.0	0.0	58.8	0.0		0.0	0.0	69.2	0.0	0.0
Specific gravity	1.41	1.26	1.00	3.20	1.28		1.84	1.00	2.20	1.10	1.08
Density lb/ft^3	88.0	78.6	62.4	199.7	79.9		114.8	62.4	137.3	68.6	67.4

Waste Treatment—Continued

	D20 F disposal feed	D21 F disposal lime	D22 F disposal cake	D23 F disposal waste water	E1 H_2S scrubber vapor feed	E2 Scrubber soda ash	E3 Scrubber waste wash	E4 Scrubber vent
Composition, lb:								
Free graphite	17		17					
Other C	1		1					
Fe								
CaO		123						
SiO_2								
MgO								
S								
HCl	3				7			
$FeCl_2$								
$CaCl_2$				4				
$MgCl_2$								
H_2S								
$Fe(OH)_2$								
$Ca(OH)_2$								
$Mg(OH)_2$								
H_2SO_4								
$CaSO_4$-$2H_2O$								
HF	16				3			
F (sol salts)	54							
$CaSiF_6$-$2H_2O$			167					
CaF_2			55					
Na_2CO_3						119	40	
H_2O (free)	2,814		194	2,589	22	675	686	
Air					7,560			7,560
Other							61	
Total	2,905	123	461	2,592	7,612	794	786	7,560
Wt of solids lb	18	123	267	0		0	61	
Pct solids	0.6	100.0	57.9	0.0		0.0	7.8	
Specific gravity	1.05	3.10	2.60	1.00		1.20	1.15	
Density lb/ft^3	65.5	193.4	162.2	62.4		74.9	71.8	

APPENDIX B.—FLOWSHEET FOR KISH PROCESS

CONCENTRATOR SECTION

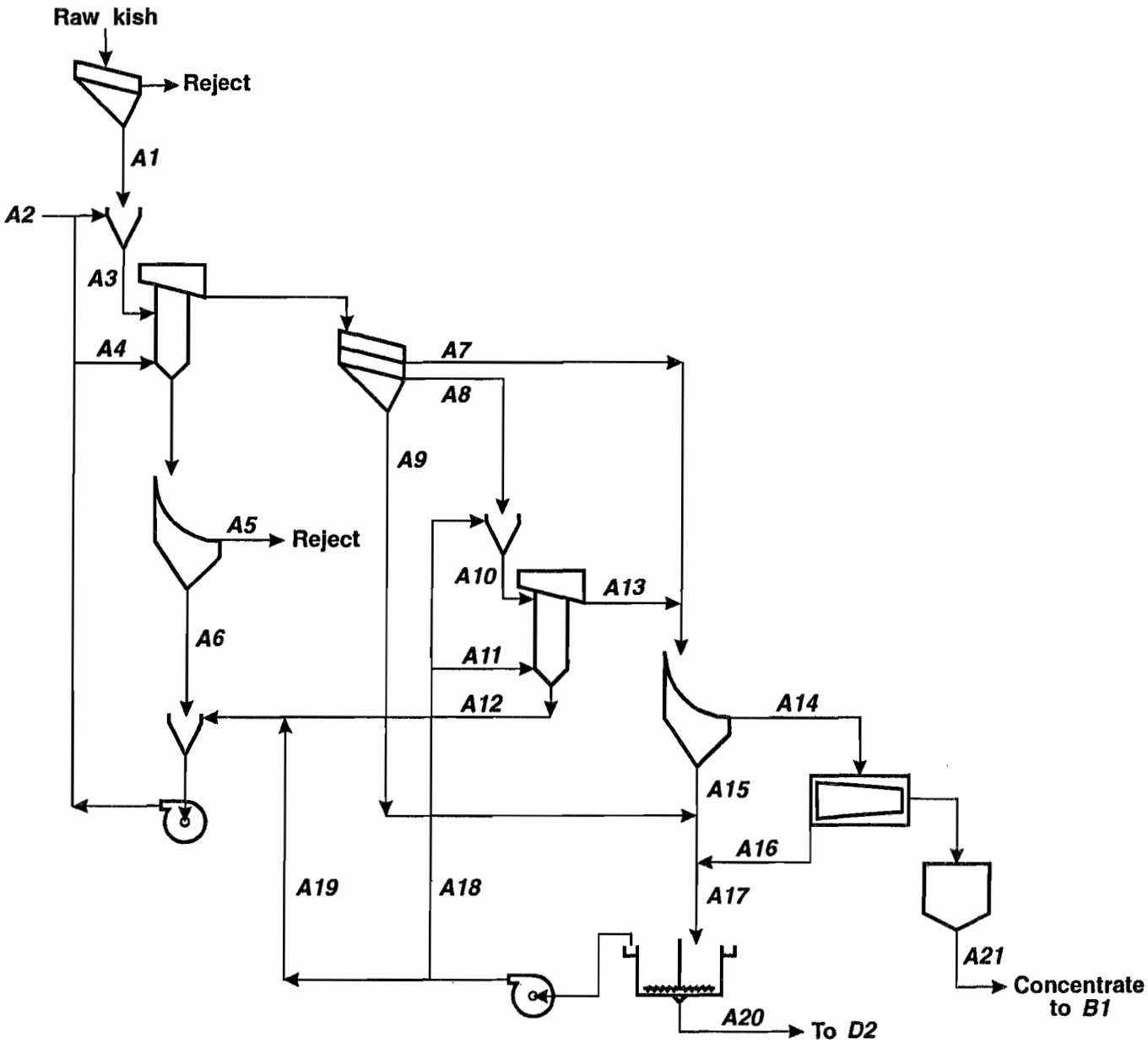

LEACHING SECTION

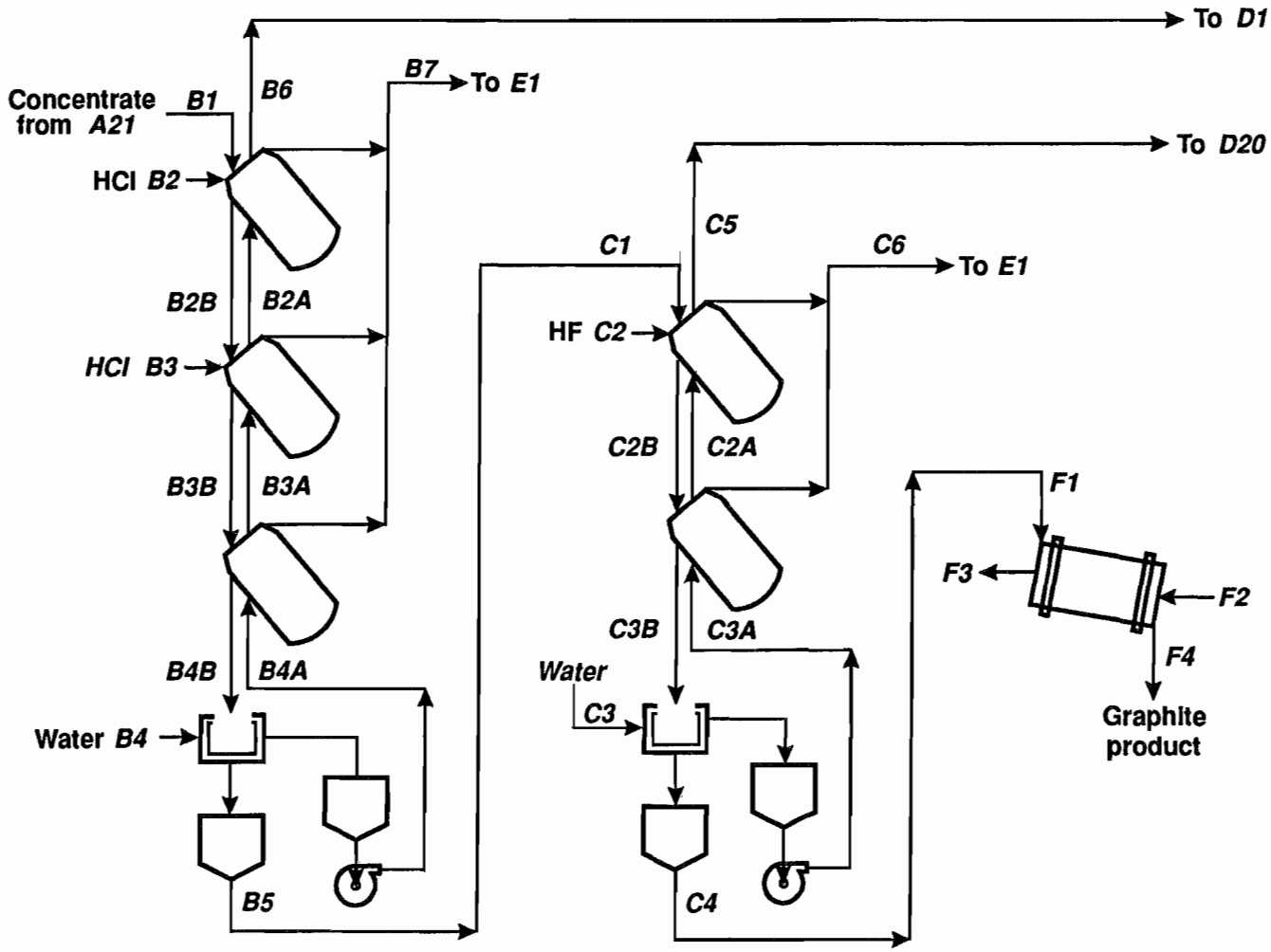
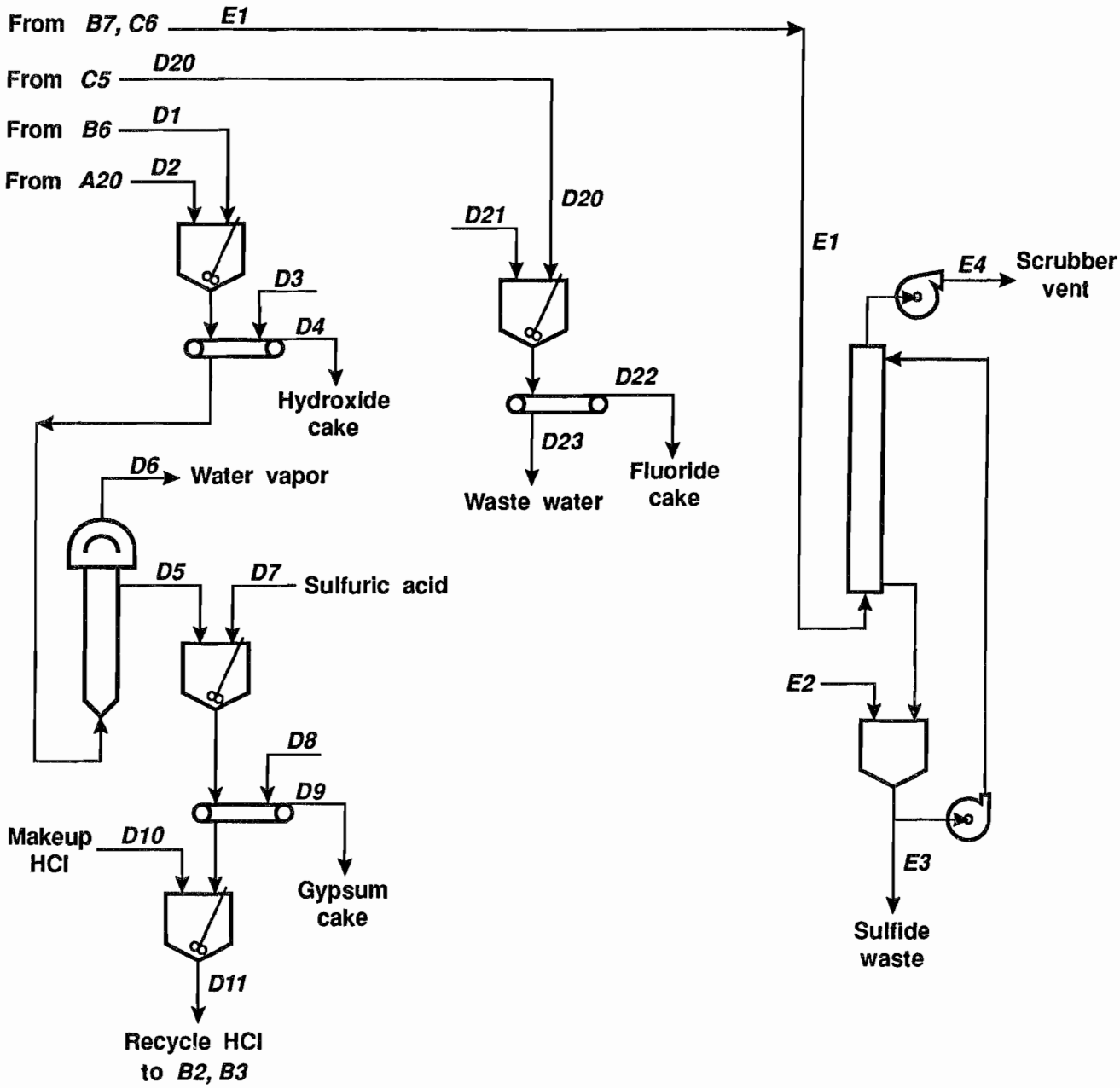
WASTE TREATMENT SECTION